UNIVERSIDAD ESTATAL PENÍNSULA DE SANTA ELENA

FACULTAD DE CIENCIAS DE LA INGENIERÍA

ESCUELA DE INGENIERÍA EN PETRÓLEO

TEMA: REDISEÑO DE LAS INSTALACIONES DE SUPERFICIE PARA EL ALMACENAMIENTO DEL COMBUSTIBLE DE AVIACIÓN (JET A-1) EN LA ESCUELA MILITAR DE AVIACIÓN "COSME RENNELLA B.", DEL CANTÓN SALINAS EN LA PROVINCIA DE SANTA ELENA

TRABAJO DE TITULACIÓN PREVIO A LA OBTENCIÓN DEL TÍTULO DE INGENIERO EN PETRÓLEO

AUTOR: WASHINGTON OMAR MASAQUIZA CULQUI

TUTOR: Ing. RAÚL MORGNER MANGOLD Msc.

LA LIBERTAD – ECUADOR

Abril 2015

UNIVERSIDAD ESTATAL PENÍNSULA DE SANTA ELENA

FACULTAD DE CIENCIAS DE LA INGENIERÍA

ESCUELA DE INGENIERÍA EN PETRÓLEO

TEMA: REDISEÑO DE LAS INSTALACIONES DE SUPERFICIE PARA EL ALMACENAMIENTO DEL COMBUSTIBLE DE AVIACIÓN (JET A-1) EN LA ESCUELA MILITAR DE AVIACIÓN "COSME RENNELLA B.", DEL CANTÓN SALINAS EN LA PROVINCIA DE SANTA ELENA

TRABAJO DE TITULACIÓN PREVIO A LA OBTENCIÓN DEL TÍTULO DE INGENIERO EN PETRÓLEO

AUTOR: WASHINGTON OMAR MASAQUIZA CULQUI

TUTOR: Ing. RAÚL MORGNER MANGOLD Msc.

LA LIBERTAD – ECUADOR

Abril 2015

La Libertad, abril del 2015.

APROBACIÓN DEL TUTOR

En calidad de Tutor del Trabajo de Investigación **REDISEÑO DE LAS INSTALACIONES DE SUPERFICIE PARA EL ALMACENAMIENTO DEL COMBUSTIBLE DE AVIACIÓN (JET A-1) EN LA ESCUELA MILITAR DE AVIACIÓN "COSME RENNELLA B."**, **DEL CANTÓN SALINAS EN LA PROVINCIA DE SANTA ELENA** elaborado por el Sr. Washington Omar Masaquiza Culqui, egresado de la Universidad Estatal Península de Santa Elena, Facultad Ciencias de la Ingeniería, Carrera de Ingeniería en Petróleo, previo a la obtención del Título de Ingeniero en Petróleo, me permito declarar que, luego de haber orientado, estudiado y revisado el proyecto, lo apruebo en todas sus partes, debido a que reúne los requisitos y méritos suficientes para ser sometido a la evaluación del tribunal.

Atentamente

……..…….

Ing. Raúl Morgner

TUTOR

La Libertad, abril del 2015

AUTORÍA DE TESIS

Yo, Washington Omar Masaquiza Culqui, con cédula de identidad Nº. 1803021698, egresado de la Universidad Estatal Península de Santa Elena, Facultad Ciencias de la Ingeniería, Carrera de Ingeniería en Petróleo, previo a la obtención del Título de Ingeniero en Petróleo, en mi calidad de Autor del Trabajo de Investigación **REDISEÑO DE LAS INSTALACIONES DE SUPERFICIE PARA EL ALMACENAMIENTO DEL COMBUSTIBLE DE AVIACIÓN (JET A-1) EN LA ESCUELA MILITAR DE AVIACIÓN "COSME RENNELLA B."**, **DEL CANTÓN SALINAS EN LA PROVINCIA DE SANTA ELENA,** me permito certificar que lo escrito en este trabajo investigativo es de mi autoría a excepción de las citas bibliográficas utilizadas en este proyecto.

Atentamente,

……..

Washington Omar Masaquiza Culqui

C.I. 1803021698

TRIBUNAL DE GRADO

Ing. Ramón Muñoz Suárez **DECANO DE LA FACULTAD**	Ing. Alamir Álvarez Loor **DIRECTOR DE LA ESCUELA DE INGENIERÍA EN PETRÓLEO**
Ing. Tarquino López C. Msc **DOCENTE DEL ÁREA**	Ing. Raúl Morgner M. Msc. **DOCENTE TUTOR**

Ab. Joe Espinoza Ayala
SECRETARIO GENERAL

DEDICATORIA

A mis padres, ya que siempre fueron y son los pilares fundamentales en el transcurso de mi vida; a ellos, por todo el esfuerzo y apoyo que me han brindado cuando me he propuesto nuevas metas.

A mi esposa que, día a día, con su esfuerzo y comprensión, me brindó ánimos e impulsos para seguir adelante en mi carrera.

A mis hijas, Natasha y Doménica, fuente de toda mi inspiración, que, con su alegría, me han permitido disfrutar de lo hermoso que es la vida día tras día.

Washington Omar

AGRADECIMIENTO

A Dios por la sabiduría que día a día me brinda; y por darme la oportunidad de cada mañana, disfrutar un día diferente; a mi tutor, el Sr. Ing. Raúl Morgner, por sus sabias enseñanzas impartidas, por la paciencia, buscando, así, mejorar y fortalecer mis conocimientos hasta culminar este proyecto.

A todo el personal docente y administrativo de la Facultad de Ciencias de la Ingeniería de la Universidad Estatal "Península de Santa Elena", especialmente a la Carrera de Ingeniería en Petróleo, por darme la apertura y brindarme la oportunidad de fortalecer todas mis habilidades y destrezas para culminar mi formación profesional.

Washington Omar

ÍNDICE GENERAL

Aprobación del tutor ii

Autoría de tesis iii

Tribunal de grado iv

Dedicatoria v

Agradecimiento vi

Índice general vii

Índice de tablas x

Índice de figuras xii

Resumen ejecutivo xv

Introducción xvi

CAPÍTULO I

GENERALIDADES

1.1 Tema de investigación 1

1.2. Planteamiento del problema 1

1.3 Justificación 8

1.4 Objetivos 10

1.4.1 General 10

1.4.2 Específicos 10

CAPÍTULO II

MARCO TEÓRICO

2.1. Procesos de refinación 11

2.2. Combustible de aviación para turbinas 13

2.2.1. Introducción 13

2.3. Proceso de obtención del combustible JET A-1 15
2.4. Especificaciones para el combustible de aviación Jet A-1 16
2.4.1. La estabilidad térmica 16
2.4.2. Punto de congelación 17
2.4.3. Gomas Existentes 18
2.5. Tanques de almacenamiento 23
2.5.1. Tipos de tanques de almacenamiento 23
2.5.2. Partes de un tanque de almacenamiento 26
2.6. Códigos aplicables al diseño y cálculo de tanques 27

CAPÍTULO III

REDISEÑO DE LOS TANQUES DE ALMACENAMIENTO

3.1. Situación actual de las instalaciones de almacenamiento 56
3.2. Diseño, dimensiones, características y accesorios del tanque 59
3.2.1. Determinación de la capacidad del tanque 59
3.2.2. Diseño del cuerpo del tanque 61
3.2.2.1. Datos y condiciones generales del diseño 61
3.2.2.2. Determinación del espesor 61
3.3. Diseño del fondo del tanque 73
3.3.1. Espesor para el fondo del tanque 73
3.4.Diseño del techo 74
3.4.1. Selección de los accesorios del techo 75
3.4.1.1. Paso de hombre 75
3.4.5. Diseño de la escalera helicoidal 89
3.4.6. Protección catódica 90
3.4.7. Protección contraincendios y derrames 90

3.5.Calibración de tanques..... 95

CAPÍTULO IV

ANÁLISIS ECONÓMICO DEL REDISEÑO

4.1. Costos de construcción 109

4.1.1.Costo directos 109

4.1.2.Costos indirectos 115

4.2. Presupuesto general para la fabricación del tanque y equipos. 115

CONCLUSIONES

RECOMENDACIONES

BIBLIOGRAFÍA

ÍNDICE DE TABLAS

Tabla 1. Plantas de procesamiento de crudo – La Libertad 2
Tabla 2. Requisitos fisicoquímicos Jet A-1 22
Tabla 3. Requerimientos API 650 para tanques de fondo plano 28
Tabla 4. Anexos para el estándar API 650 30
Tabla 5. Tamaños típicos y capacidades nominales (m^3) para tanques con 60
Tabla 6. Características físicas de los tanques 60
Tabla 7. Espesor de la placa del cuerpo (mm) para tamaños típicos de 62
Tabla 8. Espesores de la plancha respecto al diámetro del tanque 63
Tabla 9. Esfuerzos de Diseño y Prueba Hidrostática del material del cuerpo 64
Tabla 10. Espesores calculados y adoptados para el cuerpo de los tanques 66
Tabla 11. Selección de pernos y orificios para pasos de hombres del cuerpo 68
Tabla 12. Espesor de tapa y brida empernada del paso de hombre 69
Tabla 13. Dimensiones de espesores para cuellos de pasos de hombre 69
Tabla 14. Datos de la boquilla de salida de combustible para el cuerpo. 70
Tabla 15. Datos de la boquilla de entrada de combustible para el cuerpo 71
Tabla 16. Datos de la boquilla del cuerpo para el drenaje de combustible 71
Tabla 17. Dimensiones para la brida de la boquilla de salida 72
Tabla 18. Dimensiones para la brida de la boquilla de entrada 73
Tabla 19. Espesor (t_b) de la placa anular de fondo (SI) 73
Tabla 20. Dimensiones para pasos de hombre en techos de tanques (SI) 76
Tabla 21. Dimensiones de las boquillas bridadas para techos (SI) 77
Tabla 22. Dimensiones para el sumidero de fondo (SI) 79
Tabla 23. Dimensiones de los perfiles de coronamiento para tanques 89
Tabla 24. Costos del fondo de los tanques 110
Tabla 25. Costos del cuerpo de los tanques 110
Tabla 26. Costos del techo de los tanques 111
Tabla 27. Costos del ángulo de rigidez 111
Tabla 28. Costos del paso de hombre del cuerpo 111
Tabla 29. Costos del paso de hombre del techo 111
Tabla 30. Costos de la boca de medición/aforo del techo 112

Tabla 31. Costos del venteo del techo 112
Tabla 32. Costos de boquilla de carga del tanque 112
Tabla 33. Costos de boquilla de descarga del tanque 112
Tabla 34. Costos de la escalera helicoidal del tanque 113
Tabla 35. Costos de los pasamanos de seguridad del tanque 113
Tabla 36. Costos del sandblasting y pintura de las superficies del tanque 113
Tabla 37. Costos de válvulas y medidores 114
Tabla 38. Costos de inspección de juntas soldadas y pruebas del tanque 114
Tabla 39. Costo de calibración de tanques 114
Tabla 40. Costos documentación 115
Tabla 41. Desglose de costos indirectos 115
Tabla 42. Presupuesto general para la fabricación de cada tanque 116

ÍNDICE DE FIGURAS

Figura 1. Ubicación geográfica de la ESMA "Cosme Rennella B." 8
Figura 2. Juguete de Hero 13
Figura 3. Clasificación de los tanques de almacenamiento en general 25
Figura 4. Partes principales de un tanque de almacenamiento 26
Figura 5. Juntas verticales del cuerpo 46
Figura 6. Juntas horizontales del cuerpo 46
Figura 7. Juntas traslapadas y de tope al fondo 47
Figura 8. Nomenclatura de los niveles de líquido en los tanques. 51
Figura 9. Dimensiones de filete de soldadura para el cuerpo 54
Figura 10. Infraestructura actual de los tanques de JET A1. 56
Figura 11. Pérdida de espesor de las láminas del tanque 57
Figura 12. Boca de llenado de los tanques de combustible 57
Figura 13. Conexión a tierra y Manguera de llenado 58
Figura 14. Medidor de nivel inadecuado 58
Figura 15. Extintor inapropiado para casos de emergencia 59
Figura 16. Partes del paso de hombre para el cuerpo del tanque 67
Figura 18. Tipo de soldadura para el cuello del Paso de Hombre 68
Figura 19. Modelo de la boquilla y placa de refuerzo tipo diamante 72
Figura 20.Esquema de la sección cuerpo-techo 75
Figura 21. Dimensiones del paso de hombre para techo 76
Figura 22. Nomenclatura de las boquillas para techos 77
Figura 23. Dimensiones y nomenclatura para el sumidero de fondo 78
Figura 24. Área de compresión de la unión cuerpo-techo. 80
Figura 25. Extintor de polvo químico seco - 20 libras 92
Figura 26. Extintor de dióxido de carbono – 50 libras 93
Figura 27. Rociador estandar tipo montante 93
Figura 28. Distribución del sistema contraincendios fijo y móvil. 95

ABREVIATURA

API	American Petroleum Institute
atm	Atmósfera
Bbl/día	barriles por día
C	Capacidad del tanque
CA	Corrosión Admisible
CSA	Canadian Estandars Association
Cst	Centistoke
D	Diámetro interior del tanque
EN	European Standards
ESMA	Escuela Militar de Aviación
FCC	Fluid Catalytic Cracking
ft	Pie
G	Gravedad Específica
g	Gramo
H	Altura del tanque
INEN	Instituto Ecuatoriano de Normalización
ISO	International Organization for Standardization
JP	Jet Propellant
Kg	Kilogramo
Kpa	Kilopascal
lb	Libra
m	Metro
mg	Miligramo
mgKOH	Miligramos de hidróxido de potasio
MJ	Mega Joule
mm	Milímetro
mmHg	Milímetros de mercurio
NPS	Nominal Pipe Size
NS	Sin Especificación
NTE	Norma Técnica Ecuatoriana
ppm	Partes por millón

ps	Picosegundos
RT	Temperatura Ambiente
S_d	Esfuerzo máximo permisible para diseño
S_f	Resistencia a la fluencia
S_t	Esfuerzo máximo permisible prueba hidrostática
S_{tr}	Resistencia a la tracción
t_d	Espesor de diseño del cuerpo
t_n	Mínimo espesor del cuello
t_t	Espesor del cuerpo
%V	Porcentaje en volumen
°C	Grados centígrados
°F	Grados Fahrenheit

UNIVERSIDAD ESTATAL PENÍNSULA DE SANTA ELENA
FACULTAD DE CIENCIAS DE LA INGENIERÍA
CARRERA DE INGENIERÍA EN PETRÓLEO

REDISEÑO DE LAS INSTALACIONES DE SUPERFICIE PARA EL ALMACENAMIENTO DEL COMBUSTIBLE DE AVIACIÓN (JET A-1) EN LA ESCUELA MILITAR DE AVIACIÓN "COSME RENNELLA B.", DEL CANTÓN SALINAS EN LA PROVINCIA DE SANTA ELENA.

Autor: Washington Omar Masaquiza Culqui
Tutor: Ing. Raúl Morgner M. Msc.

RESUMEN EJECUTIVO

El presente trabajo investigativo se basa en el Rediseño de las Instalaciones de Superficie para el Almacenamiento del Combustible de Aviación (Jet A-1), por lo que se presenta el diseño de tanques para su adecuado almacenamiento. Se basa en normas de organizaciones internacionales que garantizan la correcta selección, esencialmente la Norma API650, teniendo en cuenta el promedio de las cantidades de combustibles consumidas durante los últimos tres años.

El rediseño que se propone en el presente trabajo permitirá que las instalaciones en las cuales se almacena el Jet A-1 garanticen las condiciones necesarias para mantener la calidad y cantidad del combustible requerido.

Este proyecto es aplicable en las instalaciones de la ESMA y busca servir como modelo para el rediseño y modernización de las instalaciones de superficie en las unidades militares que, actualmente, almacenan JET A-1.

INSTALACIONES DE SUPERFICIE	TANQUES DE ALMACENAMIENTO	NORMA API650

INTRODUCCIÓN

En el actual ámbito industrial, numerosas empresas disponen de instalaciones para el almacenamiento de derivados del petróleo, el que constituye un elemento vital y estratégico que, por medio de procesos de refinación, ha permitido la obtención de combustibles, entre los cuales se tiene el Jet- A1 para el servicio de aviones que funcionan con turbinas.

El almacenamiento de combustibles se lo realiza a través del uso de tanques que deben cumplir una serie de especificaciones dependientes de las propiedades de los diferentes derivados que se requiera almacenar. Con el objeto de hacer con estos elementos una herramienta eficaz en las industrias o en entidades privadas o públicas que trabajan con estos productos, se requiere determinar en laboratorios acreditados las propiedades físicas de los combustibles y las pruebas de rigor, cumpliendo exigentes normas NTE INEN, que permitan optimizar la calidad y cantidad del producto a obtenerse, previa su utilización en máquinas, vehículos o aviones.

Las propiedades físico-químicas y termodinámicas de los derivados del petróleo son muy importantes; pues, con su determinación se garantizará que cumplan las normas de calidad y reducción de la merma en los tanques de almacenamiento dispuestos para el efecto.

El JET A-1, también conocido como “Aerocombustible”, es uno de los más usados en la transportación aérea. El cuidado en el manejo, cumplimiento de especificaciones técnicas y medidas de seguridad aplicadas, son algunos de los parámetros más importantes que se debe verificar con el fin de garantizar

operaciones aéreas normales con la eficiente administración de este importante producto, sumamente necesario en las operaciones de la Escuela Militar de Aviación “Cosme Rennella B.”.

La finalidad principal del tipo de almacenamiento seleccionado es evitar las pérdidas por evaporación y la contaminación del combustible con otros fluidos o partículas sólidas. Es por esto que se inspecciona, periódicamente, los tanques, y, dada la antigüedad de los mismos, el incremento de las operaciones aéreas por la modernización del aeropuerto de Salinas, amerita el rediseño de todas las instalaciones de superficie que posee la ESMA, de manera que se cumpla con las normas NTE INEN e internacionales, en especial las que tienen relación con la calidad de los productos, para lo cual los laboratorios de las refinerías emiten los certificados respectivos, garantizando la excelencia del combustible.

CAPÍTULO I

GENERALIDADES

1.1 Tema de investigación

REDISEÑO DE LAS INSTALACIONES DE SUPERFICIE PARA EL ALMACENAMIENTO DEL COMBUSTIBLE DE AVIACIÓN (JET A-1) EN LA ESCUELA MILITAR DE AVIACIÓN "COSME RENNELLA B.", DEL CANTÓN SALINAS EN LA PROVINCIA DE SANTA ELENA

1.2. Planteamiento del problema

1.2.1 Contextualización

La aviación es uno de los medios de transporte más seguros en comparación con otros sistemas de transporte. Moviliza un gran porcentaje de personas, tanto a nivel nacional como internacional, usando tecnología de punta en todos sus ámbitos. Debido a esto, es de suma importancia garantizar esa seguridad en todas las operaciones.

En un análisis realizado en la ESMA, las aeronaves que operan con Jet A-1 como elemento principal en su “sistema de combustible”, no poseen un campo auxiliar que detecte si la calidad del producto con el que fue abastecido llegará a afectar la operación del motor, ocasionando su mal funcionamiento y con posibles repercusiones de graves accidentes con pérdidas materiales y humanas.

El combustible JET A-1, desde su procesamiento hasta su entrega a las aeronaves como estación final para su uso, debe ser monitoreado y controlado en cada punto

de despacho (tanques de refinería) y recepción (tanques de bases militares), de tal manera que se garantice la calidad y la cantidad en función a las especificaciones técnicas requeridas.

En el Ecuador, para el almacenamiento de combustibles, la mayoría de las instalaciones están a cargo de EP Petroecuador, dirigida por la Gerencia de Transporte que es la encargada de la logística del crudo y sus derivados, así como de su almacenamiento.

En la provincia de Santa Elena, opera la refinería de La Libertad, que tiene como función industrializar el petróleo mediante los procesos de refinación para producir derivados que permitan satisfacer la demanda interna del país.

Esta refinería está constituida por tres plantas industriales, que se muestran en la Tabla 1.

Tabla 1. Plantas de procesamiento de crudo – La Libertad

Nombres de las plantas	Capacidad de procesamiento (Bbl/Día)
PARSONS	26500
UNIVERSAL	10000
CAUTIVO	9500
TOTAL	46000

Elaborado por: El autor

A las plantas Parsons y Universal, las separa una distancia de cincuenta metros; operan independientemente y son las unidades que revertió la empresa Anglo al Estado ecuatoriano en 1989. La planta Cautivo está situada a unos 2 Km de las

otras unidades, en la vía La Libertad-Ballenita. También, trabaja en forma independiente. Fue revertida en 1990 al país por caducidad del contrato.

En los patios de las indicadas refinerías, se puede observar tanques de almacenamiento de diferentes formas y capacidades para los distintos tipos de productos que se procesa en dichas unidades.

Las aeronaves usan combustibles de acuerdo a las características de combustión de sus motores. En la actualidad, se tiene dos clases de motores; uno, tipo pistón y el otro, tipo Jet. Su principal diferencia consiste en que el de pistón opera mediante combustión intermitente, y, en el caso del Jet A-1, el proceso es continuo. Por esta razón, dichos motores tienen diferentes requerimientos de calidad según el tipo de combustible.

Por otro lado, en los motores a pistón, la sincronización de la combustión es crítica para obtener su buen rendimiento, y su eficiencia disminuye con la altura. Cuando la combustión es continua, la sincronización de la combustión ya no es importante, y su eficiencia mejora con la altura.

En los motores Jet, partículas pequeñas de carbón se pueden formar tempranamente en el proceso de combustión, las mismas que tienden a quemarse una vez que pasan a través de la cámara de fuego, y son consumidas bajo condiciones ideales. De no ser consumidas completamente, podrían ser perjudiciales para los estatores y alabes, trayendo como consecuencia el fenómeno de la erosión. Además, podrían taponar los conductos de la cámara de

combustión, obstruyendo el ingreso del aire requerido para llevar a cabo eficientemente el proceso de ignición.

En la Escuela Militar de Aviación “Cosme Rennella B.”, algunas aeronaves usan motores de turbina que requieren combustible tipo JET A-1. Por esta razón, es necesario que existan instalaciones adecuadas para el almacenamiento de dicho producto, y que proporcionen excelente calidad, de acuerdo a las especificaciones o normas que son aplicadas y que constan en los respectivos certificados de calidad, que se emite previo el despacho del combustible.

1.2.2 Análisis Crítico

La Escuela Militar de Aviación “Cosme Rennella B.” cuenta con tres tanques para el almacenamiento de combustible de aviación JET A-1, cada uno con 13.300 galones de capacidad. No cuenta con información actualizada del diseño original y, tampoco, tiene sistemas adecuados de seguridad contra incendio, señalización e identificación que garanticen operaciones eficientes y confiables. Por esto, es necesario el rediseño de las instalaciones de almacenamiento del indicado producto, que permita reemplazar la tanquería antigua por nuevas unidades, incrementar la capacidad de almacenamiento, montar sistemas modernos que brinden seguridad operativa, minimizar cualquier posibilidad de contaminación por agentes externos, instalar nuevos sistemas de recepción y despacho del combustible con los accesorios adecuados para facilitar las operaciones aéreas en forma segura, evitando posibles derrames o pérdidas del Jet A-1. Estas nuevas instalaciones, debidamente calibradas por una empresa acreditada, deben disponer

de sitios de purga para detectar y eliminar la presencia de agua y sedimentos. También, requiere puntos de medición para la respectiva cuantificación de las existencias, recepciones y despachos, por medio de sistemas estáticos y/o dinámicos. Por otro lado, debe montarse modernos sistemas de tomas de muestras, para hacer pruebas de control de calidad que garanticen que los productos se encuentren en especificación.

1.2.3 Prognosis

Si no se lleva a cabo el rediseño de los tanques de almacenamiento de combustible JET-A1 para la ESMA, debido al incremento de las operaciones aéreas por la modernización de la pista de aterrizaje, terminal aéreo, en un futuro próximo, colapsaría la capacidad de almacenaje del indicado producto y, también, habría riesgos de que se produzcan derrames o contaminaciones por la marcada antigüedad de los tanques e instalaciones.

1.2.4 Formulación del problema

¿Cómo el rediseño de las instalaciones de superficie para el combustible de aviación JET-A1 proporcionará mayor capacidad de almacenamiento, facilidad de operación y seguridad para la Escuela Militar de Aviación “Cosme Rennella B.”?

1.2.5 Preguntas directrices

- ✓ ¿Qué beneficios se obtendrá con el rediseño de las instalaciones de superficie para el almacenamiento del combustible de aviación JET-A1?

- ✓ ¿El actual diseño de las instalaciones está basado en alguna norma nacional o internacional relacionada con la industria petrolera?

- ✓ ¿El diseño actual consta de todos los equipos, accesorios (válvulas, codos, bombas, filtros, tuberías, medidores y conexiones) para la operación eficiente del terminal de almacenamiento del combustible de aviación?

- ✓ ¿En otras localidades de la Fuerza Aérea, existen nuevos diseños de tanques de almacenamiento que sirvan como referencia para modernizar o rediseñar las nuevas instalaciones de superficie a construirse en el cantón Salinas?

- ✓ ¿Con el rediseño de las instalaciones de superficie, reduciría el peligro de que se produzcan siniestros, posibles derrames o contaminaciones del combustible?

1.2.6 Delimitación del objeto de la investigación

El estudio se realizará en las instalaciones de la Escuela Militar de Aviación "Cosme Rennella B. con la información proporcionada por la Sección Abastecimientos del Departamento Logístico ESMA, situada en el lugar actual de almacenamiento del combustible JET A-1.

- ❖ **CAMPO:** Ingeniería.

- ❖ **ÁREA:** Instalaciones de superficie.

- **ASPECTO:** Rediseño de instalaciones de superficie.

- **TEMA:** Rediseño de las Instalaciones de Superficie para el Almacenamiento del Combustible de Aviación (Jet A-1) en la Escuela Militar de Aviación "Cosme Rennella B.", del Cantón Salinas en la provincia de Santa Elena

- **PROBLEMA:** ¿Cómo el rediseño de las instalaciones de superficie para el combustible de aviación JET-A1 proporcionará mayor capacidad de almacenamiento, facilidad de operación y seguridad para la Escuela Militar de Aviación “Cosme Rennella B.”?

- **DELIMITACIÓN TEMPORAL:** La investigación se realizará en el período septiembre - diciembre 2014.

- **DELIMITACIÓN POBLACIONAL:** Encargados del manejo del combustible y usuarios de las aeronaves de la ESMA.

- **DELIMITACIÓN ESPACIAL:** Escuela Militar de Aviación "Cosme Rennella B.", del cantón Salinas, provincia de Santa Elena, sector Chipipe, avenida Séptima y calle Atahualpa S/N.

Figura 1. Ubicación geográfica de la ESMA "Cosme Rennella B."

Fuente: http://www.googlemaps.com

- **DELIMITACIÓN CONTEXTUAL:** El objetivo del estudio tiene como finalidad el rediseño de las instalaciones de superficie para el almacenamiento del combustible de aviación JET A-1 en la ESMA, en el Cantón Salinas.

1.3 Justificación

El JET A-1, se usa en los aviones que funcionan por medio de turbinas diseñadas para trabajar de forma segura y eficiente a grandes alturas. El sistema de alimentación de combustible funciona dentro de amplios límites de temperatura y presión. Estas condiciones extremas descartan el uso de fracciones pesadas como

diésel o fuel oil porque se congelan a bajas temperaturas, solidificándose fácilmente, al igual que las fracciones ligeras debido a que se evaporan a grandes altitudes.

Justifican también el rediseño los siguientes aspectos:

La **importancia** que conlleva el almacenamiento del indicado combustible de aviación para las operaciones aéreas que se realiza en la ESMA.

La **necesidad** de reemplazar la tanquería e instalaciones antiguas por nuevas unidades, incrementando la capacidad de almacenamiento del producto. El montaje de sistemas modernos que brinden seguridad operativa minimizando cualquier posibilidad de contaminación por agentes externos, por lo que se requiere instalar nuevos sistemas de recepción y despacho del combustible con los accesorios adecuados para facilitar las operaciones aéreas en forma segura, evitando posibles derrames o pérdidas del Jet A-1.

El proyecto es **factible** porque se aplica a una problemática real, esto es, el urgente montaje de nuevas instalaciones de almacenamiento del Jet A-1 en reemplazo de las anticuadas y obsoletas construcciones que datan de la segunda guerra mundial. De esta forma, se podrá dar servicio a numerosas aeronaves comerciales y militares que operan en este sector de la patria y cuyo movimiento tiende a incrementarse en función de los trabajos de ampliación del nuevo terminal y del turismo creciente a lo largo del año, en especial en temporada de playa.

1.4 Objetivos

1.4.1 General

Diseñar dos tanques de almacenamiento para una capacidad operativa total de 55.000 galones de combustible de aviación Jet A-1 con todos los accesorios de control y seguridad para la operación de las aeronaves militares de la ESMA.

1.4.2 Específicos

- Definir el tipo, diseño, construcción, operación y mantenimiento de dos tanques de acero basados en la Norma API 650, a montarse en la base militar para el almacenamiento de combustible Jet A-1, de acuerdo a las normas nacionales e internacionales vigentes.

- Identificar los posibles contaminantes que podrían afectar al combustible Jet A-1.

- Detectar los factores que pueden influir en la merma de calidad del combustible durante su etapa de almacenamiento.

CAPÍTULO II

MARCO TEÓRICO

2.1. Procesos de refinación

En la Norma Técnica Ecuatoriana NTE INEN 2341: 2013 "Derivados del petróleo. Productos relacionados con el petróleo y afines. Definiciones", se encuentran publicados varios términos que están relacionados a la refinación y a sus procesos. Estas definiciones expresan lo siguiente:

> **"3.1.4.9. Refinería: Instalación industrial destinada al proceso del petróleo"**

> **"3.4.2. Refinación: conjunto de procesos mediante los cuales los hidrocarburos constitutivos del petróleo se separan y se transforman individualmente o en fracciones, para su posterior aprovechamiento"**

> **"3.4.3. Destilación: proceso físico al que se somete al petróleo para separar sus distintas fracciones, las que se diferencian por sus temperaturas de ebullición. Se clasifican en dos tipos: Destilación Atmosférica y Destilación al Vacío."**

> **"3.4.3.1. Destilación Atmosférica: proceso de destilación del petróleo a presión atmosférica." (**Proceso que se lleva a cabo en las plantas industriales existentes en La Libertad: Parsons, Universal y Cautivo**)**

> **"3.4.3.2. Destilación al Vacío: proceso de destilación del crudo reducido a presiones inferiores a la atmosférica." (**Proceso que se emplea en la Refinería de Esmeraldas)

Los términos arriba mencionados describen los procesos primarios y secundarios de la obtención de los derivados a través de la refinación. El diagrama de flujo para los procesos en las plantas ubicadas en La Libertad se encuentra detallado en el Anexo "A" de este trabajo.

2.1.1. Combustibles de aviación derivados del petróleo

En la aviación, la fuerza motriz se basa en el uso de combustibles derivados del petróleo por sus reconocidas ventajas, esto es, los productos líquidos contienen mayor cantidad de energía por unidad de volumen que los gases, y son de más fácil manipulación y distribución que los sólidos.

El rendimiento, propiedades, especificaciones, composición y elaboración de los combustibles de aviación, específicamente el AV-GAS (Aeronaftas de 130 octanos para avionetas) y el JET FUEL A-1 (para aviones a turbinas), son de gran importancia debido a que los motores y el combustible son componentes interdependientes de un sistema único, por lo que es necesario tener un especial cuidado en las etapas de procesamiento, distribución, transporte y almacenaje para asegurar la calidad y pureza cuando se lleva el combustible desde los tanques de almacenamiento de las refinerías a los existentes en la base militar "Cosme Rennella" y, posteriormente, hasta los aviones.

La seguridad tiene prioridad sobre otros factores de funcionamiento de los motores de aviación ya que una falla en el motor, por la mala calidad del combustible, puede ocasionar resultados fatales, a diferencia de una falla en automotores que, máximo, ocasiona una parada del vehículo en tierra.

2.2. Combustible de aviación para turbinas

2.2.1. Introducción

La propulsión JET se remonta hasta el primer siglo A.C. cuando un egipcio, Hero, crea un juguete que usaba el chorro de vapor para hacer girar una esfera.

Figura 2. Juguete de Hero

Fuente: Aviation Fuel Technical Review, Chevron 2006

El desarrollo de un motor tipo turbina para aviones se inició independientemente entre Alemania y el Reino Unido en el año 1930. En Alemania, Hans Von Ohain diseñó el motor que propulsó al primer vuelo JET en 1939. A finales de la Segunda guerra mundial, en este mismo país, se desplegó, con gran éxito, el avión Messerschmitt 262.

En el Reino Unido, Frank Whittle obtuvo la patente de un motor a turbina en 1930. Luego, un avión potenciado por un motor que él diseñó voló en 1941. El primer caza JET británico, el Gloster Meteor, voló a finales de la Segunda guerra mundial.

El queroseno para iluminación, fabricado para las lámparas de mecha, fue usado ampliamente para los primeros motores a turbina. Este combustible lo mezclaban con otros cortes de productos para obtener un combustible jet de mayor potencia que, una vez probados, presentó las siguientes desventajas:

- Grandes pérdidas debido a la evaporación a grandes altitudes
- Elevado riesgo de que se produzca un incendio en la operación en tierra.
- Los aviones accidentados que funcionaban con este tipo de combustible de amplio corte registraron menos sobrevivientes en caso de catástrofes.

En los comienzos de la aviación militar, se usó varios tipos de combustibles para turbinas, como son: JP-4, JP-8 y JP-5, actualmente en desuso. A medida que la aviación comercial se fue desarrollando, el combustible tipo queroseno fue escogido por tener las mejores propiedades técnicas y de seguridad.

Un combustible Jet-B de mayor volatilidad es usado en climas muy fríos (Alaska), mientras que los combustibles con base en queroseno Jet A y Jet A-1 son de mayor empleo en el resto del mundo.

La principal diferencia es que el jet A-1 tiene un punto máximo de congelamiento más bajo (-40ºC) que el Jet A (-46ºC). Este punto de congelamiento que posee el Jet A-1 es ideal para viajes para grandes altitudes y climas variables, en especial en rutas polares durante el invierno.

2.3. Proceso de obtención del combustible JET A-1

El combustible JET-A1 se obtiene a través del proceso de refinación del petróleo, el cual se lo realiza mediante operaciones unitarias.

Las unidades de refinación atmosféricas están basadas en procesos térmicos, y, por medio de la destilación a altas temperaturas, fracciona el crudo para obtener los diferentes derivados, que van, desde los más livianos hasta los más pesados, es decir, de los más simples a los más complejos. El combustible de aviación Jet A-1 se obtiene de las fracciones medias procedentes de la destilación atmosférica, que es la primera etapa del refino del petróleo, que lo vaporiza y separa mediante la condensación a diferentes temperaturas, obteniéndose, entre una de ellas, el queroseno.

El Jet A-1 es una mezcla de hidrocarburos que van, desde el C_9 hasta el C_{17}, en cuya composición, se tiene:

- Fracciones primarias de la destilación del petróleo (straight-run)
- Fracciones primarias hidrotratadas (eliminación del azufre)
- Fracciones de conversión (FCC, Visbreaking, etc.)

Según la norma NTE INEN 2341, se define los términos siguientes:

> "**3.5.6. Destilados medianos: corresponden al queroseno, diésel y ciertos gasóleos cuyos puntos de destilación están comprendidos entre 150ºC y 400ºC.**"

"<u>3.10.61. Rango de destilación</u>: variación de la temperatura que caracteriza a una fracción de destilación por medio de sus puntos de ebullición inicial y final, determinada mediante procedimientos normalizados."

"<u>3.10.45. Punto inicial de destilación</u>: temperatura determinada (corregida a 0ºC y 101,325 KPa) en el momento en que la primera gota de destilado desciende desde el extremo del condensador."

"<u>3.10.46. Punto final de destilación</u>: temperatura máxima determinada (corregida a 0ºC y 101,325 KPa) en el momento en que la última gota del condensado desciende desde el extremo del condensador."

2.4. Especificaciones para el combustible de aviación Jet A-1

Las especificaciones NTE INEN son normas técnicas por las cuales las refinerías y los usuarios del Jet A-1 identifican y controlan sus propiedades para que estén dentro de los rangos de tolerancia; propiedades que son imprescindibles para garantizar la confiabilidad y seguridad del consumo de dicho combustible por las aeronaves.

Para tener una idea de la calidad del producto, que la refinería despacha desde sus instalaciones, a continuación, se detalla tres de los más importantes parámetros.

2.4.1. La estabilidad térmica

Un combustible estable es aquel cuyas propiedades permanecen constates. El factor que produce cambios en las propiedades del combustible es la exposición que tiene a las altas temperaturas que produce el motor.

La inestabilidad del combustible Jet implica varias reacciones químicas, algunas de las cuales son las reacciones de oxidación. Hidroperóxidos y peróxidos son los productos de reacciones iniciales, que permanecen disueltos en el combustible y pueden acortar la vida de algunos elastómeros en el sistema. En otras reacciones adicionales, se forman gomas solubles y partículas insolubles. Estos productos pueden obstruir los filtros del combustible o depositarse sobre las superficies de los sistemas, restringiendo el flujo en tuberías de diámetro pequeño.

El calentamiento del combustible acelera las reacciones de formación de gomas y partículas, las cuales se pueden depositar en los accesorios siguientes:

- Filtros de combustible, la caída de presión a través del filtro y la eminente reducción del flujo de combustible.
- Boquillas de los inyectores de combustible, alterando la pulverización, que puede conducir a puntos calientes en la cámara de combustión.
- Control principal del motor, interfiriendo el flujo de combustible y el sistema de control del motor.
- Intercambiadores de calor, reduciendo la eficiencia de la transferencia de calor y el flujo de combustible.

2.4.2. Punto de congelación

Los combustibles son una mezcla de hidrógeno y carbono, y cada uno tiene su propio punto de congelación. Cuando un combustible es sometido a bajas

temperaturas, los compuestos con puntos de congelación más altos se solidifican primero, formando una especie de cristales de cera.

El punto de congelación de un combustible Jet A-1 se define como "la temperatura a la cual los cristales del combustible que se forman por el enfriamiento de la muestra desaparecen cuando la misma es sometida a calentamiento" (INEN, 2006)

Para la "Determinación del Punto de Congelación de combustibles de aviación", la Norma Técnica Ecuatoriana **NTE INEN 2070: 2006** de "Productos derivados del petróleo Jet-A1. Requisitos", exige llevar a cabo una prueba para determinar este parámetro con base en la norma **ASTM D 2386,** la cual describe el siguiente procedimiento, "Una muestra es colocada en un tubo especial encamisado, equipado con una varilla de agitación y un termómetro".

El tubo es colocado en un baño (a baja temperatura), se agita mientras la muestra se enfría, y, en el momento en que aparecen los cristales de hidrocarburos, se remueve el tubo del baño frio. Las agitaciones continuas permiten que la muestra alcance lentamente la temperatura ambiente. Cuando los cristales de hidrocarburos desaparecen completamente, se anota como Punto de Congelación de la muestra.

2.4.3. Gomas Existentes

El contenido de gomas existente en los combustibles se determina por el residuo resultante de la evaporación de un producto.

El método de prueba estándar ASTM D 381, permite la determinación del "Contenido de gomas en combustibles Jet A-1"; mediante el análisis de una determinada cantidad de combustible, la misma que se deposita en un recipiente calibrado, que es colocado en un baño caliente, para luego ser evaporado por el paso de un flujo de vapor. El residuo resultante de este proceso se pesa y el valor registrado se toma como la cantidad de gomas existentes en dicho combustible.

Dos organizaciones están encargadas de mantener y actualizar las especificaciones para los combustibles de aviación usados para motores de avión a turbina, que son:

- La American Society for Testing and Materials (ASTM), y
- La United Kingdom Ministry of Defense (MOD).

Las especificaciones emitidas por estas dos organizaciones son similares. Algunos países publican sus propias especificaciones nacionales para el Jet A-1 que están basadas en las normas ASMT y las MOD.

En el Ecuador, el Instituto Ecuatoriano de Normalización (INEN) es el encargado de emitir las especificaciones nacionales para el Jet A-1.

En la primera edición de Norma Técnica Ecuatoriana NTE INEN 2070: 2006**,** se encuentran publicados los "Requisitos fisicoquímicos para el combustible de aviación Jet-A1".

En este documento, constan los requisitos complementarios como son:

"**5.2.1.1. El almacenamiento, transporte y distribución, se debe realizar de acuerdo al reglamento correspondiente expedido por la Dirección de Aviación Civil."**

Para la inspección, según la norma **NTE INEN 2070: 2006,** se toma en cuenta el muestreo y aceptación o rechazo:

"6.1.1. El muestreo, inspección y recepción deberá realizarse de acuerdo con la NTE INEN 930."

"6.2.1. Aceptación o rechazo: si la muestra ensayada no cumple con uno o más de los requisitos establecidos en el numeral 5 de la norma, se extraerá una nueva muestra y se repetirá los ensayos en cuestión."

"**6.2.2. Si alguno de los ensayos no cumpliera con los requisitos, se rechazará el lote correspondiente."**

"6.2.3. No obstante a lo anterior, el vendedor podrá optar por pedir una nueva extracción de muestra, mediante un árbitro designado de común acuerdo entre las partes."

Para el envasado del Jet A-1, la norma **NTE INEN 2070: 2006,** emite que se debe considerar lo siguiente:

"7.1. El producto envasado para uso inmediato, se distribuirá en canecas metálicas, en forma tal que se garantice la seguridad del producto y de las personas que lo manejan en cualquier paso de su utilización."

"7.2. El producto envasado para almacenamiento temporal deberá realizarse en tanques metálicos de acero inoxidable o aluminio."

"7.3. El producto envasado por un tiempo mayor a 90 días, previamente a su uso, deberá someterse a los análisis fisicoquímicos correspondientes para verificar que no haya cambios apreciables en su composición."

Para el rotulado, según la norma **NTE INEN 2070: 2006,** se debe cuidar que:

"<u>8.1.</u> Cuando el producto sea transportado en carros cisternas, cada vehículo deberá llevar, impresas y en forma visibles, las indicaciones siguientes."

"**<u>8.1.1.</u> "Líquido inflamable."**

"<u>8.1.2."</u> No apagar con agua."

"<u>8.1.3</u>. El dibujo de una llama de fuego."

"<u>8.1.4.</u> El tamaño de las letras de las indicaciones anteriores no deberá ser inferior al tamaño de los números de la placa del vehículo."

En la Tabla 2, se muestra las unidades, límites mínimos, máximos y el método del ensayo a aplicarse según la norma **NTE INEN 2070:2006**.

Para tener una idea más clara acerca del cumplimiento de los requisitos fisicoquímicos del combustible Jet A-1, se presenta un Informe de Resultados (Anexo "B") del análisis realizado en el laboratorio de ensayos de la Refinería La Libertad, a un producto importado con su respectivo certificado de calidad.

En esos documentos, se presenta toda la información necesaria para verificar que los parámetros del combustible cumplen con las normas NTE INEN, previa la entrega del Jet A-1 a los usuarios.

Tabla 2. Requisitos fisicoquímicos Jet A-1

REQUISITOS	UNIDAD	MÍNIMO	MÁXIMO	MÉTODO DE ENSAYO
Color Saybolt		+21	-	NTE INEN 1048
Densidad relativa a 15,6ºC/15,6ºC	g/cm^3	0,775	0,840	ASTM D-1298
Densidad API	API	37	51	ASTMD-1298
Acidez total	MgKOH/g	-	0,1	ASTMD-3242
Aromáticos	%V*	-	22	ASTMD-1319
Olefinas	%V	-	5	ASTMD-1319
Azufre mercaptano	%P	-	0,003	ASTMD-3227
Azufre total	%P	-	0,3	NTE INEN 929
Corrosión a la lámina de cobre 2h a 100ºC		-	1	NTE INEN 927
Destilación 10% 20% 50% 90% Punto final de ebullición	 ºC ºC ºC ºC ºC	 - Reporte Reporte Reporte -	 205 - - - 300	 NTE INEN 926 NTE INEN 926 NTE INEN 926 NTE INEN 926 NTE INEN 926
Residuo	%V	-	1,5	NTE INEN 926
Pérdidas	%V	-	1,5	NTE INEN 926
Punto de inflamación	ºC	38	-	NTE INEN 1047
Punto de congelamiento	ºC	-	-47	ASTMD 2386
Punto de humo	Mm	20	-	ASTMD 1322
Contenido de naftaleno	%V	-	3	ASTMD 1840
Viscosidad a -20ºC	cSt	-	8	NTE INEN 810
Índice de separación de agua modificada (WSIM)		85	-	ASTMD 3948
Goma existente	$mg/100\ cm^3$	-	7	ASTMD 381
Estabilidad térmica Caída de presión en 5h Depósito en el tubo de precalentamiento	 KPa**	 - -	 3,33 <3	 ASTMD 3241 ASTMD 3241
Reacción al agua Clasificación de interface Clasificación de separación		- -	 15 2	 ASTMD 1094 ASTMD 1094
Agua en emulsión	Ppm	-	30	ASTMD 3240
Conductividad eléctrica	pS/m***	50	450	ASTMD 2624
Calor de combustión neta	MJ/Kg****	42,8	-	ASTMD 3338 o D4809
Contenido de partículas	mg/l	-	1	ASTM D 2276
Tiempo de filtración	Min	-	15	ASTM D 2276

*Combustibles con un contenido de aromáticos superiores al 20%V, pero menores al 25%V, están permitidos
** 1mm Hg = 133 Pa
*** Para combustible activado 1 pS/m= $1 \times 10^{12} \times \Omega^{-1} \times m$
**** Método dirimente
NOTA: Mientras no existan Normas INEN, se utilizará las normas ASTM correspondientes.

Fuente: Norma Técnica Ecuatoriana INEN 2070:2006
Elaborado por: Instituto Ecuatoriano de Normalización (INEN)

2.5. Tanques de almacenamiento

La norma **NTE INEN 2341:2013** muestra las definiciones para almacenamiento y tanques de almacenamiento.

> **"3.1.6.2 Almacenamiento: actividad destinada a recolectar petróleo y derivados en tanques específicamente diseñados y construidos para este fin."**

> **"3.1.6.3. Tanque de almacenamiento: sistema o recipiente construido expresamente para contener petróleo crudo y sus derivados en los lugares de producción, centros de distribución, terminales de almacenamiento y autotanques."**

Los tanques de almacenamiento, para nuestro caso, se usan como depósitos para contener una cantidad suficiente de combustible de aviación Jet A-1 para su uso posterior, uso en las aeronaves militares que tienen motores tipo turbina.

2.5.1. Tipos de tanques de almacenamiento

El tipo de almacenamiento al que está sometido el combustible de aviación Jet A-1 es de suma importancia porque garantiza que no estará en contacto con otros productos que puedan contaminarlo. Además, permite controlar las recepciones, despachos y el abastecimiento de los volúmenes requeridos por las aeronaves que operan en esta unidad.

Actualmente, existen instituciones que emiten normas internacionales para el diseño, construcción, montaje de instalaciones y tanques de almacenamiento de combustible de aviación Jet A-1, las mismas que se da a conocer a continuación:

- American Society for Testing and Materials (ASTM)
- American Petroleum Institute (API)
- National Fire Protection Association (NFPA)
- Steel Tank Institute (STI)
- Underwrites Laboratories Inc. E.U.A (UL)
- Underwriters Laboratories of Canada (ULC)

En el Ecuador, el diseño de tanques de almacenamiento se lo efectúa a través de normas API, que hacen referencia a las del ASTM, y con base en las normas de seguridad emitidas por la NFPA.

Para determinar los diferentes tipos de tanques de almacenamiento, se establece cuatro parámetros básicos que permiten mostrar una clasificación general de acuerdo a lo especificado en la Figura 3.

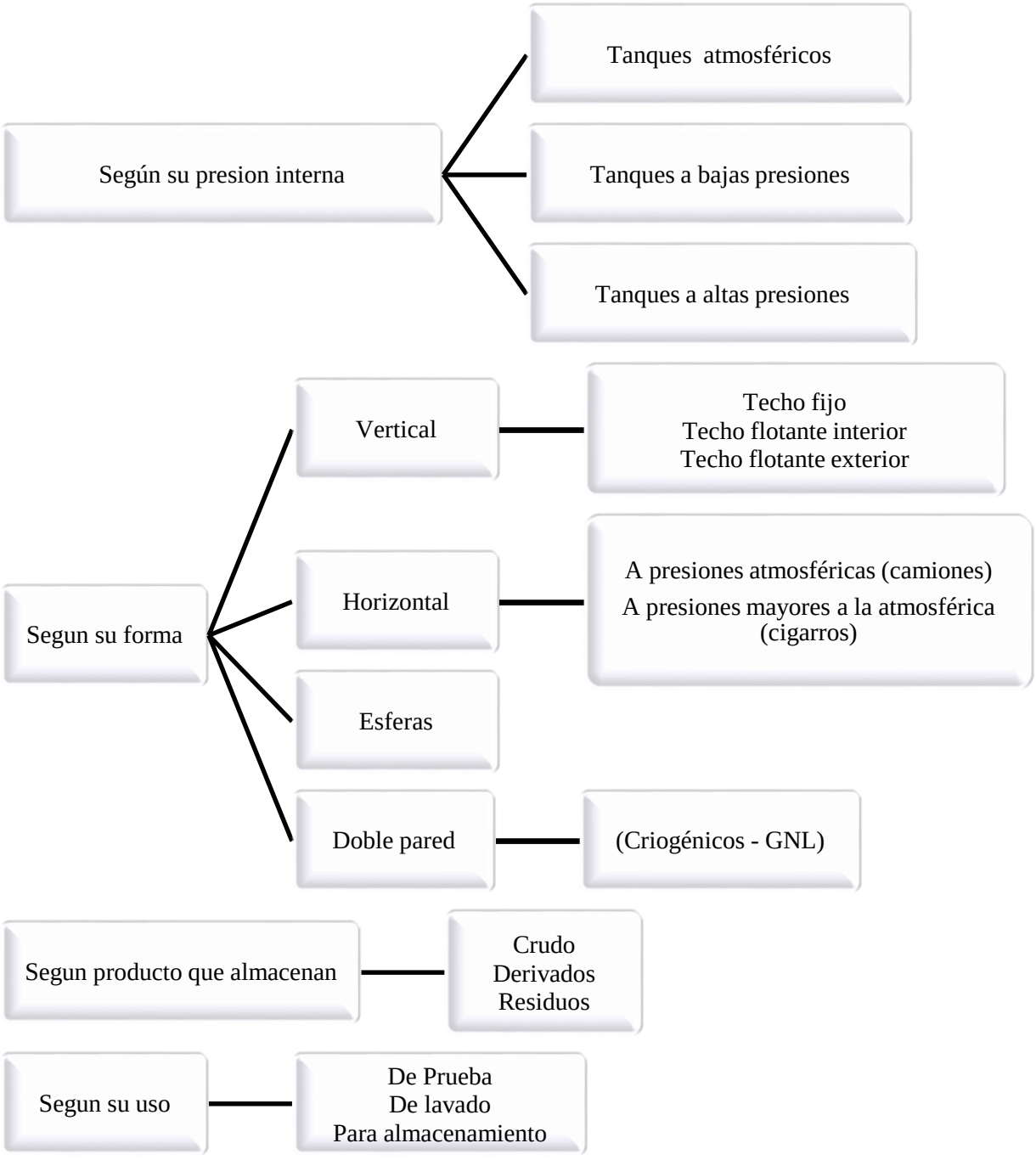

Figura 3. Clasificación de los tanques de almacenamiento en general

Fuente: Técnicas energéticas, Facultad de Ciencias UBA
Elaborado por: El autor

2.5.2. Partes de un tanque de almacenamiento

Las partes principales de las que está constituido un tanque de almacenamiento se lo observa en la figura 4 y son:

- Cuerpo
- Techo
- Fondo

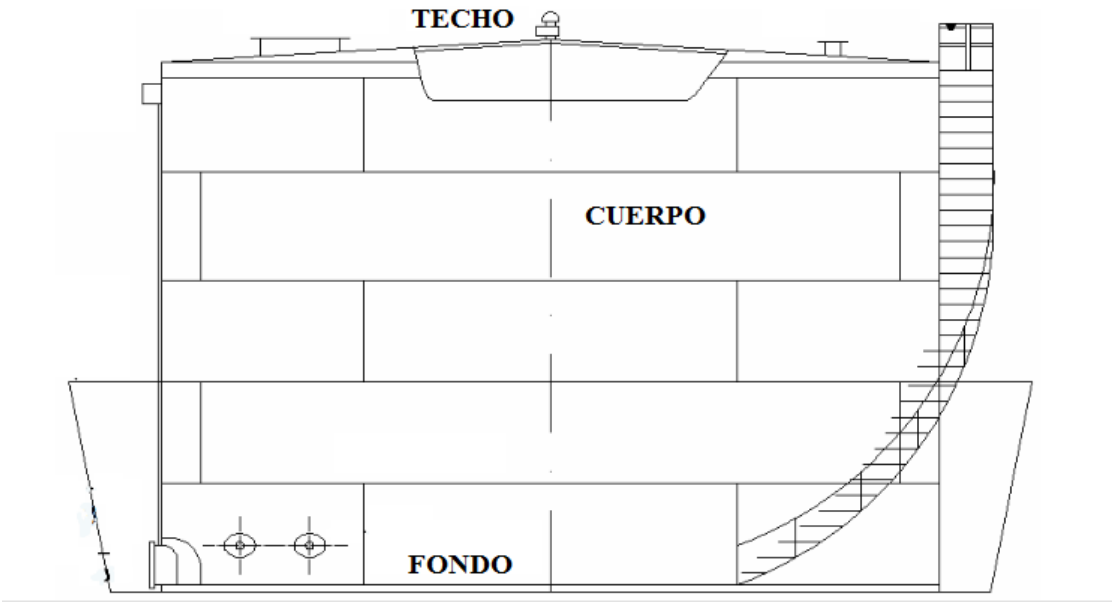

Figura 4. Partes principales de un tanque de almacenamiento
Fuente: Control de etapas Terminal Beaterio de Petrocomercial

Cada una de estas partes está compuesta por elementos adicionales, que van de acuerdo a su función, diseño, suministros requeridos o recomendados y de uso especial.

2.6. Códigos aplicables al diseño y cálculo de tanques de almacenamiento de Jet A-1

El diseño y los cálculos se basan en la publicación que realiza el Instituto Americano del Petróleo (API). Para este caso, el "ESTÁNDAR API 650" para tanques de almacenamiento a presión atmosférica y el "API 620" para tanques de almacenamiento sometidos a presiones internas cercanas a 1 kg/cm^2 (14 lb/plg^2).

La Norma API 650 cubre la fabricación de tanques para almacenamiento de fluidos líquidos y están construidos de acero, con el fondo uniformemente soportado por una cama de arena, grava, concreto, asfalto, etc.

Están diseñados para soportar una presión de operación atmosférica o presiones internas que no excedan el peso del techo por unidad de área y una temperatura de operación no mayor de 93°C (200°F). Esta Norma abarca el diseño y cálculo de elementos constitutivos del tanque. Las listas de los materiales de fabricación sugieren secuencias en la verticalidad del tanque, recomendaciones de procedimientos de soldaduras, pruebas e inspecciones, así como lineamientos para su operación.

2.6.1. Código API 650

Este código está basado en la acumulación del conocimiento y las experiencias de los usuarios y fabricantes de tanques de acero para el almacenamiento de productos derivados del petróleo, con varios tamaños, capacidades y presiones internas que no excedan de 17.2 KPa (2.5 lb/plg^2).

La tabla 3 muestra los requerimientos que especifican la Norma API 650, para la fabricación de tanques de fondo plano.

Tabla 3. Requerimientos API 650 para tanques de fondo plano

REQUERIMIENTO	API 650		
	BÁSICO	**APÉNDICE A**	**APÉNDICE F**
Presión interna máxima	**Atm.**	**Atm.**	**0.17 kg/ cm^2**
Temperatura mínima	**NS**	**(-) 28.8 °C**	**NS**
Temperatura máxima	**93.3°C**	**93.3°C**	**93.3°C**
Espesor máximo del cuerpo	**44.4 cm**	**12.7 cm**	**44.4 cm**
Espesor mínimo del cuerpo			
D < 15.2 m	**4.76 mm**		
15.2 m < D > 36.5 m	**6.35 mm**		
36.5 m < D > 60.9 m	**7.93 mm**		
D > 60.9 m	**9.52 mm**		
Espesor mínimo del techo	**4.76 mm**		
Espesor máximo del techo	**6.35 mm + CA**		
Angulo mínimo de coronamiento			
D < 10.6 m.	**50.8 mm x 50.8 mm x 4.76 mm**		
10.6 m. < D > 18.2 m	**50.8 mm x 50.8 mm x 6.35 mm**		
D > 18.2 m	**76.2 mm x 76.2 mm x 9.52 mm**		
NS: Sin especificación **CA:** Corrosión Permisible **RT:** Temperatura Ambiente			

Fuente: Diseño y cálculo de tanques de almacenamiento, API 650

A continuación, se describe las partes más importantes para la aplicación del código API 650, haciendo énfasis en temas relacionados directamente con este tema de investigación. Estos son:

- Alcance (1)
- Materiales (4)
- Diseño (5)
- Fabricación (6)
- Montaje y ensamblaje (7)
- Métodos de inspección de juntas (8)

- Procedimientos de calificación de soldaduras y soldadores (9)
- Marcado final (10)
- Apéndices

1. Alcance

Este estándar cubre requerimientos para materiales, diseño, fabricación, montaje y pruebas de tanques soldados verticales cilíndricos, no enterrados con el extremo superior abierto o cerrado en varios tamaños y capacidades diferentes para presiones internas cercanas a la atmosférica (no deben exceder al peso de las láminas del techo), pero se permite presiones internas más altas cuando se cumple requerimientos adicionales. Se aplica para tanques en los cuales la totalidad del fondo está soportado uniformemente y para tanques en servicio no refrigerado que tienen una temperatura máxima de diseño de 90°C (200°F) o menos.

La Norma sirve para construir tanques con seguridad adecuada y costos razonables para el almacenamiento de petróleo y sus derivados y otros productos líquidos comúnmente usados por la industria petrolera. El código no establece tamaños específicos de tanques y, por el contrario, se puede escoger cualquier tamaño que sea necesario. Su intención es ayudar a los clientes y fabricantes a comprar y montar tanques y no pretende prohibir la compra o fabricación que cumplan con otras especificaciones.

En la tabla 4, se describe la posición de cada anexo con respecto al Código API 650.

Tabla 4. Anexos para el estándar API 650

Anexos	Descripción	Estado
A	Bases de diseño opcional para tanques pequeños	Opción del comprador
AL	Tanques de almacenamiento de aluminio	Requerimientos
B	Recomendaciones para el diseño y construcción de la fundición civil para tanques de almacenamiento sobre la superficie	Recomendaciones
C	Techos flotantes externos	Requerimientos
D	Consultas técnicas	Procedimientos requeridos
E	Diseño sísmico de tanques de almacenamiento	Opción del comprador
EC	Comentario sobre anexo E	Información
F	Diseño de tanques para presiones internas pequeñas	Requerimientos
G	Techos de tipo domo de aluminio estructuralmente soportados	Requerimientos
H	Techos flotantes internos	Requerimientos
I	Detección de fugas por debajo del tanque y protección del suelo.	Opción del comprador
J	Tanques de almacenamiento ensamblados en planta	Requerimientos
K	Ejemplos de aplicación del método de diseño de punto variable para determinar el espesor de las láminas del cuerpo	Información
L	Hoja de datos para tanques código API 650	Información requerida
M	Requerimientos de tanques que operan a temperaturas elevadas	Requerimientos
N	Uso de nuevos materiales que no están identificados	Requerimientos
O	Recomendaciones para conexiones por debajo del fondo	Opción del comprador
P	Cargas externas permisibles en conexiones del cuerpo del tanque	Opción del comprador
S	Tanques de almacenamiento en acero inoxidable austenítico	Requerimientos
SC	Tanques de almacenamiento de acero inoxidable y mezcla de aceros al carbono.	Requerimientos
T	Resumen de los requerimientos de ensayos no destructivos	Requerimientos
U	Inspección ultrasónica en lugar de radiográfica	Opción del comprador
V	Diseño de tanques de almacenamiento para presiones externas	Opción del comprador
W	Recomendaciones comerciales y documentación	Recomendaciones
X	Tanques de acero inoxidable Duplex	Requerimientos
Y	Monograma API	Requerimientos

Fuente: Norma API Estándar 650, Edición 2013

Actualmente, existe el Código API 650 correspondiente al año 2013. Tiene 26 anexos que cubren diferentes aspectos del diseño y construcción de los tanques, los cuales están sujetos a decisiones del comprador, requerimientos estándar e información que complementan la norma básica. Los anexos se vuelven

requerimientos obligatorios solamente cuando el cliente o comprador especifican una determinada opción.

1.2. Limitaciones

Las reglas del código no son aplicables más allá de los siguientes límites en aquellas tuberías que están conectadas interna o externamente al techo, cuerpo o fondo del tanque:

a) La cara de la primera brida, excepto cuando se suministre tapas o bridas ciegas.

b) La primera superficie de sello en accesorios o instrumentos.

c) La primera junta en conexiones roscadas.

d) La primera junta circunferencial, si no están soldadas a una brida.

1.3. Cumplimiento

El fabricante es el responsable del acatamiento de los requerimientos del código. La inspección por parte del comprador no exime al fabricante la obligación de suministrar el control de calidad y las inspecciones necesarias para garantizar tal cumplimiento.

3. Materiales

3.1. Generalidades

3.1.1 Se debe utilizar los materiales enlistados en esta sección, sujetos a las modificaciones y limitaciones indicadas en el código API 650. Pueden utilizar

materiales producidos de acuerdo con especificaciones no listadas. Si certifican que el material cumple con todos los requisitos, el uso sería aprobado por el comprador.

3.1.2. Se puede utilizar materiales que no estén listados o identificados, siempre y cuando los materiales pasen todas las pruebas establecidas en el anexo N de la Norma API 650.

4.2. Láminas

4.2.1. Generalidades

4.2.1.1. Excepto, como permite el punto 3.1, las láminas deberán estar conforme con una de las especificaciones listadas en 4.2.2 hasta 4.2.6., sujetas a las modificaciones y limitaciones de este estándar.

4.2.1.2. Se pueden pedir las láminas para cuerpo, techo y fondo sobre la base de espesores en el borde o sobre la base de peso por unidad de área en kg/m^2 o lb/ft^2, como se especifica en 4.2.1.2.1, 4.2.1.2.2 y 4.2.1.2.3.

4.2.1.2.1. El espesor ordenado no debe ser menor que el espesor calculado o el espesor mínimo permitido.

4.2.1.2.2. El peso ordenado debe ser lo suficientemente grande para dar un espesor que no debe ser menor que el calculado o el mínimo permitido.

4.2.1.2.3. En cualquiera de los dos casos, el espesor real medido no puede estar más de 0.3 mm (0.01 plg) por debajo del calculado o del mínimo permitido.

4.2.1.3. Todas las láminas deberán ser fabricadas mediante procesos horno eléctrico u oxígeno básico. Los aceros producidos por el proceso de control termo-mecánico (TMCP) pueden ser usados si cumplen con los requerimientos establecidos en este párrafo.

4.2.1.4. El espesor máximo de la lámina es de 45 mm (1.75 plg) a menos que un espesor menor sea establecido en este estándar o en la especificación de la lámina. Estas planchas serían usadas como insertos o bridas y pueden ser más gruesas que 45 mm (1.75 plg), las cuales están descritas en 4.2.10.1.

Con espesores mayores a 40 mm (1.5 plg), deberán ser normalizadas o templadas y revenidas, calmadas, fabricadas con práctica de grano fino y con pruebas de impacto.

4.2.2. Especificaciones ASTM

Aquellas láminas que están conformes con las especificaciones ASTM son aceptables siempre y cuando estén dentro de las limitaciones allí establecidas.

4.2.3. Especificaciones CSA

Láminas de especificaciones CSA G40.21 en Grados 260W/(38W), 300W (44W) y 350W/(50W) son aceptables dentro de las limitaciones establecidas a continuación:

a) Para grados de 260W/(38W) y 300W(44W) se aceptan láminas de un espesor máximo de 25 mm si es acero semimuerto y un espesor de 40 mm si es de acero muerto o elaborados para prácticas de grano fino.

b) Para grados de 350W (50W) se aceptan láminas de espesor de 45 si son aceros muertos y o elaborados para prácticas de grano fino.

4.2.4. Especificaciones ISO

Láminas de especificaciones ISO 630 en Grados E275 y E355 son aceptables dentro de las limitaciones siguientes:

a) Para grados de E275 en calidades C y D, se aceptan láminas con un espesor máximo de 40 mm.

b) Para grados de E355 en calidades C y D para láminas de espesor máximo de 45 mm.

4.2.5. Especificaciones EN

Láminas de especificaciones EN 10025 en Grados S275 and S355 son aceptables dentro de las limitaciones establecidas en este párrafo.

a) Para grados S275 de calidad J0 y J2 para platinas con un espesor máximo de 40 mm.

b) Para grados S355 en calidad J0, J2 y K2 para laminas con un espesor máximo de 45 mm.

4.2.6. Estándares nacionales

Láminas producidas y probadas de acuerdo con los requerimientos de un estándar nacional reconocido y dentro de las limitaciones mecánicas y químicas de uno de los grados listados en la Tabla 4.2 de la Norma (Anexo “F”), son aceptables

cuando es aprobado por el comprador. Los requerimientos de este grupo no son aplicables a las especificaciones ASTM, CSA e ISO listadas en 4.2.2, 4.2.3, 4.2.4 y 4.2.5 para los propósitos de este ítem. Un estándar nacional es aquel que ha sido aprobado por el gobierno de un país.

4.2.7. Requerimientos generales para el despacho

4.2.7.1. El material deberá ser suministrado conforme a los requerimientos aplicables de la especificación listada, pero no está restringido con respecto a la localización del lugar de fabricación.

4.2.8. Tratamiento térmico de las láminas

4.2.8.1. Cuando sea especificado por el comprador de la lámina, totalmente muerta, será tratada para producir un refinamiento de grano normalizando o calentando uniformemente.

4.2.8.2. Cuando el comprador de la lámina decida efectuar el normalizado o formado por calentamiento, las láminas se aceptarán una vez que cumpla la prueba Mill de acuerdo a la orden generada por el comprador. El fabricante de la lámina informará al comprador si se realizó algún tratamiento térmico y sus especificaciones.

4.2.9. Pruebas de impacto de las láminas

4.2.9.1. Cuando es requerido por el comprador o por los requisitos 4.2.10 de esta sección del código, se debe sacar un juego de muestras de impacto de las láminas

después del tratamiento térmico (si ha sido tratada) y éstas deben cumplir con los valores especificados de energía absorbida.

4.2.9.2. Para preparar muestras de prueba o cuando las láminas son suministradas por el fabricante, en una condición de laminado en caliente con un tratamiento térmico, el procedimiento deberá estar conforme con ASTM A 20.

4.2.9.3. La prueba consiste en tomar tres muestras del material a ser ensayado. El valor promedio de la energía absorbida de las tres muestras (no más de uno por debajo de este valor) deberá cumplir con el valor mínimo especificado. Si más de uno de los valores está por debajo del mínimo especificado, o si uno de ellos es menor de 2/3 de ese valor, se deberá probar tres muestras adicionales y cada una de ellas deberá dar un valor mayor o igual al mínimo especificado.

4.2.9.4. El método a utilizar es el ensayo Charpy con entenalla en V Tipo A (ASTM A370), con la entenalla o ranura perpendicular a la superficie de la lámina a ser ensayada. La probeta a ensayar se lleva a la temperatura de prueba, se pone en la máquina sobre soportes y es golpeada con el péndulo en el lado opuesto de la ranura.

4.2.9.5. Para una lámina cuyo espesor es insuficiente para permitir la preparación de una muestra estándar de tamaño completo (10 mm x 10 mm), se deberá hacer pruebas en la muestra sub-estándar más grande que se pueda preparar de la lámina. Las muestras sub-estándar deberán tener un ancho a lo largo de la entenalla de, al menos, el 80% del espesor del material.

4.2.9.6. Los valores de energía de impacto obtenidos de las muestras sub-estándar no deberán ser menores a los que son proporcionados a los valores de energía requerida para una estándar de tamaño completo del mismo material.

4.2.9.7. Los aparatos de prueba, incluyendo la calibración de las máquinas de impacto, y las variaciones permisibles de la temperatura de las muestras deberán estar de acuerdo con ASTM 370 o un aparato de prueba equivalente de acuerdo con estándares nacionales o estándares ISO.

4.2.10. Requerimientos de tenacidad.

4.2.10.1. Los espesores y temperaturas mínimas de diseño de todas las láminas del cuerpo, refuerzo del cuerpo, insertadas, del fondo, soldadas o láminas usadas para pasos de hombre y para cuello de conexiones, láminas usadas en bridas de conexiones, bridas ciegas y tapas de los pasos de hombre deben estar de acuerdo con la figura 4.1a y 4.1b (Anexo F). La evaluación para impacto de bridas a partir de la lámina, bridas ciegas y tapas de los pasos de hombre se hace con base en el "espesor que gobierna", como está definido en el párrafo 4.5.4.3 de la Norma API 650.

Adicionalmente, las láminas con espesores mayores de 40 mm (1.5 plg.) deberán ser de acero calmado fabricadas con práctica de grano fino, tratadas térmicamente por normalización, temple y revenido. Cada lámina en condición tratada térmicamente deberá tener las pruebas de impacto de acuerdo con el punto 4.2.11.2 de la Norma API 650.

4.2.10.2. El proceso de control termo-mecánico (TMCP) puede ser usado alternativamente en láminas que requieren un tratamiento con calor según el punto 4.2.10.1 en espesores sobre los 40 mm (1.5 plg.). Para este caso, también, se realizará la prueba de impacto Charpy de entenalla tipo V de acuerdo al punto 4.2.9, 4.2.10 y 4.2.11 de la Norma API 650.

4.2.10.3. Láminas con espesores menores o iguales a 40 mm (1.5 plg.) pueden ser utilizadas a temperaturas iguales o por encima de la indicada en la figura 4.1a y figura 4.1b (anexo F), sin requerir la prueba de impacto.

4.2.10.4. Láminas usadas para reforzar las aberturas y láminas insertadas deben ser del mismo material que el cuerpo de acuerdo al material listado en las tablas 4.4a y 4.4b, figuras 4.1a y 4.1b (anexo F). Excepto para la boquilla, el material será de acuerdo a los puntos 4.2.10.1 y 5.7.2.3 de la Norma.

4.2.10.5. No se requiere materiales con tenacidad especial, de acuerdo a 4.2.10.4, para boquillas del cuerpo y pasos de hombre.

4.2.11. Procedimiento de dureza

4.2.11.1 Cuando se requiera determinar la dureza de un material, se realizará uno de los procedimientos descritos en los puntos 4.2.11.2 y 4.2.11.3, como lo especifica el punto 4.2.10.

4.2.11.2 Cada lámina si es rolada o tratada térmicamente se le realizará la prueba de impacto de acuerdo con lo descrito en el punto 4.2.9 de la Norma API 650.

4.2.11.3. Para láminas semiroladas, cuando se realice el tratamiento térmico estas se someterán a la prueba de impacto para materiales TMCP de acuerdo al punto 4.2.9 de la norma API 650.

4.3. Platinas

Platinas para techos fijos se aplicará según la ASTM A1011M grado 33. Deberán ser fabricadas por los procesos de núcleo abierto u oxígeno básico. Si se requiere el uso de acero con contenido de cobre, se debe especificar en la orden de compra. Estas podrán ser ordenadas con base en opción del fabricante.

4.4. Perfiles estructurales

4.4.1. Estos estarán acorde a:

- ASTM A36M/A36.
- ASTM A131M/A131.
- ASTM A992M/A992.
- Aceros estructurales listados en la AISC, Manual de Aceros de Construcción.
- CSA G40.21 en grados 260W (38W), 300W (44W), 350W (50W), 260WT (38WT), 300WT (44WT) y 350WT (50WT).
- ISO 630, Grado E275, calidades B, C y D.
- EN 10025, Grade S275, Qualities JR, J0, and J2.

4.4.2. Todos los perfiles estructurales de acero serán elaboradas por los procesos de pen-heart, horno eléctrico y el básico de oxígeno.

4.4.3. No todos los perfiles estructurales de acero que figuran en las tablas 4.4.a, 4.4.b, 4.5.a y 4.5.b (anexo F), son los más adecuados para realizar operaciones con soldadura. La selección del material para las formas estructurales que requieren conexiones soldadas incluirá la confirmación de soldabilidad del fabricante, otras fuentes reconocidas, o por la prueba de soldadura. En el caso del uso de perfiles de acero estructural que tiene baja condición soldabilidad, estos serán diseñados para una conexión atornillada.

4.5. Tuberías y forjas

A menos que sea especificado de otra manera en la Norma API 650, las tuberías y los accesorios de la tubería y forja deben estar de acuerdo con las especificaciones listadas en 4.5.1.1. y 4.5.1.2, o un estándar nacional equivalente a las especificaciones listadas.

4.5.1.1. Las siguientes especificaciones son aceptadas para tuberías y sus accesorios:

- API Spec 5L, Grados A, B y X42;
- ASTM A53M/A53, Grados A and B;
- ASTM A106 M/A106, Grados A and B;
- ASTM A234M/A234, Grado WPB;
- ASTM A333M/A333, Grados 1 and 6;

- ASTM A334M/A334, Grados 1 and 6;
- ASTM A420M/A420, Grado WPL6;
- ASTM A524, Grados I y II;
- ASTM A671 (ver 4.5.3)

4.5.1.2. Las siguientes especificaciones son aceptables para forjas:

- ASTM A105M/A105;
- ASTM A181M/A181;
- ASTM A350M/A350, Grados LF1 y LF2.

4.5.3. Cuando se utiliza tubería ASTM A671 para las boquillas y cuellos de pasos de hombre, deberá cumplir lo siguiente:

a) La selección del material se limitará a los grados 55 CA, CC 60, CC 65, CC 70, CD 70, CD 80, CE 55 y CE 60.

b) La tubería será sometida a una prueba de presión de acuerdo a la norma ASTM A671.

c) La especificación de la placa de la tubería deberá satisfacer los requisitos de 4.2.7, 4.2.8 y 4.2.9 de la Norma API 650.

4.5.4.2. Otros materiales de tuberías y forjas se clasificarán bajo los grupos de materiales mostrados en la figura 4.1a y 4.1b (Anexo F), de acuerdo a lo siguiente:

a) Grupo IIA—API Spec 5L, Grados A, B, y X42; ASTM A106M/A106, Grados A and B; ASTM A53M/A53, Grados A y B; ASTM A181M/A181; ASTM A105M/A105; y A234M/A234, Grado WPB;

b) Grupo VIA—ASTM A524, Grados I y II.

4.5.4.3. Los materiales en los grupos del listado en el punto 4.5.4.2 pueden ser usados en espesores nominales, incluyendo el espesor por corrosión, en una temperatura de diseño de metal no menor a las mostradas en las figuras 4.1a y 4.1b (anexo F) sin la prueba de impacto.

4.6. Bridas

Pueden ser de tipo anillo Slip-on y con cuello para soldar. Deberán estar de acuerdo con los requerimientos de materiales de la ASME B16.5 para bridas forjadas de acero al carbono. El material de lámina usado para hacer bridas de boquillas deberá tener propiedades físicas iguales o mejores que las ASME B16.5, conforme a 4.2.10.1 y 4.2.10.2 de la Norma API 650.

4.6.2. Para los tamaños nominales de tubería mayor que NPS 24 se puede usar bridas que cumplen con las especificaciones ASME B16.47 serie B.

4.7. Tornillos

a) Estarán conforme a la ASTM A193 B7 con las dimensiones especificadas en ASME B18.2.1. Tuercas conforme a ASTM A194 Grado 2H y las dimensiones a ASME B18.2.2. Serán de patrón hexagonal, con el roscado según ASME B1.13M (SI) o con ASME B1., de acuerdo a lo siguiente:

1) Pernos con un diámetro igual o mayor que 1 pulgada de diámetro: UNC Clase 2A.

2) Tuercas de los pernos con un diámetro igual o mayor que 1 pulgada: UNC Clase 2B.

3) Pernos de diámetro 1,125 pulgada y mayores: 8N Clase 2A

4) Tuercas de los pernos de diámetro 1,125 pulgada y mayores: 8N Clase 2B

b) A menos que el comprador especifique lo contrario, el tipo de anclaje a usarse deberá ser uno de los siguientes:

1) Una barra redonda A36 ASTM, roscada y galvanizada;

2) Pernos ASTM F1554, Grado 36, galvanizados.

3) Las Tuercas hexagonales para anclajes deben ser galvanizados reforzado. En el caso de soldadura no se permite anclajes galvanizados.

c) El resto de los pernos que cumplan con la norma ASTM A307 o A193M/A193. A325M/A325 se puede utilizar solo para fines estructurales.

4.8. Electrodos de soldadura

Para soldadura de materiales con una resistencia mínima de tensión menor de 550MPa soldados con proceso de electrodo revestido (SMAW), se debe utilizar electrodos de acuerdo con las series de clasificación E-60 o E-70 (apropiados para

las características de corriente eléctrica), la posición de la soldadura y otras condiciones del uso según AWS A5.1 y deberá estar de acuerdo a 7.2.1.10 de la Norma como sea aplicable.

4.8.1. Para la soldadura de materiales con una resistencia mínima a la tracción inferior a 550 MPa, se ajustarán a la serie E60 y E70 (adecuado para la corriente eléctrica, la posición de la soldadura, y otras condiciones de uso previsto) en la clasificación AWS A5.1.

4.8.2. Para la soldadura de materiales con una resistencia a la tracción mínima de 550 MPa a 585 MPa, los electrodos de soldadura por arco se ajustarán a la serie de clasificación E80XX-CX en AWS A5.5.

4.9. Empaques

4.9.1 General

4.9.1.1. El material de los empaques deberá estar especificado en la tabla 3 de la hoja de datos (Anexo G), y no serán fabricados de asbesto.

4.9.1.2. Las hojas de empaques serán continuas. Empaques metálicos son aceptables si la soldadura es al ras y que termine en la misma parte no soldada de la junta. Las juntas tendrán extremos solapados.

4.9.1.3. Cada empaque usará un dispositivo de posicionamiento.

.**Sección 5. Diseño**

5.1. Juntas

5.1.1. Definiciones

En este punto de la norma API 650 se puede encontrar las definiciones de Soldaduras a tope, Junta de soldadura a tope sencilla, Junta de soldadura de traslape doble, Soldadura de filete, Soldadura de filete completo, Junta de soldadura a tope doble, Junta de soldadura de traslape sencillo y punto de soldadura de armado, y que se pueden observar en las Figuras 5, 6 y 7 de este trabajo.

5.1.2 Tamaño de las soldaduras

5.1.2.1. El tamaño de una soldadura de ranura se basa en la penetración conjunta (es decir, la profundidad del biselado más el penetración de fondo cuando se especifique).

5.1.2.2. El tamaño de un cordón de soldadura se basará en la longitud del triángulo rectángulo más grande que puede ser inscrito dentro de la sección transversal de la soldadura de filete.

5.1.5. Juntas típicas

5.1.5.1. Las juntas típicas son: verticales del cuerpo, horizontales del cuerpo, traslapadas de fondo, a tope del fondo, del anillo de fondo, soldadura de filete de la junta cuerpo-fondo, de la viga contraviento, de techo y ángulo superior de

cuerpo. A continuación, en las Figuras 5, 6 y 7 se muestran las gráficas de estos tipos de juntas:

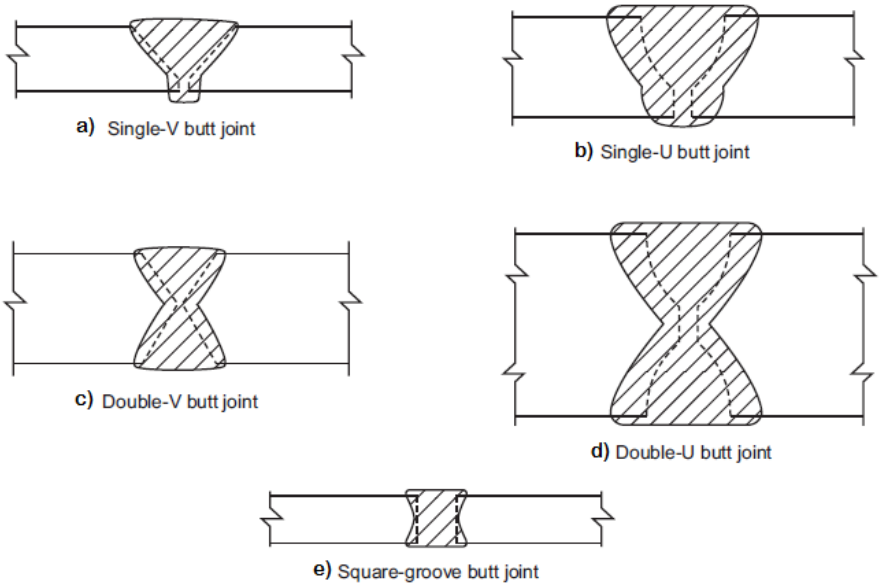

Figura 5. Juntas verticales del cuerpo
Fuente: API Estándar 650, Edición 2013

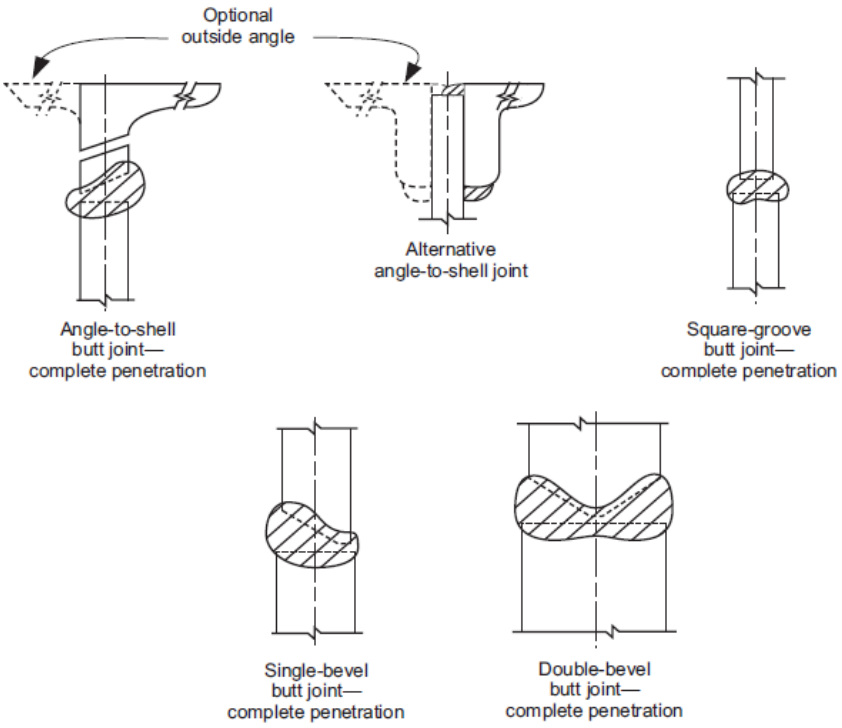

Figura 6. Juntas horizontales del cuerpo
Fuente: API Estándar 650, Edición 2013

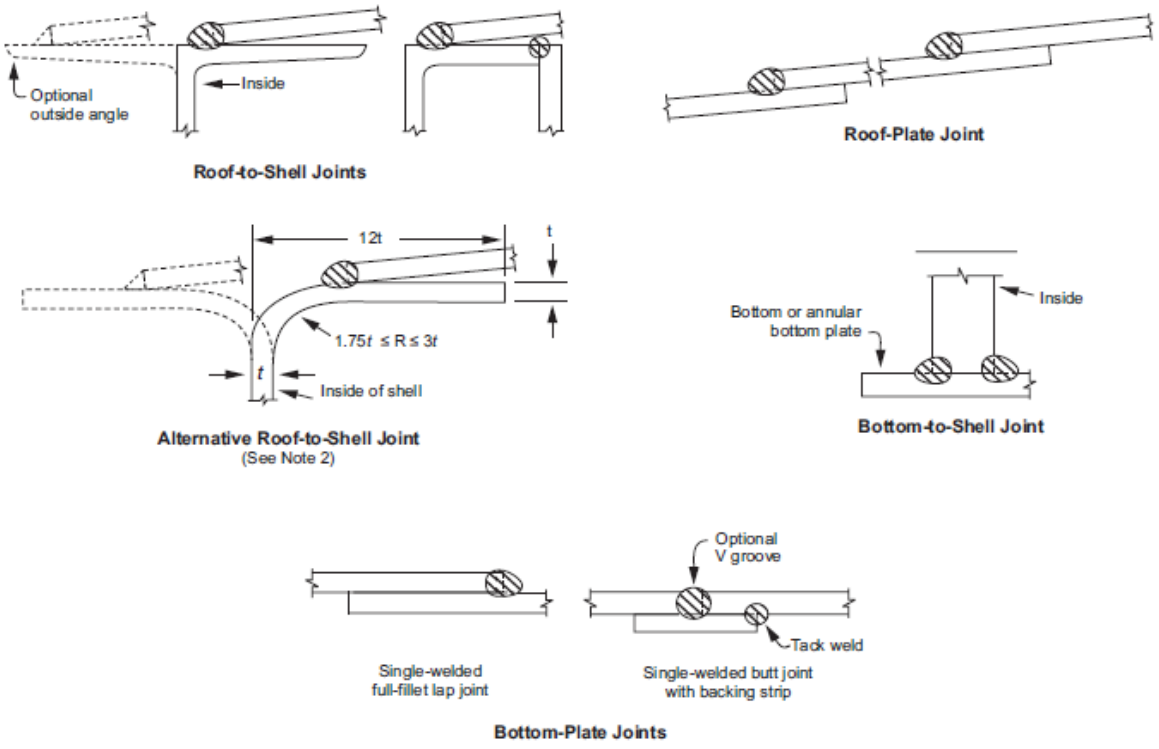

Figura 7. Juntas traslapadas y de tope al fondo
Fuente: API Estándar 650, Edición 2013

5.2. Consideraciones de diseño

5.2.1. Cargas

a) Carga muerta (D_L)

Es el peso del tanque o del componente del tanque, incluyendo cualquier tolerancia de corrosión, a menos que se considere otra cosa.

b) Presión externa de diseño (P_e)

La presión externa de diseño, es la ejercida por el viento y los sismos hacia el cuerpo del tanque causando un momento de giro sobre el cuerpo y el fondo del tanque, esto determina en la reacción de elevación del techo, afectando la

estabilidad. Esta presión de diseño no deberá ser menor que 0.25 kPa excepto para tanques con orificios de circulación de acuerdo al Anexo H de la Norma API 650. Si la presión es mayor que 0.25 kPa, usar el anexo V de la Norma. Los tanques construidos pueden ser sometidos a un vacío parcial de 0.25 kPa, sin necesidad de cálculos adicionales.

c) Presión interna de diseño (P_i)

Es la presión ejercida sobre la pared del tanque, que es producto de la altura del líquido almacenado, el valor más alto de la presión se localiza en la parte inferior del tanque y va disminuyendo proporcionalmente a lo largo de su altura. Para el diseño de tanques, de acuerdo a la Norma API 650, no deberá exceder de 18 kPa (2.5 lb/plg^2).

d) Prueba hidrostática (H_t):

Esta prueba consiste en llenar con agua el tanque con el fin de determinar el correcto diseño de la cimentación y diseño del tanque. Sirve para detectar fallas y realizar las correcciones respectivas sobre la marcha, para obtener una prueba positiva. La carga debida al llenado del tanque con agua (gravedad específica: 1.0) hasta el nivel de diseño del líquido determina la presión hidrostática total para realizar esta prueba.

e) Carga viva mínima del techo (L_r)

La carga viva mínima que soporta el techo es el producto del área por la carga viva que la normativa exige (1,2 KPa), además se considera para esta carga, al personal y maquinaria que eventualmente podrían encontrase en el techo.

La Norma API 650 determina que la carga viva mínima para el techo deberá ser 1.0 kPa en el área horizontal proyectada del techo. Esta carga, alternativamente, será determinada con ASCE 7, pero no será menor que 0.72 kPa (15 lb/pie^2).

f) Carga del Líquido almacenado (F)

Es la carga debido al llenado del tanque hasta el nivel de diseño de líquido H, de acuerdo a la gravedad específica del producto a almacenar dada por el comprador.

g) Prueba de presión

Esta prueba se la realiza cuando el tanque está terminado, consiste en llenar de agua hasta el nivel del ángulo de tope o de diseño de líquido, para luego aplicar una presión interna durante 15 minutos, para posteriormente reducir esta presión a la mitad y detectar fugas en las uniones y puntos de soldadura mediante la aplicación de una capa fina jabonosa.

h) Viento (W)

La ráfaga de diseño del viento será de 3 segundos determinada por la ASCE 7-05 o ASCE 7-10 multiplicado por sus factores de riesgo especificado por el comprador. La presión de diseño del viento en el cuerpo (P_{ws}) deberá ser 0.86 kPa, en las áreas verticales de las superficies cilíndricas.

Mientras que la presión hacia arriba para el techo (P_{wR}) debe ser de 1.44 kPa en las áreas horizontales proyectadas de las superficies cónicas o de doble curvatura, donde V es la ráfaga de velocidad de viento de 3 segundos.

i) Cargas externas

Son todas las cargas a las que está expuesto el exterior del tanque. El comprador deberá establecer la magnitud y dirección de las cargas externas o restricciones que existan para el diseño del cuerpo y conexiones.

Para diseño sísmico, se ajustarán a lo descrito en el anexo E de esta Norma (API 650). Además las cargas localizadas resultantes de plataformas, escaleras, etc., deben ser consideradas.

5.2.3. Factores de diseño

El comprador establecerá la temperatura de diseño del metal (basado en la temperatura ambiente), la gravedad específica de diseño, la tolerancia de corrosión (si hay alguna) y la temperatura máxima de diseño.

5.2.4. Medidas de protección

El comprador debe tener especial cuidado y consideración con la fundación civil, las tolerancias de corrosión, las pruebas de dureza y cualquier otra medida de protección que sea necesaria.

5.2.5. Capacidad del tanque

La máxima capacidad es el volumen de producto en un tanque que está lleno hasta el nivel de diseño del líquido (H). El comprador debe especificar la máxima capacidad del tanque y el nivel de la protección para el sobre-llenado del mismo (o el volumen). Usar como guía la práctica estándar API 2350. La capacidad neta de trabajo es el volumen de producto disponible bajo las condiciones normales de operación.

Esta capacidad es igual a la máxima capacidad, menos el volumen mínimo de operación que permanece en el tanque, menos el nivel de la protección para el sobre-llenado del tanque (o el volumen), como se muestra en la Figura 8 que a continuación se detalla.

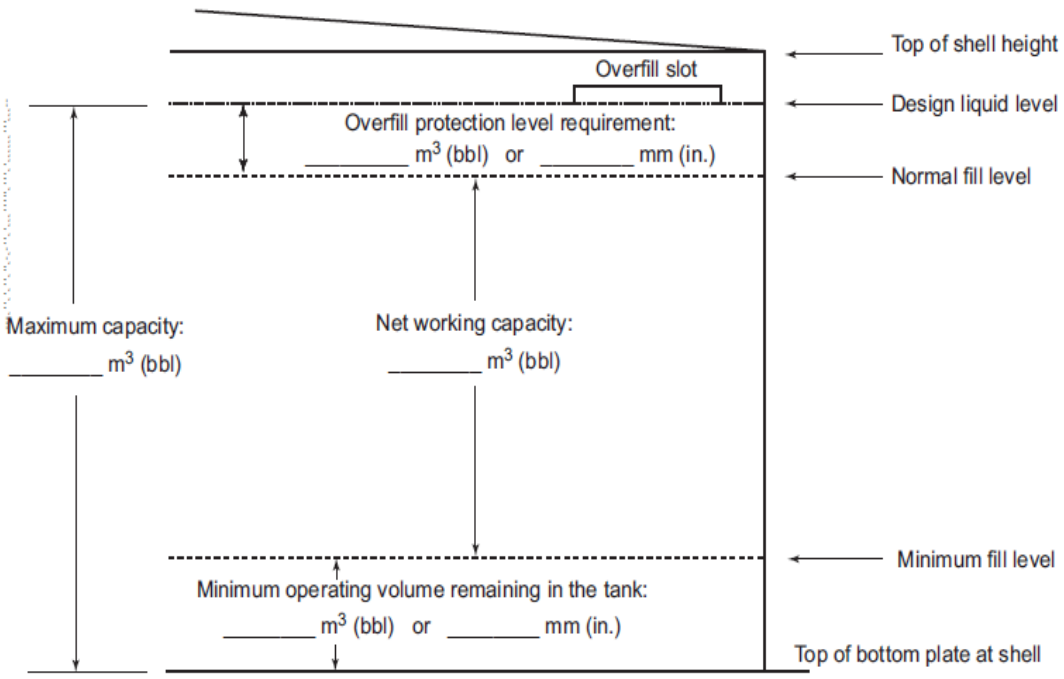

Figura 8. Nomenclatura de los niveles de líquido en los tanques.
Fuente: API Estándar 650, Edición 2013

5.3. Consideraciones especiales

5.3.1. Fundación civil.

Es el sitio con las condiciones de superficie y el tipo de suelo bajo esta, además de las condiciones climáticas que serán analizadas cuidadosamente antes de la instalación de tanques.

La selección de localización del tanque y el diseño y construcción de la fundación civil deben tener una consideración cuidadosa, como se sugiere en el anexo B de esta Norma (API 650), para garantizar un soporte adecuado para el tanque. La indicada fundación civil es responsabilidad del comprador.

5.3.2. Tolerancia de corrosión

Es el espesor adicional de las láminas, elementos y accesorios que conformaran el tanque. Este debe estar acorde a las condiciones ambientales y determinado a un valor adecuado a fin de evitar gastos innecesarios de material y costos.

5.3.2.1. El cliente, después de establecer el total efectivo del líquido a almacenar, el vapor sobre el líquido y el ambiente atmosférico, especificará, en la hoja de información, cualquier tolerancia de corrosión a proveer a cada uno de los componentes y accesorios del tanque.

5.3.2.2. Excluyendo los cuellos de las boquillas, la tolerancia por corrosión si se calcula, para boquillas, accesorios para limpiezas rápida, pasos de hombre y

techos autosoportados, se añadirá al espesor de diseño, o al espesor mínimo especificado.

5.3.2.3. Para cuellos de boquillas, la tolerancia por corrosión se especificará por acuerdo entre el Comprador y el fabricante, pueden agregar a el grosor del cuello nominal lo especificado en las tablas 5.6a y 5.6b o las tablas 5.7a y 5.7b (anexo F). En ningún caso el espesor de cuello será inferior al espesor nominal que se muestra en las tablas antes mencionadas.

5.3.2.4. La tolerancia por corrosión para pernos de anclaje, se añadirá al diámetro nominal.

5.3.2.5. La tolerancia por corrosión para los anclajes y soportes, se añadirá a los valores requeridos de espesor.

5.3.5. Espesor

Es el espesor de las láminas que conformarán el cuerpo, techo, fondo y los accesorios del tanque. Cuando se especifica un material con un espesor de 6 mm (1/4 plg), se usará un material con un espesor de 0,236 plg. Cuando se especifique un material de 5 mm (3/16 plg.), el espesor del material que se especifica será 4.8 mm. El cálculo del diseño se basará en el espesor usado.

5.4. Láminas del fondo

Son las láminas que conformaran el fondo del tanque. Todas las láminas del fondo deberán tener un espesor nominal mínimo de 6 mm (1/4 plg.) sin incluir ninguna

tolerancia de corrosión especificada. A menos que se acuerde otra cosa con el cliente, todas las láminas rectangulares y del borde del fondo deben tener un ancho mínimo de 1800 mm (72 plg. o 6ft.). Se debe ordenar láminas de fondo de tamaño suficiente para que, cuando sean refiladas, quede una proyección de, al menos, 50 mm (2plg) hacia afuera del borde exterior de la soldadura de unión del cuerpo al fondo

Los valores presentados en la tabla 9 muestran el tamaño del filete de cada suelda que corresponde a cada espesor nominal de las láminas del cuerpo.

Espesor nominal de lámina del cuerpo		Dimensión nominal del filete de soldadura	
(mm)	(in.)	(mm)	(in.)
5	0.1875	5	3/16
> 5 to 20	> 0.1875 to 0.75	6	1/4
> 20 to 32	> 0.75 to 1.25	8	5/16
> 32 to 45	> 1.25 to 1.75	10	3/8

Figura 9. Dimensiones de filete de soldadura para espesores nominales del cuerpo
Fuente: API Estándar 650, Edición 2013

5.5. Platina Anular del Fondo

Es una plancha ubicada en el fondo del tanque que tiene un ancho radial de por lo menos 600mm entre el interior del cuerpo y cualquier unión soldada en el resto del fondo, y 50 mm fuera del cuerpo.

Cuando el anillo inferior del cuerpo se haya diseñado usando los esfuerzos admisibles de los materiales en los grupos IV, IVA, V o VI, y el esfuerzo máximo para el primer cordón es de 160 MPa, o la tensión máxima de prueba hidrostática es menor o igual a 172 MPa, las planchas se soldaran a tope.

5.7. Aberturas del cuerpo

5.7.2.3. A excepción de las aberturas montadas en el cuerpo y sus conexiones, todos los refuerzos se harán con diámetro igual al del agujero de la lámina del cuerpo del tanque. El refuerzo puede ser diseñado de acuerdo a lo siguiente:

a) Según la brida de fijación del accesorio que va a ser insertado en el cuerpo.

b) Según la placa de refuerzo ya sean para pasos de hombre, boquillas y otros accesorios, deberán ser de la misma composición nominal (es decir, el mismo número ASME y el mismo número de grupo).

CAPÍTULO III

REDISEÑO DE LOS TANQUES DE ALMACENAMIENTO

3.1. Situación actual de las instalaciones de almacenamiento

En la actualidad, las instalaciones de almacenamiento del combustible JET-A1 con que cuenta la base aérea Salinas datan de varios años atrás, las mismas que presentan defectos, tanto en su estructura como en los elementos que lo componen.

En la figura 9 se muestra las imágenes de la infraestructura exterior actual en la que encuentran localizados los tanques de combustible de Jet A-1, que claramente se puede observar su deterioro y su señalización incorrecta.

Figura 10. Infraestructura actual de los tanques de almacenamiento del combustible JET A1.
Elaborado por: El autor

Al realizar una inspección técnica para determinar las condiciones en que se encontraban los tanques, se pudo constatar los defectos siguientes:

- Pérdida de espesor de las láminas del tanque (figura 11).

- Las bocas de llenado del tanque sin protección (figura 12).
- Mangueras de llenado y conexión a tierra deterioradas (figura 13).
- Indicadores de nivel defectuosos (figura 14).
- Sistema contraincendios inadecuado (figura 15).

Figura 11. Pérdida de espesor de las láminas del tanque
Elaborado por: El autor

Figura 12. Boca de llenado de los tanques de combustible
Elaborado por: El autor

Figura 13. Conexión a tierra y Manguera de llenado
Elaborado por: El Autor

Figura 14. Medidor de nivel inadecuado
Elaborado por: El Autor

Figura 15. Extintor inapropiado para casos de emergencia
Elaborado por: El autor

3.2. Diseño, dimensiones, características y accesorios del tanque

3.2.1. Determinación de la capacidad del tanque

La capacidad actual de los tanques de almacenamiento de combustibles Jet A-1 es de 39.900 galones. Para el nuevo diseño, se tendrá una capacidad operativa de 27.500 galones en cada unidad, es decir, se podría almacenar 55.000 galones en los dos tanques, que está acorde a los consumos mensuales reportados en el anexo "C".

La capacidad operativa de cada tanque es 27.500 galones, y, dado que, para el diseño, se requiere conocer la capacidad nominal, ésta será determinada

considerando un 10% adicional del valor de la capacidad operativa, lo que permitirá obtener diámetros, alturas y números de anillos correspondientes.

Capacidad operativa	27.500 galones (103,95 m^3)
Capacidad nominal	30.250 galones (114,35 m^3)

Tabla 5. Tamaños típicos y capacidades nominales (m^3) para tanques con anillos de 2400 mm (SI)

COLUMNA 1	COLUMNA 2	COLUMNA 3	COLUMNA 4	COLUMNA 5	COLUMNA 6	COLUMNA 7	COLUMNA 8	COLUMNA 9
DIÁMETRO DEL TANQUE m	**CAPACIDAD POR METRO DE ALTURA m^3**	**Altura del tanque (m)/Numero de anillos en el tanque completo**						
		4.8/2	**7.2/3**	**9.6/4**	**12/5**	**14.4/6**	**16.8/7**	**19.2/8**
3	7.07	34	51	68	-----	-----	-----	-----
4.5	15.9	76	**115**	153	191	----	----	-----
6	28.3	136	204	272	339	407	----	-----
7.5	44.2	212	318	424	530	636	742	848
9	63.6	305	458	610	763	916	1069	1221

Fuente: Norma API 650, Tabla A.3a, Edición 2013
Elaborado por: El Autor

En la tabla 5 que corresponde a la tabla A.3a de la Norma API 650, se identifica el valor nominal de las capacidades de los tanques. Se selecciona 115 m^3 que es el valor más cercano a la capacidad nominal requerida. Es decir, las características técnicas de los tanques serán:

Tabla 6. Características físicas de los tanques

Diámetro (m)	4,5
Altura (m)	7,2
Número de anillos	3
Capacidad nominal (m^3)	115
Capacidad operativa (m^3)	104.54
Capacidad de sobre llenado y remanente (m^3)	10.46
Volumen mínimo de operación remanente (m^3)	3.16
Volumen de protección de sobrellenado (m^3)	7,3
Nivel de protección de sobrellenado (mm)	458

Elaborado por: El autor

3.2.2. Diseño del cuerpo del tanque

3.2.2.1. Datos y condiciones generales del diseño

Para el diseño de los tanques de almacenamiento, se presenta la información y las condiciones a las que estarán sometidos, de acuerdo al detalle siguiente:

- Altura nominal del tanque (H_{nom}) : 7.2 m
- Diámetro interior del tanque (D) : 4.5 m
- Capacidad (C) : 115 m^3
- Cálculo de espesores por el método del Pie.
- Presión de diseño: presión atmosférica (14.7psia o 101.352 KPa o 1 atm.)
- Gravedad específica del líquido a almacenar G: 1.0 (Prueba hidrostática)
- Corrosión Admisible (CA): 3.175 mm para el cuerpo (dispuesta por el cliente).
- Espesor mínimo requerido: 6 mm.
- Temperatura máxima de operación: 93°C.
- Material para planchas del tanque: A-36

3.2.2.2. Determinación del espesor

El cuerpo del tanque, también llamado envolvente, se forma de la unión de anillos hasta alcanzar la altura requerida, los cuales se construyen soldando láminas

roladas, dando forma al perímetro del tanque. Debido a esto, se puede afirmar que el cuerpo es el componente más grande y crítico de los tanques, siendo el 70% de su construcción. Esto conlleva a realizar, de manera minuciosa, el cálculo de los espesores que permitan montar los tanques para que sean eficientes y de costos razonables.

Tabla 7. Espesor de la placa del cuerpo (mm) para tamaños típicos de tanques con anillos de 2400 mm (SI)

COLUMNA 1	COLUMNA 2	COLUMNA 3	COLUMNA 4	COLUMNA 5	COLUMNA 6	COLUMNA 7	COLUMNA 8	COLUMNA 9	COLUMNA 10
DIÁMETRO DEL TANQUE m	**Altura del tanque (m)/Número de anillos en el tanque completo**								**Máxima altura permisible m**
	2.4/1	**4.8/2**	**7.2/3**	**9.6/4**	**12/5**	**14.4/6**	**16.8/7**	**19.2/8**	
3	5.0	5.0	5.0	5.0	-----	-----	-----	-----	-----
4.5	5.0	5.0	5.0	5.0	5.0	----	----	-----	-----
6	5.0	5.0	5.0	5.0	5.0	5.0	----	-----	-----
7.5	5.0	5.0	5.0	5.0	5.0	5.0	5.0	5.0	-----
8	5.0	5.0	5.0	5.0	5.0	5.0	5.0	5.0	-----

Fuente: Norma API 650, Tabla A.4a, Edición 2013
Elaborado por: El autor

En la Tabla 7 que corresponde a la tabla A.4a de la Norma API 650, se detalla los espesores típicos en función del diámetro a aplicarse en tanques de almacenamiento. Los esfuerzos máximos permisibles para diseño (S_d) y para pruebas hidrostáticas (S_t) se encuentran tabulados en la Tabla A.2a de la Norma, así como la mínima resistencia a la fluencia y a la tracción, (S_y) y (S_{tr}) respectivamente.

3.2.2.3. Métodos de cálculo para determinar el espesor del cuerpo.

Los espesores a seleccionarse no deben ser menores a los que fija la tabla siguiente:

Tabla 8. Espesores de la plancha respecto al diámetro del tanque

Diámetro nominal del tanque	Espesor nominal de la plancha
(m)	(mm)
< 15	5
15 a < 36	6
36 a 60	8
> 60	10

Fuente: Norma API 650 (edición 2013)

3.2.2.3.1. Por el método de un pie.

Este método para calcular el espesor del cuerpo de un tanque de almacenamiento no es aplicable para tanques con diámetros mayores a 60 metros (200 pies).

Las fórmulas aplicadas son :

$$t_d = \frac{4{,}9 \times D \times (H - 0{,}3) \times G}{S_d} + CA \qquad \text{(por condiciones de diseño)}$$

$$t_t = \frac{4{,}9 D \times (H - 0{,}3) \times G}{S_t} \qquad \text{(por prueba hidrostática)}$$

Donde:

t_d: espesor de diseño del cuerpo, mm

t_t: espesor del cuerpo (prueba hidrostática), mm

D: diametro nominal del tanque, m

G: gravedad específica de diseño del líquido a almacenar

H: nivel de diseño del líquido, m

CA: tolerancia por corrosión, mm

S_d: esfuerzo admisible para la condición de diseño, MPa

S_t: esfuerzo admisible para las condiciones de prueba hidrostática, MPa

El espesor mínimo requerido para la plancha debe ser el mayor valor que se obtenga del cálculo por el método de un pie, basados en el literal 5.6.3.2 de la Norma API 650.

En la tabla 9 se muestran los valores el esfuerzo de diseño S_d y el esfuerzo de prueba hidrostática S_t, que se usarán para el calculo del espesor de los anillos por el metodo de un pie para un acero ASTM A36.

Tabla 9. Esfuerzos de Diseño y Prueba Hidrostática del material del cuerpo

Especificación	Mínimo esfuerzo a la fluencia (MPa)	Mínimo esfuerzo a la tensión (MPa)	Esfuerzo de diseño S_d (MPa)	Esfuerzo de prueba hidrostática S_t (MPa)
ASTM A36	250	400	**160**	**171**

Fuente: Norma API 650 (edición 2013)

a) Cálculo del primer anillo

<u>Cálculos por diseño</u>:

$$t_d = \frac{4.9 \times D \times (H - 0.3) \times G}{S_d} + CA$$

$$t_d = \frac{4.9 \times 4.5(7 - 0.3) \times 1.0}{160} + 3.175$$

$$\mathbf{t_d = 4.125\ mm}$$

Por prueba hidrostática:

$$t_t = \frac{4.9 \times 4.5(7 - 0.3) \times 1.0}{171}$$

$$\mathbf{t_t = 0.890\ mm}$$

b) Cálculos del segundo anillo

Cálculo por diseño:

$$t_d = \frac{4.9\ \times 4.5[(7 - 2.4) - 0.3] \times 1.0}{160} + 3.175$$

$$\mathbf{t_d = 3.795\ mm}$$

Por prueba hidrostática:

$$t_t = \frac{4.9 \times 4.5[(7 - 2.4) - 0.3] \times 1.0}{171}$$

$$\mathbf{t_t = 0.580\ mm}$$

c) Cálculos del tercer anillo

Cálculos por diseño:

$$t_d = \frac{4.9\ \times 4.5[(7 - 4.8) - 0.3] \times 1.0}{160} + 3.175$$

$$\mathbf{t_d = 3.464\ mm}$$

Por prueba hidrostática:

$$t_t = \frac{4.9 \times 4.5[(7 - 4.8) - 0.3] \times 1.0}{171}$$

$$\mathbf{t_t = 0.271\ mm}$$

Los espesores de las láminas para la fabricación del cuerpo de los tanques de almacenamiento fueron seleccionados de acuerdo a los valores determinados por la Norma API 650 y que estan descritos en la tabla 8; además especifica que el espesor nominal del primer anillo no puede ser menor de 6mm. Por esta razon, los espesores adoptados para el rediseño son los que se detalla en la tabla 10 que a continuacion se presenta:

Tabla 10. Espesores calculados y adoptados para el cuerpo de los tanques

ANILLOS	Espesor mínimo (mm)	Espesor adoptado (mm)
Primer anillo	4.125	6
Segundo anillo	3.795	5
Tercer anillo	3.464	5

Elaborado por : El autor

El material a usarse es Acero A36 (2400 mm x 6000 mm) con los espesores adoptados para cada anillo.

3.2.3. Selección de los pasos de hombre

Los pasos de hombre son accesorios que permiten la ventilación del tanque y el acceso al personal para realizar inspecciones de mantenimiento. Mediante la Tabla 5.3a de la Norma API 650 (Anexo F), se selecciona un diámetro de 600 mm para el diseño de estos pasos. En la figura 15 que se presenta a continuación, se

identifica las partes que conforman los pasos de hombre: Abertura, cuello, brida, placa de refuerzo, empaque, agujero de seguridad, tapa y los pernos de la brida.

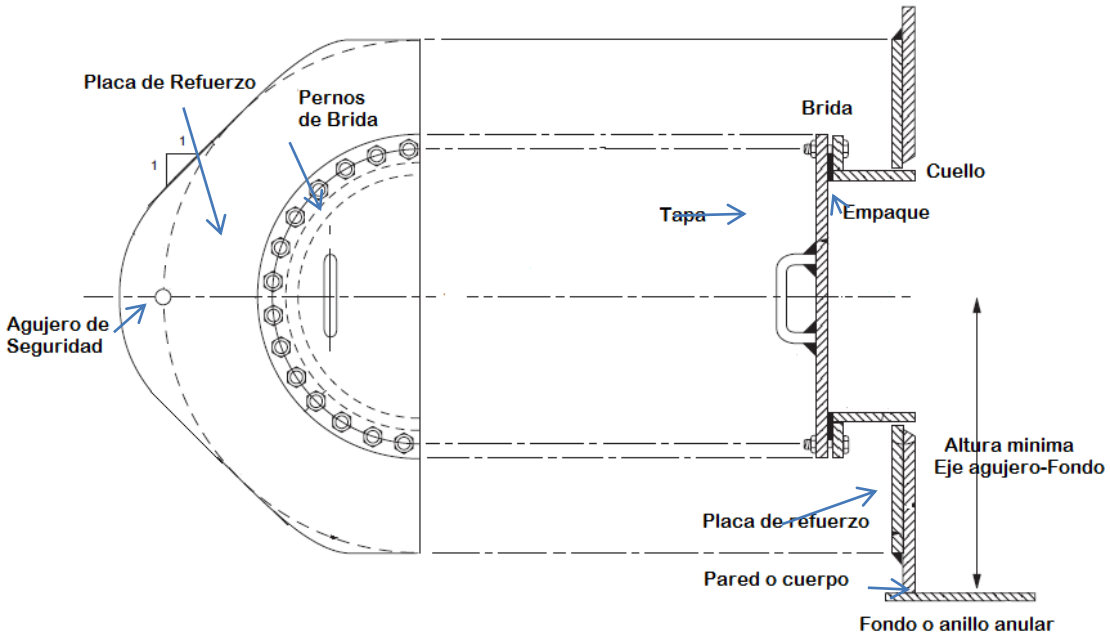

Figura 16. Partes del paso de hombre para el cuerpo del tanque
Fuente: Norma API 650 (edición 2013)
Elaborado por : El autor

De acuerdo a la figura 19 que corresponde a la tabla 5.7a de la Norma API 650, el número y tamaño de los pernos y agujeros correspondientes a un diámetro de 600 mm es 20 pernos de 20 mm. El empaque que se colocará tendrá un diámetro exterior de 746 mm, diámetro interior 610 mm. y un espesor de 3 mm. La altura mínima, desde la base del tanque hasta el centro del agujero del paso de hombre, será de 750 mm. No se colocará estos pasos a los niveles de las soldaduras horizontales ni verticales de las juntas de los anillos, es decir, estarán colocadas en las áreas de las placas.

Dimensión del Paso de hombre	Número y tamaño de los pernos
De 500 mm y 600 mm	28 pernos de diámetro 20 mm y orificios de 23 mm
De 700 mm y 900 mm	32 pernos de diámetro 20 mm y orificios de 23 mm
Dimensión del Paso de hombre	**Dimensiones de los Empaques**
Pasos de hombre 500mm	OD: 645 mm ID: 506 mm espesor: 3mm
600 mm	OD: 746 mm ID: 610 mm espesor: 3mm
750 mm	OD: 889 mm ID: 762 mm espesor: 3mm
900 mm	OD: 1051 mm ID: 914 mm espesor: 3mm

Tabla 11. Selección de pernos y orificios para pasos de hombres del cuerpo

Fuente: Tabla 5.7a Norma API 650, edición 2013.

Los cuellos estarán soldados al cuerpo por medio de una junta de filete en el perímetro (penetración completa), estando unido en un sólo lado o en ambos, como indica la figura:

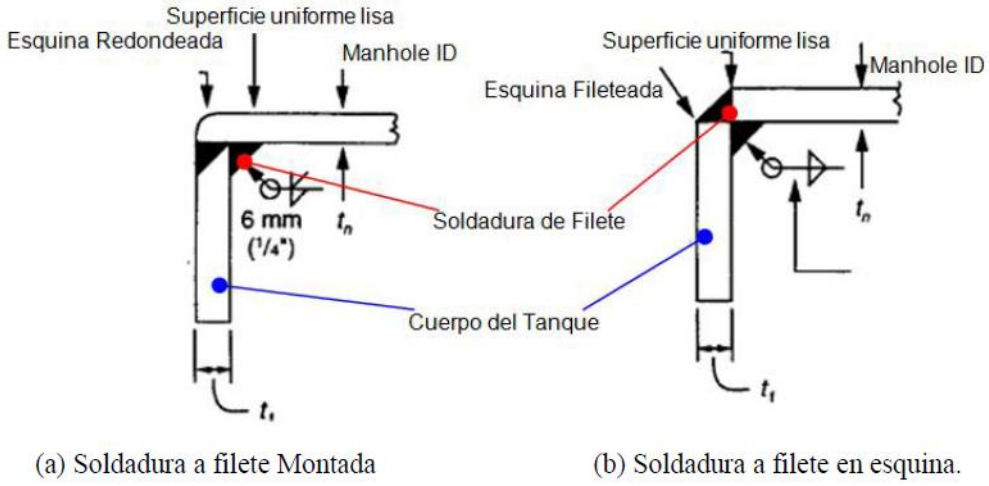

Figura 17. Tipo de soldadura para el cuello del Paso de Hombre
Fuente: Norma API 650 (edición 2013)
Elaborado por : El autor

La selección del diámetro del paso de hombre estará determinada por acuerdo entre el comprador y el fabricante. Usando la tabla 11 que corresponde a la tabla 5.3a de la Norma API 650, se obtiene el espesor de placa de tapa t_c y el espesor de

la brida empernada t_f, conocida la altura máxima del nivel del líquido (6,7 m y el diámetro 600 mm.).

Tabla 12. Espesor de tapa y brida empernada del paso de hombre

COLUMNA 1	COLUMNA 2	COLUMNA 3	COLUMNA 4	COLUMNA 5	COLUMNA 7	COLUMNA 8	COLUMNA 9
Máximo nivel de diseño m	**Presión equivalente Kpa**	**Espesor mínimo de la tapa (t_c), mm**			**Espesor mínimo de la brida (t_f), mm**		
		Paso 500 mm	**Paso** 600 mm	**Paso** 750 mm	**Paso** 500 mm	**Paso** 600 mm	**Paso** 750 mm
5.2	51	8	10	11	6	6	8
6.7	66	10	**11**	13	6	**8**	10
8.0	78	10	11	14	6	8	11
9.9	97	11	13	16	8	10	13

Fuente: Norma API 650, Tabla 5.3a, Edición 2013
Elaborado por : El autor

$$t_c = 11\ mm$$

$$t_f = 8\ mm$$

De la misma manera, se obtiene el espesor del cuello, ingresando en la tabla 12 la informacion del espesor del cuerpo y el diámetro del paso de hombre.

Tabla 13. Dimensiones de espesores para cuellos de pasos de hombre

Espesor del cuerpo (t) mm	Mínimo espesor del cuello (tn)			
	Diámetro de paso 500 mm	**Diámetro de paso 600 mm**	**Diámetro de paso 750 mm**	**Diámetro de paso 900 mm**
5	5	5	5	5
6	6	6	6	6
8	6	6	8	8
10	6	6	8	10
11	6	6	8	10

Fuente: Norma API 650, Tabla 5.4a, Edición 2013
Elaborado por : El autor

Luego, el espesor es:

$$\mathbf{t_n = 6\ mm}$$

Para el cuerpo se dispondrá de un paso de hombre, de acuerdo a las dimensiones obtenidas anteriormente.

3.2.4. Selección de las boquillas para el cuerpo.

En el cuerpo de cada tanque, se insertará tres boquillas, con las medidas correspondientes determinados mediante el uso de la Tabla 5.6b de la Norma API 650 (anexo F).

La tabla 13 presenta las dimensiones correspondientes para la boquilla de salida de combustible, que va insertada en el cuerpo del tanque.

Tabla 14. Datos de la boquilla de salida de combustible para el cuerpo.

Cantidad	01
Tamaño, NPS	6
Diámetro exterior de la tubería, OD	168.3 mm
Espesor nominal de pared de tubería de la boquilla bridada, t_n	10.97 mm
Diámetro del orificio en la placa de refuerzo, D_R	171 mm
Longitud de la placa de refuerzo, L	400 mm
Ancho de la placa de refuerzo, W	495 mm
Distancia mínima desde el cuerpo a la cara de la brida, J	200 mm
Distancia desde el fondo al eje central de la boquilla	306 mm

Elaborado por : El autor
Fuente: Norma API 650 (edición 2013)

La tabla 14 presenta las dimensiones correspondientes para la boquilla de entrada de combustible, que va insertada en el cuerpo del tanque.

Tabla 15. Datos de la boquilla de entrada de combustible para el cuerpo

Cantidad	01
Tamaño, NPS	4
Diámetro exterior de la tubería, OD	114.3 mm
Espesor nominal de pared de tubería de la boquilla bridada, t_n	8.56 mm
Diámetro del orificio en la placa de refuerzo, D_R	117 mm
Longitud de la placa de refuerzo, L	305 mm
Ancho de la placa de refuerzo, W	385 mm
Distancia mínima desde el cuerpo a la cara de la brida, J	175 mm
Distancia desde el fondo al eje central de la boquilla	259 mm

Elaborado por : El autor
Fuente: Norma API 650 (edición 2013)

La tabla 15 presenta las dimensiones correspondientes para la boquilla de drenaje del combustible que va insertada en la parte inferior el cuerpo del tanque y conectada al sumidero de fondo.

Tabla 16. Datos de la boquilla del cuerpo para el drenaje de combustible

Cantidad	01
Tamaño, NPS	3
Diámetro exterior de la tubería, OD	88.9 mm
Espesor nominal de pared de tubería de la boquilla bridada, t_n	7.62 mm
Diámetro del orificio en la placa de refuerzo, D_R	92 mm
Longitud de la placa de refuerzo, L	265 mm
Ancho de la placa de refuerzo, W	345 mm
Distancia mínima desde el cuerpo a la cara de la brida, J	175 mm
Distancia desde el fondo al eje central de la boquilla	239 mm

Elaborado por : El autor
Fuente: Norma API 650 (edición 2013)

La figura 19 presenta el modelo de las boquillas de brida simple y su respectivo refuerzo tipodiamante estan diseñadas para cuerpo del tanque.

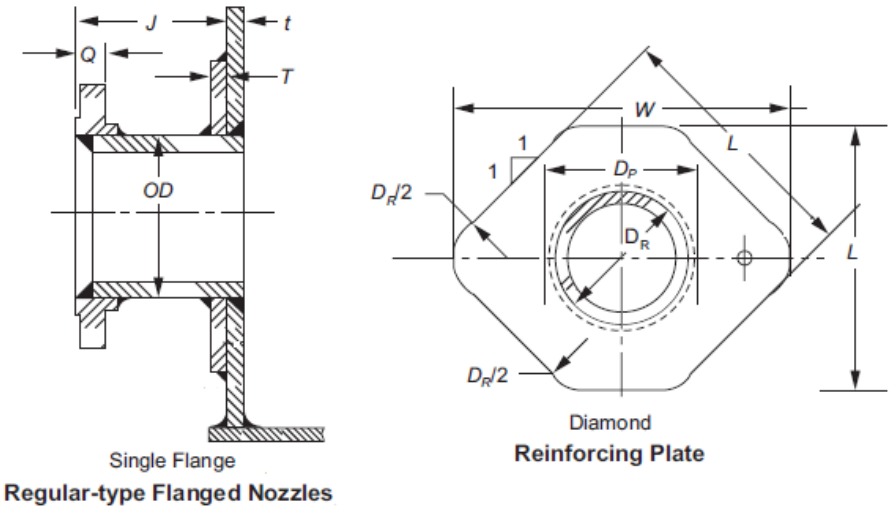

Figura 18. Modelo de la boquilla y placa de refuerzo tipo diamante
Fuente: Norma API 650 (edición 2013)

3.2.5. Selección de las bridas de las boquillas para el cuerpo

En el cuerpo del tanque, se insertará bridas con las medidas correspondientes de acuerdo a la Tabla 5.8a (anexo F) de la norma API 650.

La tabla 16 presenta las dimensiones de diseño de la brida que corresponde para la boquilla de salida del combustible.

Tabla 17. Dimensiones para la brida de la boquilla de salida

Espesor mínimo de la brida	25 mm
Diámetro exterior de la brida	280 mm
Diámetro del círculo para pernos	241 mm
Número de orificios	8
Diámetro de los orificios	23 mm
Diámetro de los pernos	20 mm

Fuente: Norma API 650 (edición 2013)
Elaborado por : El autor

La tabla 17 indica las dimensiones de diseño de la brida que corresponde para la boquilla de entrada del combustible.

Tabla 18. Dimensiones para la brida de la boquilla de entrada

Espesor mínimo de la brida	24 mm
Diámetro exterior de la brida	230 mm
Diámetro del círculo para pernos	190 mm
Número de orificios	8
Diámetro de los orificios	19 mm
Diámetro de los pernos	16 mm

Fuente: Norma API 650 (edición 2013)
Elaborado por : El autor

3.3. Diseño del fondo del tanque

3.3.1. Espesor para el fondo del tanque

El espesor de las planchas para el fondo del tanque debe ser de 6 mm obtenido mediante el uso de la tabla 18, ademas debe adicionarse el espesor por corrosión determinado por el comprador (3.175 mm). El fondo del tanque tiene mayor espesor debido a que las impurezas tienden a depositarse en el fondo existiendo mayor desgaste.

Tabla 19. Espesor (t_b) de la placa anular de fondo (SI)

Espesor de la placa del primer anillo (mm)	**Esfuerzo en el primer anillo del cuerpo (Mpa)**			
	≤ 190	≤ 210	≤ 220	≤ 250
t ≤ 19	6	6	7	9
19 < t ≤ 25	6	7	10	11
25 < t ≤ 32	6	9	12	14
32 < t ≤ 40	8	11	14	17
40 < t ≤ 45	9	13	16	19

Fuente: Norma API 650, Tabla 5.1.a, Edición 2013
Elaborado por : El autor

Los espesores considerados en la tabla anterior están bajo las condiciones de base de hormigón uniforme según el anexo “B” de la la Norma API 650.

Luego, el espesor total del fondo será:

$$e_{fondo} = 6 + 3.175 = 9.175\ mm.$$

$$\boldsymbol{e_{fondo} = 10\ mm}$$

Todas las planchas rectangulares para armar el fondo deben tener un ancho mínimo de 1800 mm, según recomendación de la Norma. Como los esfuerzos admisibles son $S_d = 160\ MPa$ y $S_t = 171\ MPa$, las placas serán soldadas a tope.

En el punto 5.4.4 de la Norma API 650 se especifica que el fondo tendrá una pendiente de 1:120 hacia el centro del tanque, y será obtenida de acuerdo al diseño de la base de hormigón que asentará el tanque. El fondo tendrá una ceja de 51 mm como mínimo desde el filo, lo cual permitirá perforar orificios en el perímetro del tanque que servirá para anclarlo a la base de hormigón.

3.4. Diseño del techo

El tipo de techo a construirse es cónico autosoportado (tanques pequeños). El techo es de forma cónica con placas soldadas a tope, capaz de sostenerse sin ningún elemento estructural. Es soportado en su periferia por el perfil de coronamiento como se muestra en la figura 20 que a continuacion se detalla.

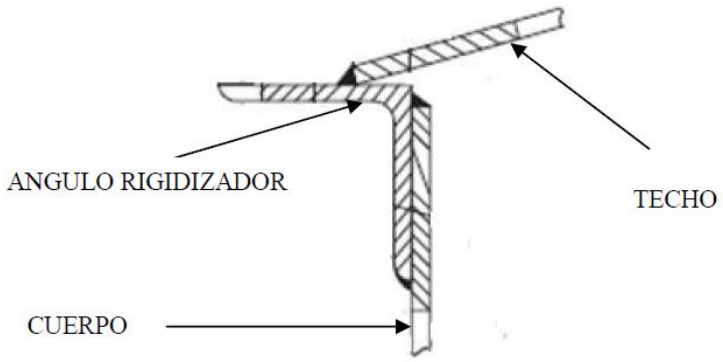

Figura 19.Esquema de la sección cuerpo-techo
Fuente: Norma API 650 (edición 2013)
Elaborado por : El autor

La selección de este tipo de techo es debido a que están diseñados y calculados para tanques que no exceden de un diámetro de 18,288 m. Por lo tanto, se recomienda el montaje en tanques con diámetros máximos de 12,192 m. La pendiente máxima para este tipo de techos es 37° (pendiente 9:12) y la mínima, 9,5° (pendiente 2:12), con respecto a la horizontal. La pendiente seleccionada es de 10°. El montaje de las láminas del techo requiere que el espesor no sea menor de 5 ni mayor de 13 mm. Finalmente, se optó por usar el espesor 5 mm, cumpliendo lo descrito en la Norma API 650.

3.4.1. Selección de los accesorios del techo

3.4.1.1. Paso de hombre

La tabla 19 que corresponde a la tabla 5.13a de la Norma API 650 describe las dimensiones del paso de hombre que se usa en tanques verticales. A continuación, se muestra la informacion correspondiente a este elemento.

Tabla 20. Dimensiones para pasos de hombre en techos de tanques (SI)

Columna 1	Columna 2	Columna 3	Columna 4	Columna 5	Columna 6	Columna 7	Columna 8	Columna 9
Tamaño del paso	Diámetro del cuello ID	Diámetro de la tapa Dc	Diámetro de los pernos D_B	Número de pernos	Diámetro del empaque		Diámetro del agujero del techo o placa de refuerzo D_P	Diámetro exterior de la placa de refuerzo D_R
					Interior	Exterior		
500	500	660	597	16	500	660	524	1050
600	600	762	699	20	600	762	625	1150

Fuente: Norma API 650, Tabla 5.13a, Edición 2013.
Elaborado por : El autor

Se seleccionó un tamaño de paso de hombre de 600 mm y las correspondientes dimensiones de los accesorios que se instalará con este elemento. En la figura 21, que se presenta a continuacion, se indica la nomenclatura y dimensiones para el paso de hombre del techo, con su respectiva tapa y brida.

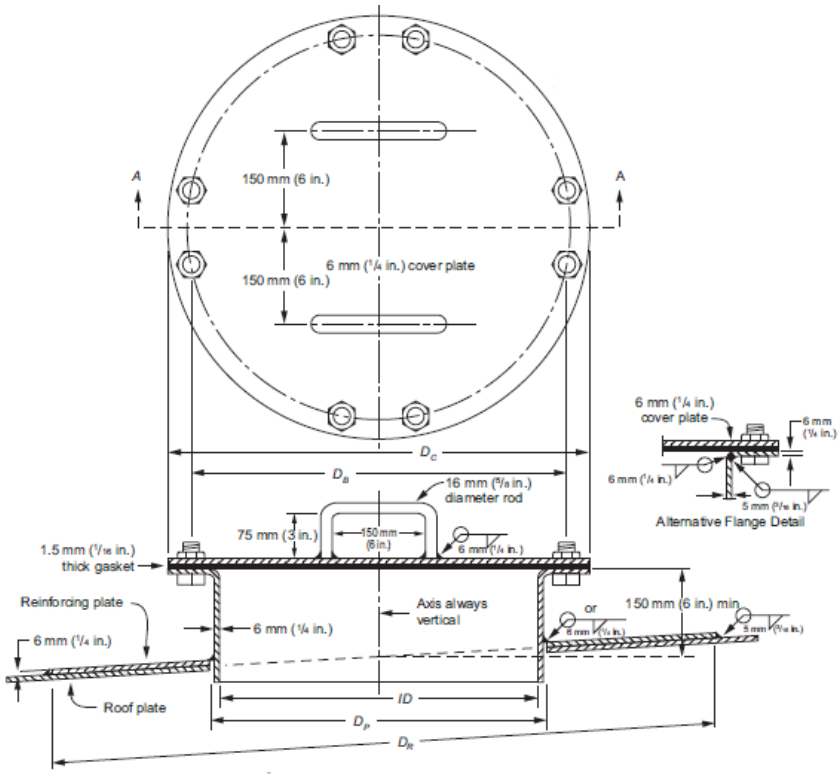

Figura 20. Dimensiones del paso de hombre para techo
Fuente: Norma API 650 (Edición 2013)

3.4.1.2. Selección de boquillas para la ventilación del tanque

Las boquillas para el techo tienen la finalidad de acoplar válvulas de venteo o cuellos de ganso para el control de la presión interna del tanque. En la figura 22 se muestra la nomenclatura de las boquillas para el techo, indicando la posición de la placa de refuerzo.

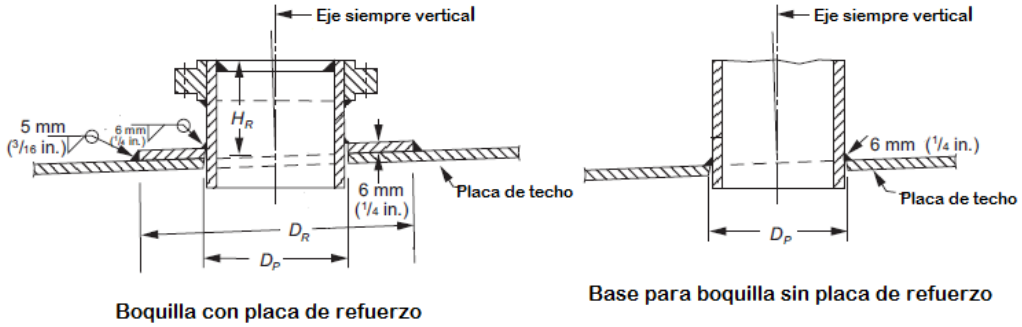

Figura 21. Nomenclatura de las boquillas para techos
Fuente: Norma API 650 (Edición 2013)

La tabla 20 que corresponde a la tabla 5.14a de la Norma API 650 muestra las dimensiones para la selección de la correspondiente boquilla de techo a ser instalada en el tanque.

Tabla 21. Dimensiones de las boquillas bridadas para techos (SI)

Columna 1	Columna 2	Columna 3	Columna 4	Columna 5
Boquilla NPS	**Diámetro exterior del cuello de la tubería**	**Diámetro del orificio en el techo o en la placa de refuerzo D_P**	**Altura mínima de la boquilla H_R**	**Diámetro exterior de la placa de refuerzo D_R**
1 1/2	48.3	50	150	125
2	60.3	65	150	175
3	88.9	92	150	225
4	114.3	120	150	275
6	168.3	170	150	375
8	219.1	225	150	450
10	273.0	280	200	550
12	323.8	330	200	600

Fuente: Norma API 650, Tabla 5.14a, Edición 2013.
Elaborado por : El autor

Se seleccionó dos boquillas de diámetro 6 (NPS); una para instalar un cuello de ganso y otra para una válvula de venteo, con las medidas respectivas de las placas de refuerzo, altura mínima de boquilla y diámetros exteriores de la placa de refuerzo.

3.4.1.3. Selección del sumidero de fondo

Este accesorio es el que permitirá desalojar los residuos de agua y/o petróleo que están por debajo del nivel de fondo del tanque, como se muestra en la figura 21 que a continuación se detalla.

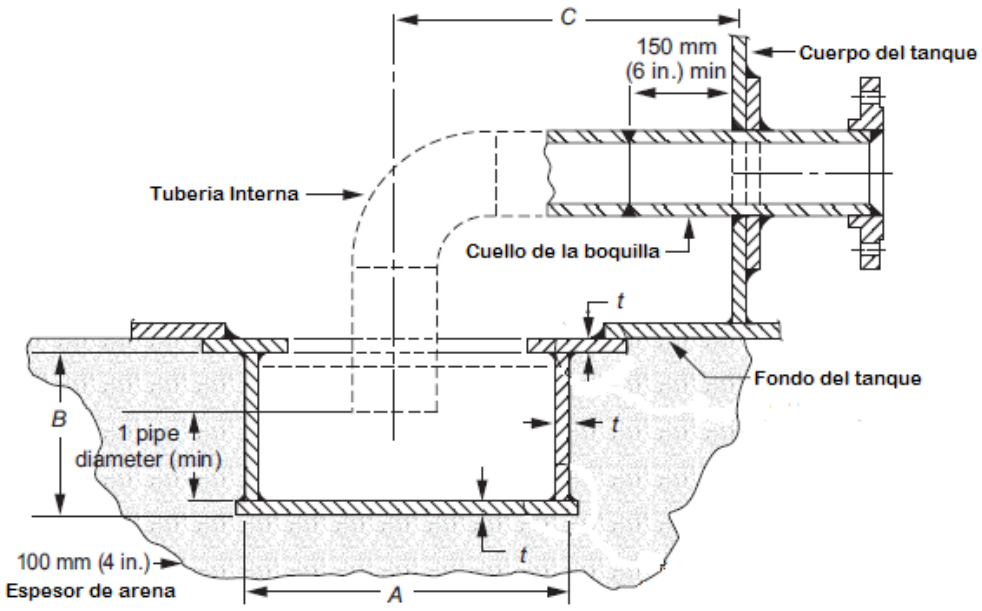

Figura 22. Dimensiones y nomenclatura para el sumidero de fondo
Fuente: Norma API 650 (Edición 2013)

La tabla 21 que corresponde a la tabla 5.16a de la Norma API 650 muestra las dimensiones para la selección del sumidero de fondo.

Tabla 22. Dimensiones para el sumidero de fondo (SI)

NPS	Diámetro del sumidero mm A	Profundidad del sumidero mm B	Distancia desde el centro de la tubería al cuerpo m C	Espesor de las placas en el sumidero mm t	Espesor mínimo de la tubería interna mm	Espesor mínimo del cuello de la boquilla mm
2	610	300	1.1	8	5.54	5.54
3	910	450	1.5	10	6.35	7.62
4	1220	600	2.1	10	6.35	8.56
6	1520	900	2.6	11	6.35	10.97

Fuente: Norma API 650, Tabla 5.16a, Edición 2013.
Elaborado por : El autor

Se seleccionó un diámetro nominal de tubería (NPS) de 2, con las correspondientes dimensiones para el diseño completo del sumidero

3.4.2. Diseño del anillo superior o ángulo de tope

Para el cálculo de este anillo, es preciso tomar en cuenta las áreas transversales de las láminas del techo, el último anillo del cuerpo del tanque y el área total del ángulo de tope. Esta área es conocida como área de compresión de la unión cuerpo-techo.

En la Norma API 650, están especificados los detalles de construcción y características geométricas que tendrá el área de compresión A, según se describe en la figura siguiente**:**

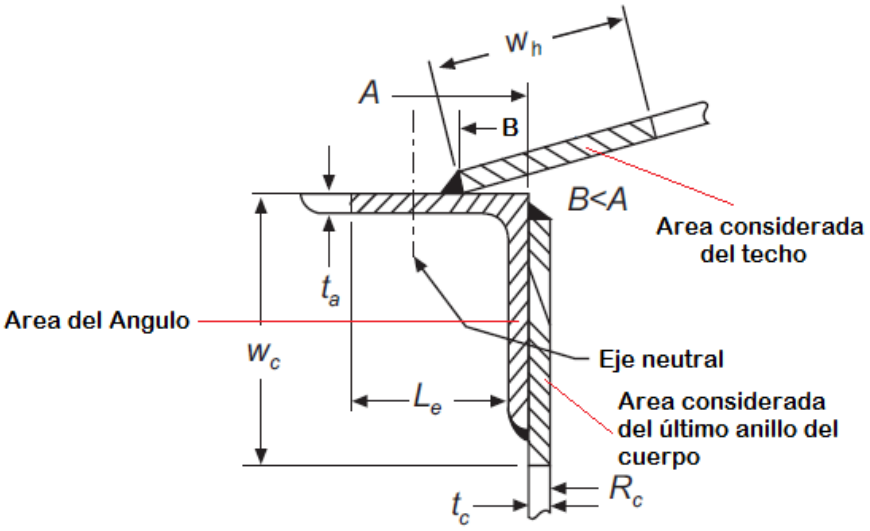

Figura 23. Área de compresión de la unión cuerpo-techo.
Fuente: Norma API 650 (Edición 2013)
Elaborado por: El autor

Donde:

A: distancia desde el filo del anillo hasta el eje neutral del ángulo, mm

B: distancia desde el filo del anillo hasta el tope de la lámina del techo, mm

W_c: máxima longitud considerada del cuerpo ($W_c = 0.6[R_c * t_c]^{0.5}$)

R_c: radio interior del tanque (radio nominal de tanque – espesor del último anillo).

t_c: espesor del último anillo, mm

W_h: máxima longitud considerada del techo ($W_h = 0.3\ [R_2 * t_h]^{0.5}$)

R_2: distancia perpendicular del techo al eje neutral ($R_c/\text{sen}\Theta$) ; Θ es la pendiente del techo

t_h: espesor de las placas del techo, mm

3.4.3. Cálculo del área de compresión requerida para la junta techo-cuerpo

Para determinar el valor de esta área , se calcula los pesos de los componentes del tanque .

a) Peso del cuerpo sin accesorios

$$A_{cuerpo} = \frac{\pi[D^2 - (D - 2t_c)^2]}{4}$$

$$A_{cuerpo} = \frac{\pi[4.5^2 - (4.5 - 2 \times .005)^2]}{4}$$

$$\boldsymbol{A_{cuerpo} = 0.0706\ m^2}$$

$$V_{cuerpo} = A_{cuerpo} \times H$$

$$V_{cuerpo} = 0.0706 \times 7.2$$

$$\boldsymbol{V_{cuerpo} = 0.5084\ m^3}$$

$$W_{cuerpo} = V_{cuerpo} \times \rho$$

$$W_{cuerpo} = 0.5084\ m^3 \times 7850\ {}^{kg}/_{m^3}$$

$$\boldsymbol{W_{cuerpo} = 3990.72\ kg}$$

b) Peso del techo con accesorios

- Peso del techo sin accesorios

$$A_{techo} = \frac{\pi \times D^2}{4}$$

$$A_{techo} = \frac{\pi \times (4.5)^2}{4}$$

$$A_{techo} = 15.9\ m^2$$

$$V_{techo} = A_{techo} \times e_{techo}$$

$$V_{techo} = 15.9\ m^2 \times .005\ m$$

$$V_{techo} = 0.0795\ m^3$$

$$W_{techo} = V_{techo} \times \rho$$

$$W_{techo} = \ 0.0795\ m^3 \times 7850\ {}^{kg}/_{m^3}$$

$$\boldsymbol{W_{techo} = 624.24\ kg}$$

- Peso de la boquilla (cuello de ganso)

$$V_{cuello1} = \frac{\pi \times (D_R^2 - NPS^2)}{4} \times H_R + \frac{\pi \times (D_R^2 - NPS^2)}{4} \times 33\ mm$$

$$V_{cuello1} = \frac{\pi \times (168.3^2 - 152.4^2)}{4} \times (150mm + 33\ mm)$$

$$V_{cuello1} = 732887.06\ \ mm^3$$

$$V_{brida1} = \ \frac{\pi \times (D_{ext\ brida}^2 - D_R^2)}{4} \times 6\ mm$$

$$V_{brida1} = \frac{\pi \times (280^2 - 168.3^2)}{4} \times 6\ mm$$

$$V_{brida1} = 235973.40\ mm^3$$

$$V_{boquilla1} = V_{cuello1} + V_{brida1}$$

$$V_{boquilla1} = (732887.06 + 235973.40\ ) mm^3$$

$$V_{boquilla1} = 968860{,}45\ mm^3$$

$$W_{boquilla1} = V_{boquilla\ 1} \times \rho$$

$$W_{boquilla\ 1} = 968860{,}45\ mm^3 \times 7850\ {}^{kg}/_{m^3}$$

$$\boldsymbol{W_{boquilla\ 1} = 7.6\ kg}$$

- Peso de la boquilla (válvula de venteo)

$$V_{cuello2} = \frac{\pi \times (D_R^2 - NPS^2)}{4} \times H_R + \frac{\pi \times (D_R^2 - NPS^2)}{4} \times 33\ mm$$

$$V_{cuello2} = \frac{\pi \times (168.3^2 - 152.4^2)}{4} \times (150mm + 33\ mm)$$

$$V_{cuello2} = 732887.06\ \ mm^3$$

$$V_{brida2} = \frac{\pi \times (D_{ext\ brida}^2 - D_R^2)}{4} \times 6\ mm$$

$$V_{brida2} = \frac{\pi \times (280^2 - 168.3^2)}{4} \times 6\ mm$$

$$V_{brida2} = 235973.40\ mm^3$$

$$V_{boquilla2} = V_{cuello2} + V_{brida2}$$

$$V_{boquilla2} = (732887.06 + 235973.40)mm^3$$

$$V_{boquilla2} = 968860{,}45\ mm^3$$

$$W_{boquilla2} = V_{boquilla\,2} \times \rho$$

$$W_{boquilla\,2} = 968860{,}45\ mm^3 \times 7850\ {}^{kg}/_{m^3}$$

$$\boldsymbol{W_{boquilla\,2} = 7.6\ kg}$$

- Peso del paso de hombre (techo)

Volumen de la tapa

$$V_{tapa} = \left[\frac{\pi(762^2)}{4} \times 6\right] mm^3$$

$$V_{tapa} = 2736220.39\ mm^3$$

Volumen de la brida

$$V_{brida} = \left[\frac{\pi(762^2 - 600^2)}{4} \times 6\right] mm^3$$

$$V_{brida} = 1039760.35\ mm^3$$

Volumen de cuello y tubería

$$V_{cuello} = \left[\frac{\pi\left(600^2 - 588^2\right)}{4} \times (150 + 33)\right]$$

$$V_{cuello} = 2048984.43\ mm^3$$

Volumen de la placa de refuerzo

$$V_{placa} = \left[\frac{\pi\left(1150^2 - 625^2\right)}{4} \times 6\right]$$

$$V_{placa} = 4391357.48\ mm^3$$

- Peso total del paso de hombre

$$W_{entrada} = \left(V_{tapa} + V_{brida} + V_{cuello} + V_{placa}\right) \times \rho$$

$$W_{entrad} = (2736220.39 + 1039760.35 + 2048984.43 + 4391357.48)\ mm^3 \times 7850\ {}^{kg}/_{m^3}$$

$$\boldsymbol{W_{entrada} = 80\ kg}$$

$$W_{accesorios} = W_{entrada} + W_{boquilla1} + W_{boquilla2}$$

$$W_{accesorios} = 80\ kg + 7.6\ kg + 7.6\ kg$$

$$\boldsymbol{W_{accesorios} = 95.2\ kg}$$

c) Peso del techo y accesorios

$$W_{techo_{acc}} = W_{techo} + W_{accesorios}$$

$$W_{techo_{acc}} = 624.24\ kg + 95.2\ kg$$

$$\boldsymbol{W_{techo_{acc}} = 719.44\ kg}$$

d) Peso del tanque

$$W_{tanque} = W_{cuerpo} + W_{techo_{acc}}$$

$$W_{tanque} = 3990.72\ kg + 719.44\ kg$$

$$\boldsymbol{W_{tanque} = 4710.16\ kg}$$

3.4.4. Determinación del area de compresión

a) Ancho efectivo de la envolvente W_c en el anillo superior

- Radio interno del tanque R_c

$$R_c = \frac{D}{2}$$

$$R_c = \frac{4500}{2}$$

$$\boldsymbol{R_c = 2250\ mm}$$

Luego, se tiene:

$$W_c = 0.6\sqrt{R_c \times t_c}$$

$$W_c = 0.6\sqrt{2250 \times 6}$$

$$\boldsymbol{W_c = 69.71\ mm}$$

- Radio de giro de la normal R_2

$$R_2 = \frac{R_c}{\sin \emptyset}$$

$$R_2 = \frac{2250}{\sin 10}$$

$$\boldsymbol{R_2 = 12597.23\ mm}$$

- Longitud efectiva del techo W_h

$$W_h = 0.3\sqrt{R_2 \times t_h}$$

$$W_h = 0.3\sqrt{12597.23 \times 5}$$

$$\boldsymbol{W_h = \ 76.36\ mm}$$

- Area considerada del techo

$$A_t = W_h \times t_h$$

$$A_t = 76.36\ mm \times 5mm$$

$$\boldsymbol{A_t = 381.8\ mm^2}$$

- Area considerada del cuerpo

$$A_c = W_c \times t_c$$

$$A_c = 69.71\ mm \times 6mm$$

$$\boldsymbol{A_c = 418.26\ mm^2}$$

Según la Norma API 650, cuando se requiere determinar el área de compresión mínima para una junta frágil para techos autosoportados, debe usarse la fórmula siguiente:

$$\boldsymbol{A_r = \frac{D_{LS}}{201000 \times \tan\theta}}$$

Donde:

A_r : área mínima de la sección transversal de la unión cuerpo-ángulo-techo.

D_{LS}: peso total del cuerpo, piso y cualquier estructura soportada por el cuerpo, excepto el peso de las planchas del techo

Θ: ángulo de inclinación del techo autosoportado en vista frontal.

Luego, se tiene:

$$A_r = \frac{W_{piso} + W_{cuerpo} + W_{escalera} + W_{accesorios}}{201000 \times \tan 10°}$$

$$A_r = \frac{(1276.95 + 3990.72 + 1360 + 500)(2.2)}{35441.72}$$

$$A_r = 0.44\ plg^2$$

Tabla 23. Dimensiones de los perfiles de coronamiento para tanques

Diámetro del tanque D	Tamaño mínimo del ángulo de tope Mm
D ≤ 11 m,	50 x 50 x 5
11 m < D ≤ 18 m	50 x 50 x 6
D> 18 m	75 x 75 x 10

Fuente: Norma API 650 (edición 2013)

De acuerdo a la tabla anterior, se seleccionó el perfil 50 x 50 x 5 mm para el montaje del tanque de almacenamiento.

3.4.5. Diseño de la escalera helicoidal.

La escalera es de tipo helicoidal, presentando las caracteristicas siguientes:

- Estructura: metálica
- Ancho de la escalera: 610 mm
- Angulo entre la escalera y la línea horizontal:60°
- Ancho de peldaños: 200 mm
- Elevación: uniforme a lo largo de toda la escalera.
- Peldaños: fabricados de material antideslizante o rejilla.

- La platina superior irá unida al pasamano de la plataforma. La altura vertical desde el peldaño hasta el borde del pasamanos: 800 mm.

- Distancia entre los postes de la rejilla a lo largo de la elevación: 2430 mm.

- Carga viva a soportar la estructura: 450 Kg.

- Carga a soportar la estructura del pasamanos: 90 Kg, en cualquier punto del barandal.

- Pasamanos: a un sólo lado de la escalera.

3.4.6. Protección catódica

Es una técnica que permite prevenir la corrosión. En este rediseño, se adoptará el tipo de protección por ánodo de sacrificio. Existirán 2 puntos de protección catódica con ánodos de magnesio ubicados a una distancia de 2 metros desde la pared de cada tanque.

3.4.7. Protección contraincendios y derrames

Durante las operaciones de almacenamiento, carga y descarga del combustible, pueden ocurrir condiciones de emergencias, tales como:

- Roturas o fisuras en los tanques de combustible.

- Derrames en la carga o descarga del producto.

- Incendio.

En caso de derrames ocasionados por las dos primeras condiciones, de acuerdo al Reglamento Ambiental de Actividades Hidrocarburíferas, emitido mediante Decreto Ejecutivo 1215 y publicado en el Registro Oficial 265 del 13 de febrero del 2001, en el articulo 25 literal b, enuncia que los tanques usados para el almacenamiento de petróleo y sus derivados, deberán estar rodeados por un cubeto tecnicamente diseñado con un volumen igual o mayor al 110% del tanque mayor, a fin de evitar contaminacion del ambiente.

El volumen del tanque es $115m^3$, por lo que el cubeto deberá tener una capacidad de $126.5m^3$.

Con las dimensiones siguientes se puede contener un volumen de $126.9m^3$.

- Longitud del cubeto: 13.5m
- Ancho del cubeto: 9.40m
- Altura del muro del cubeto: 1m

En el caso de incendio, para su control, se sugiere aplicar el método de aspersión de espuma a presión por boquillas y monitores, siendo el más adecuado para tanques de 500 a 5.000 barriles de capacidad y con diámetros no mayores de 30 pies, el cual es aplicable para este proyecto, basado en la Norma NFPA (National Fire Protection Association).

Específicamente, en el caso de incendios, el fuego a combatir será el tipo B (producidos por líquidos inflamables, combustibles derivados del petróleo, etc.).

El área aproximada para las operaciones de carga, descarga y almacenamiento del combustible Jet A-1 es de 500 m^2. Por lo tanto, se requiere que exista un sistema contraincendios fijo y otro portátil; además se debe instalar conexiones a tierra para neutralizar la existencia de corrientes estáticas que podrían ocasionar incendios.

Para el sistema portátil, se contará con dos extintores tipo manual y dos extintores tipo carrete (CO_2 y polvo químico seco), que estarán ubicados en las áreas de carga y descarga del combustible colocados estratégicamente en lugares de fácil acceso.

Figura 24. Extintor de polvo químico seco - 20 libras
Elaborado por: El autor

Figura 25. Extintor de dióxido de carbono – 50 libras
Elaborado por: El autor

Para el fijo, se tendrá un sistema hidráulico y uno de control. El hidráulico contará con un conjunto de tuberías, accesorios, boquillas, aspersores, monitores, bombas y un tanque en el cual estará la mezcla agua espuma, basados en la Norma NFPA.

El tipo de espuma es de baja expansión con base en la formación de una película acuosa en una proporción de 99 a 1(1 parte de espuma en 99 partes de agua), a una temperatura de 4°C a 37,8°C. Se realizará las conexiones de las tuberías para ubicar un rociador estandar tipo montante en cada tanque. Este rociador tendrá un área de acción efectiva de 8 m^2.

Figura 26. Rociador estandar tipo montante
Fuente: www.equiposcontraincendios.com.cl

Para el sistema de enfriamiento de los tanques, se requiere una salida por cada 3,53 metros de circunferencia. En las salidas, se ubicará deflectores para direccionar el líquido de enfriamiento hacia las paredes del tanque.

El control, se realizará por medio de dispositivos eléctricos accionados manualmente para el arranque y parada del sistema.

Todas estas instalaciones deben estar señaladas correctamente para su uso efectivo en casos de incendio y emergencias.

Para la detección y alarma, en el caso de la presencia de humo, calor o llama en sus inicios, se usarán dispositivos que originen una señal de alerta para iniciar el proceso de prevencion contraincendios, a traves del envío de esta señal hacia un panel de control que inmediatamente harán accionar una o varias alarmas y activaran los rociadores de espuma para combatir la posibilidad e incendio.

La instalación del sistema de detección contraincendios constará de :

- Equipo de control y señalización
- Detectores
- Canalizaciones
- Pulsadores manuales
- Luces y sirenas

En la figura 26 se muestra la ubicación del sistema de protección contraincencios.

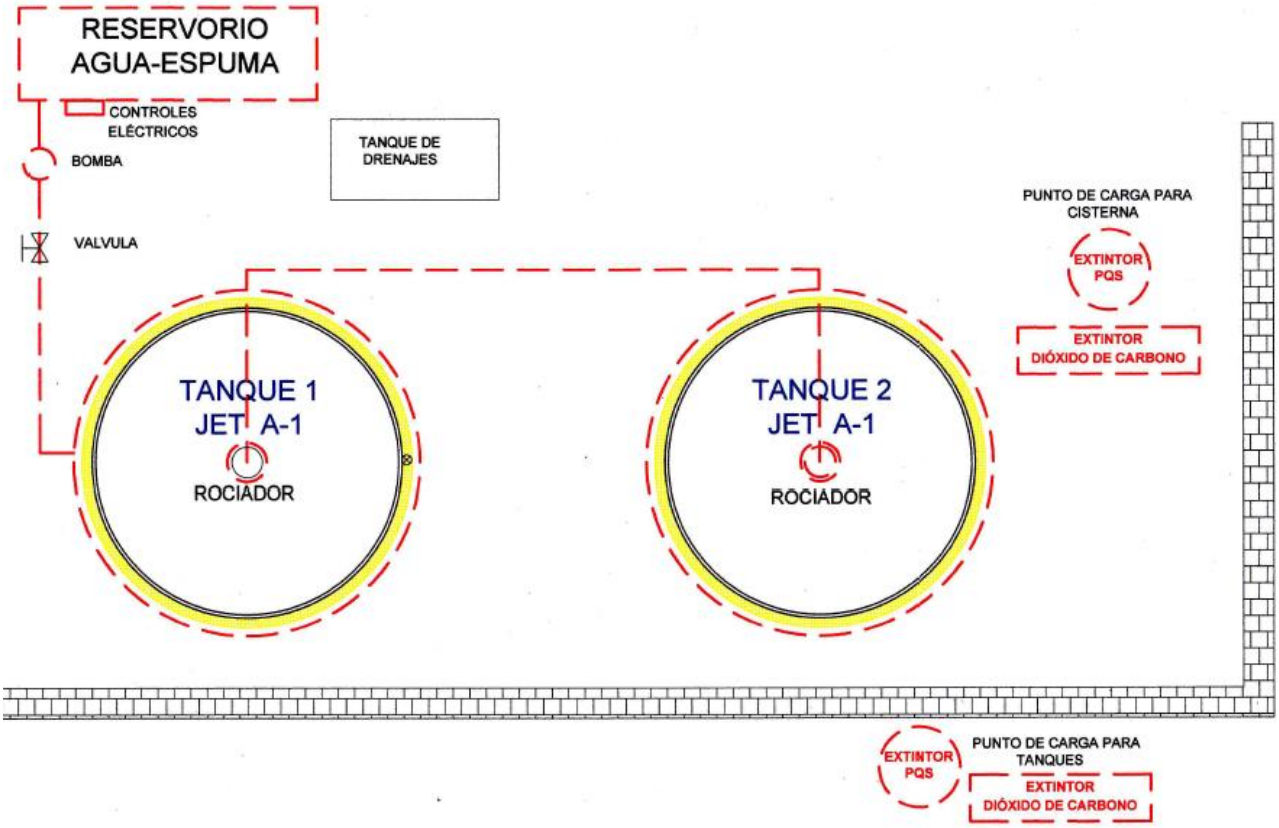

Figura 27. Distribución del sistema contraincendios fijo y móvil.
Elaborado por: El autor

3.5. Calibración de tanques

El método a emplearse en la calibración de tanques verticales será el geométrico, el cual está relacionado con los factores siguientes:

- Capacidad nominal del tanque
- Forma del tanque
- Ubicación y condiciones de uso, etc.

Los métodos geométricos son la aplicación de una medición directa o indirecta de las dimensiones exteriores o interiores del tanque y del techo o pantalla flotante, esto es, si son acoplados.

Para la calibración geométrica, se emplea los métodos siguientes:

- Método de Encintado para tanques cilíndricos verticales (ISO 7507-1).
- Método de la Línea Óptica de Referencia para tanques cilíndricos verticales (ISO 7507-2).
- Método de Triangulación Óptica para tanques cilíndricos verticales (ISO 7507-3).
- Método Electro-Óptico de distancias ordenadas mediante mediciones internas (ISO 7507-4).
- Método Electro-Óptico de distancias ordenadas mediante mediciones externas (ISO 7507-5).

El procedimiento para la medición externa por medio de una cinta, con un dispositivo para tensar, todavía, se usa en la calibración de tanques de combustible asignados al almacenamiento de productos. En cada uno de estos métodos, es necesaria una corrección por temperatura, debido a que, en el momento de la calibración del tanque, es común que exista producto en su interior, por lo que se ve afectada la estructura debido a la deformación que éste provoca en el cuerpo.

En estas calibraciones, se determina los espesores de chapas usando técnicas de ultrasonido con equipos de última generación, bajo condiciones de seguridad que las hacen aptas para trabajar en ambientes explosivos.

La obtención del nivel de fondo del tanque permite realizar un cálculo preciso del volumen de combustible existente, y, con la ayuda de un software particular, es posible obtener gráficos con curvas de nivel de fondo del tanque y gráficas con

cortes radiales del mismo. Cuando la calibración se hace desde el exterior de los tanques, se puede realizar con cualquier volumen de llene. En caso de que los tanques se encuentren aislados exteriormente, las mediciones de paredes y de espesores de chapas se realizará desde el interior del tanque. Por lo tanto, deberán estar vacíos y en condiciones seguras de ingreso: desgasificados, limpios y secos.

Esto permite la calibración de tanques aislados sin ningún inconveniente. Los métodos geométricos pueden ser usados en tanques con una capacidad nominal de alrededor de 50 m^3 y más, que posean forma geométrica regular y que no presenten deformaciones. En los cálculos para la elaboración de las tablas de calibraciones, se utiliza todos los procedimientos especificados por las recientes ediciones de Normas API e ISO.

3.6. Planos del proyecto

3.6.1. Instalaciones actuales

Actualmente, no existen planos de las instalaciones de superficie de la ESMA, por lo que, en la visita al lugar en que se encuentran los tanques de almacenamiento de combustible, se realizó la toma de dimensiones del tanque y sus instalaciones con cinta métrica para desarrollar un esquema de ubicación relativa y una implantación lo más aproximada posible de las mismas (Figura 1).

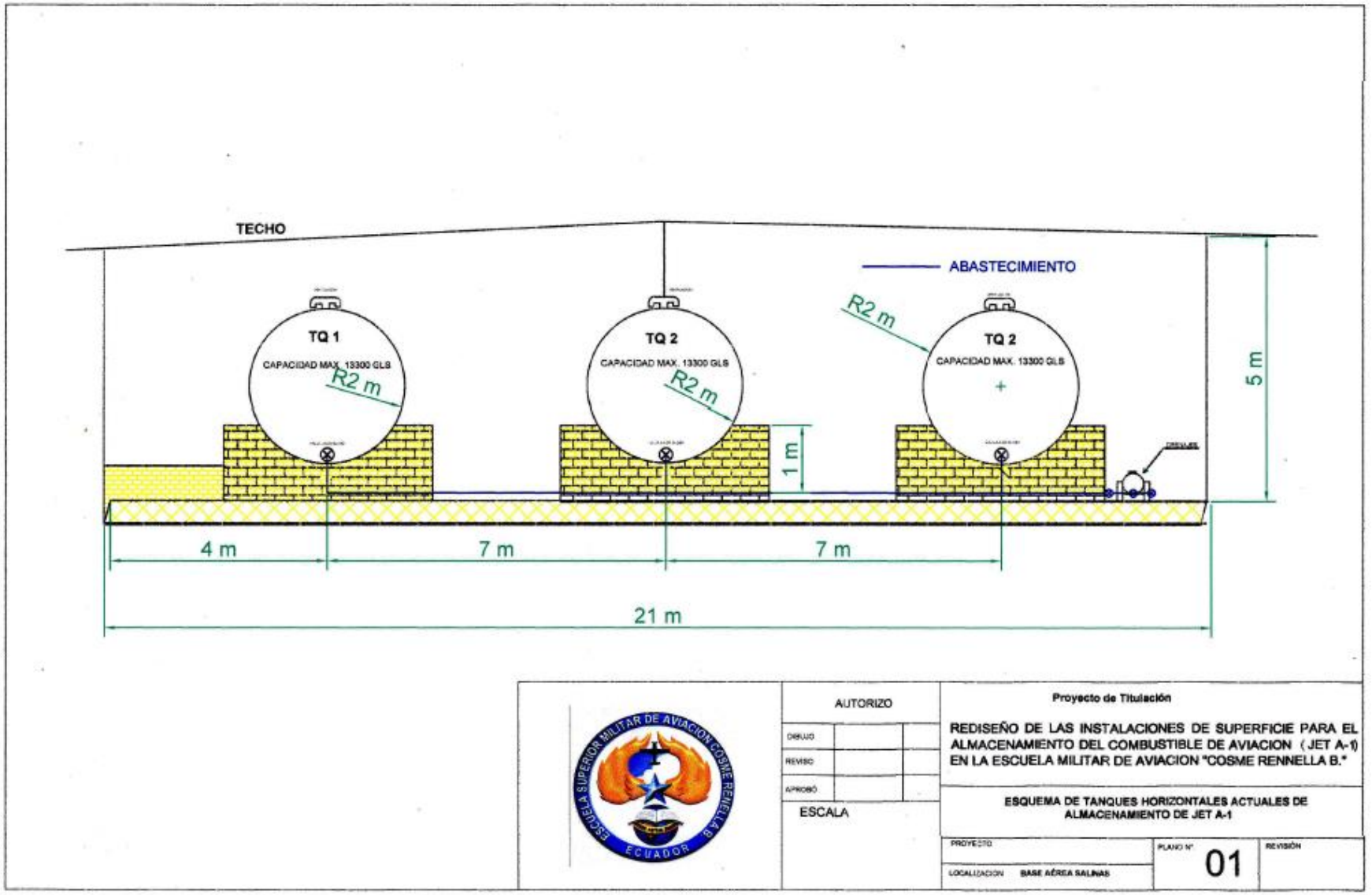

Fuente: Mediciones visita de campo Instalaciones ESMA
Elaborado por: El autor

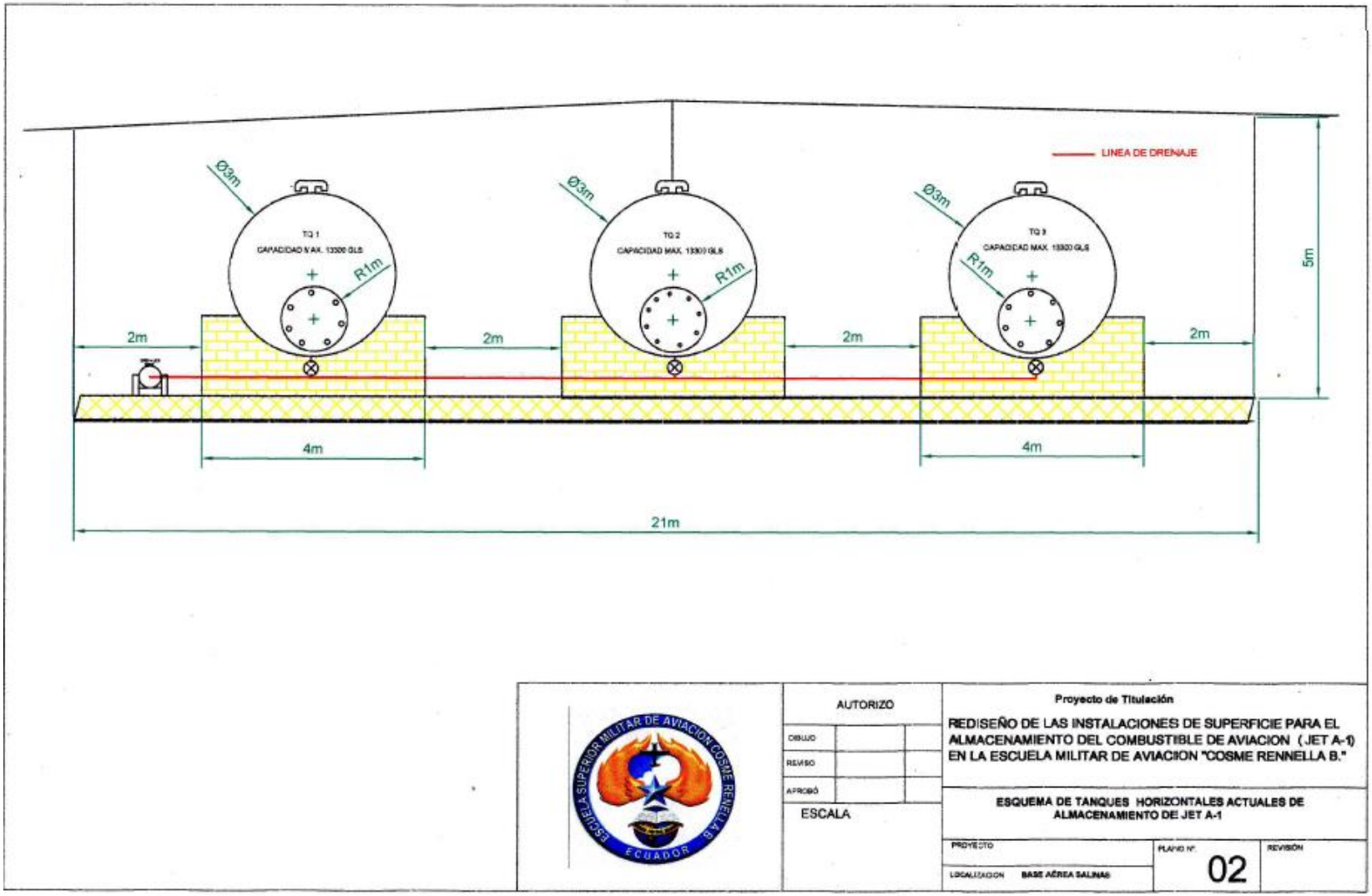

Fuente: Mediciones visita de campo Instalaciones ESMA
Elaborado por: El autor

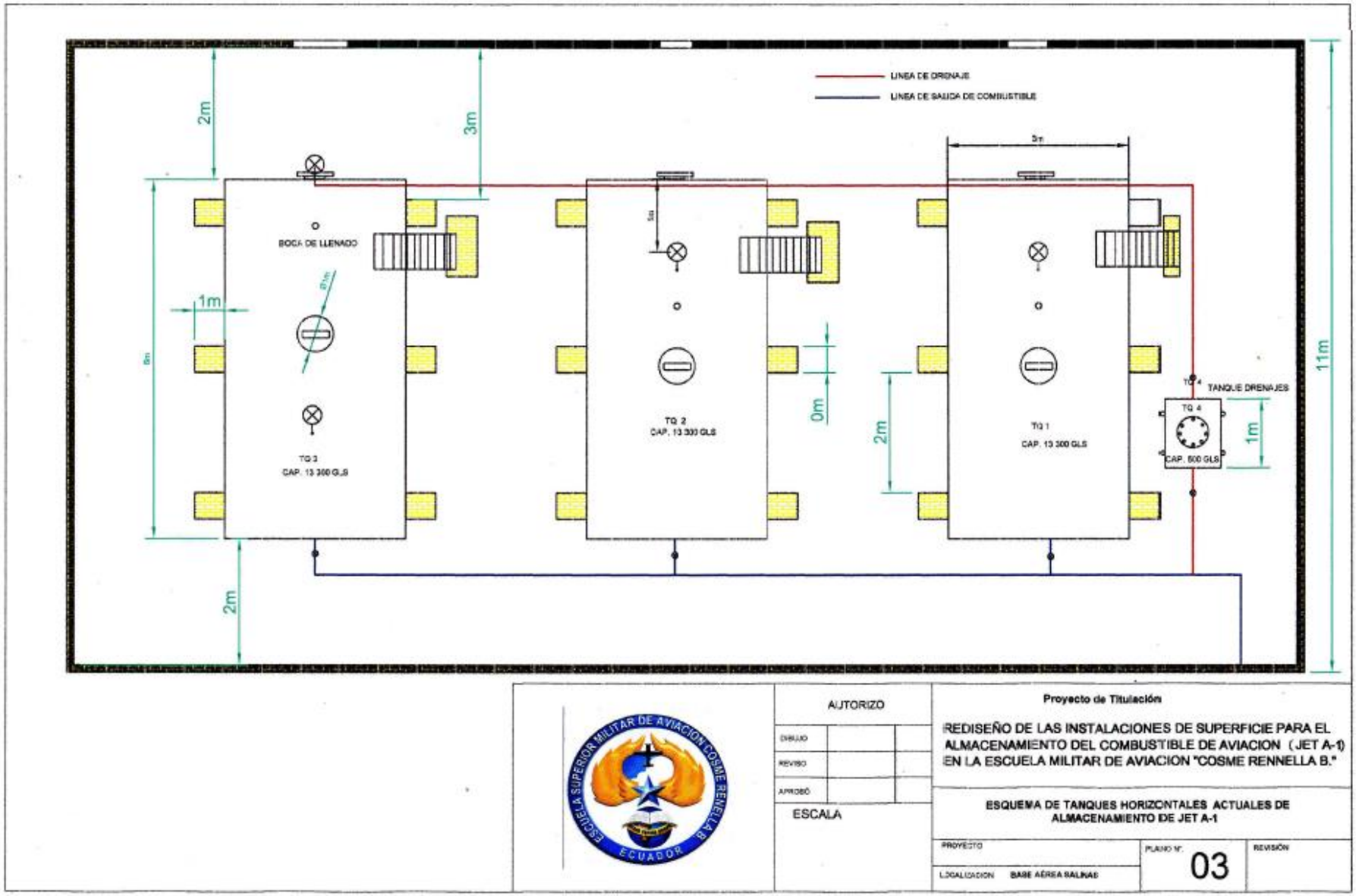

Fuente: Mediciones visita de campo Instalaciones ESMA
Elaborado por: El autor

3.6.2. Planos para el proyecto de rediseño

Se desarrolló 6 (seis) planos esquemáticos de la ubicación, partes y accesorios de las instalaciones de superficie que constarán en el rediseño de este proyecto.

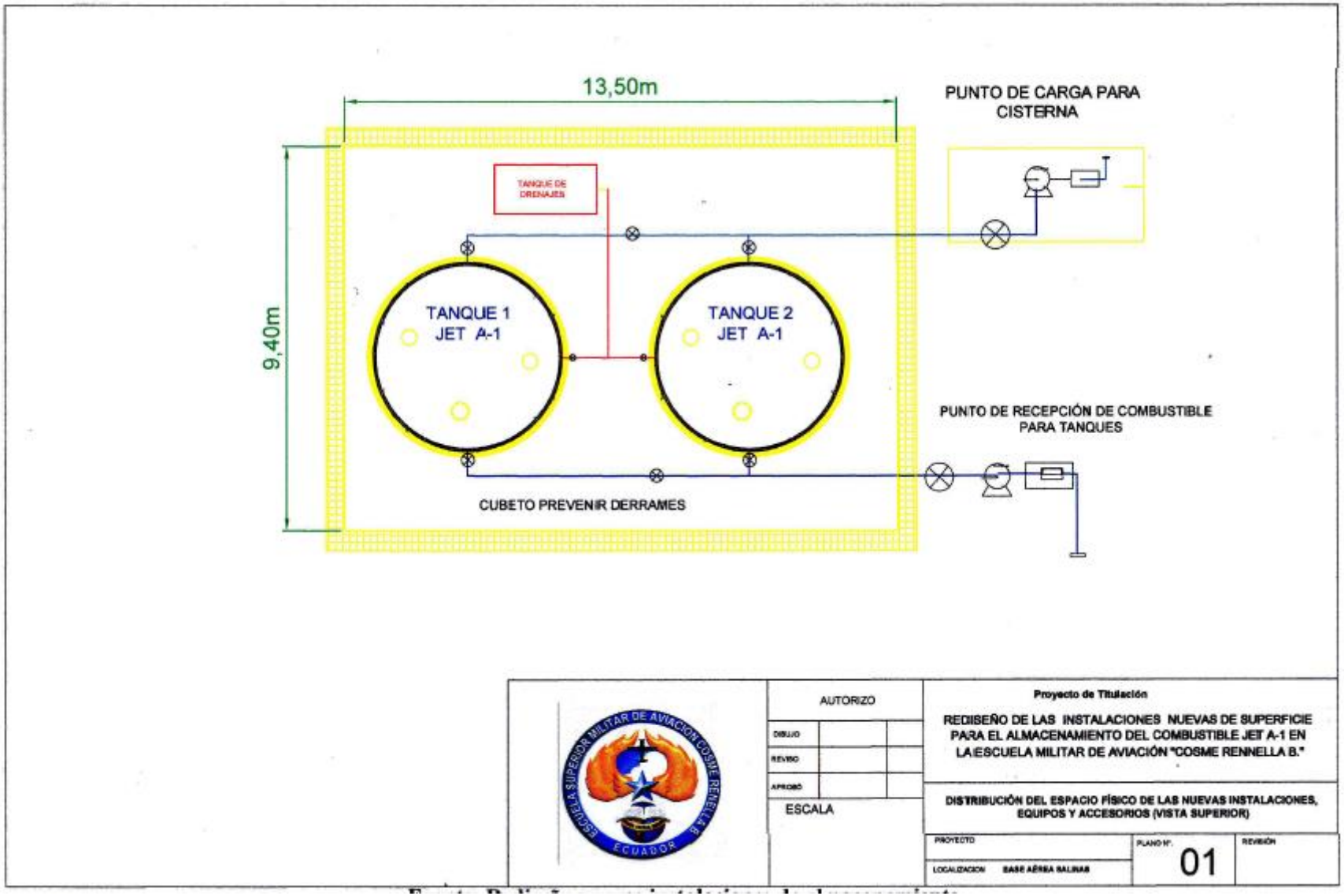

Fuente: Rediseño nuevas instalaciones de almacenamiento
Elaborado por: El autor

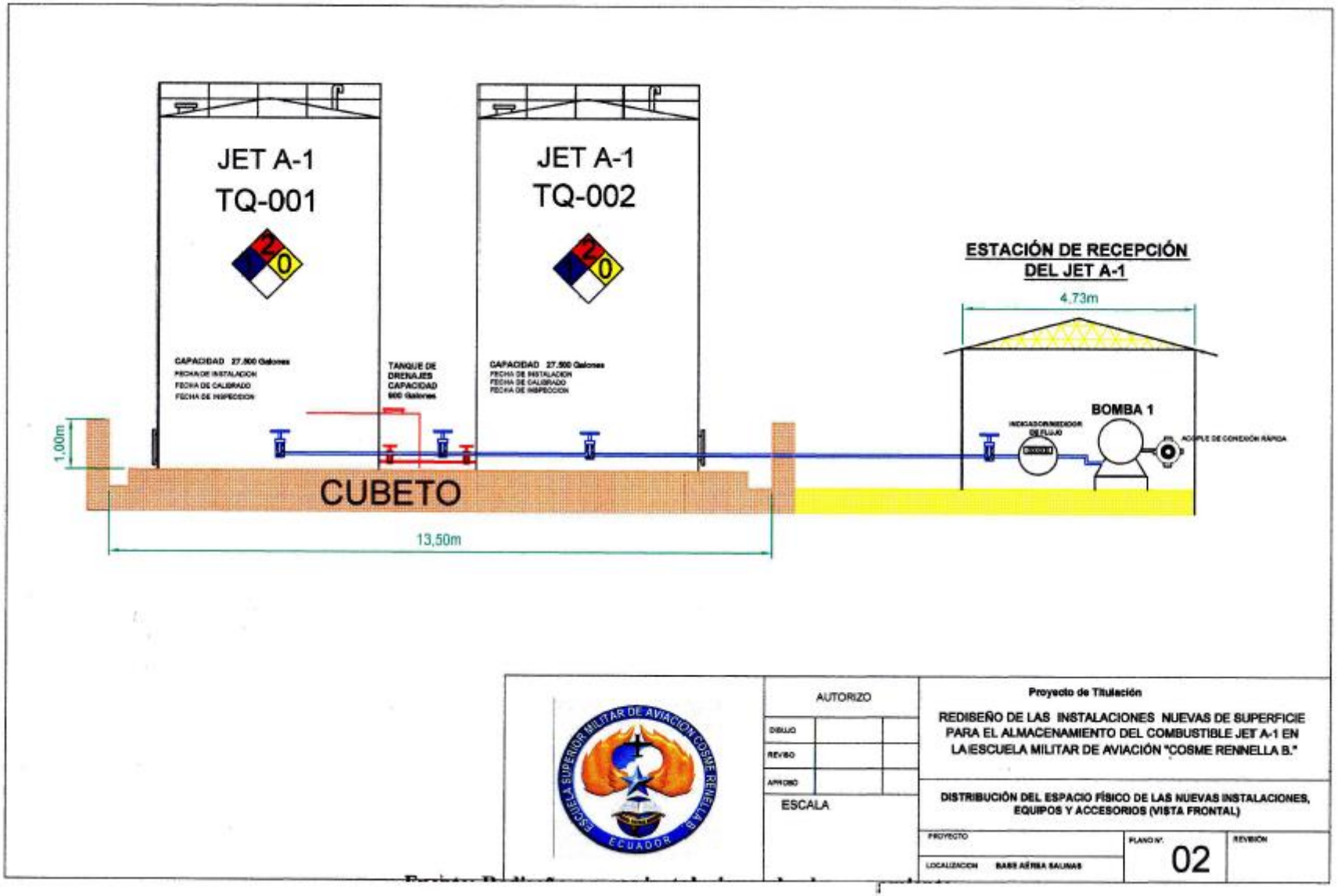

Fuente: Rediseño nuevas instalaciones de almacenamiento
Elaborado por: El autor

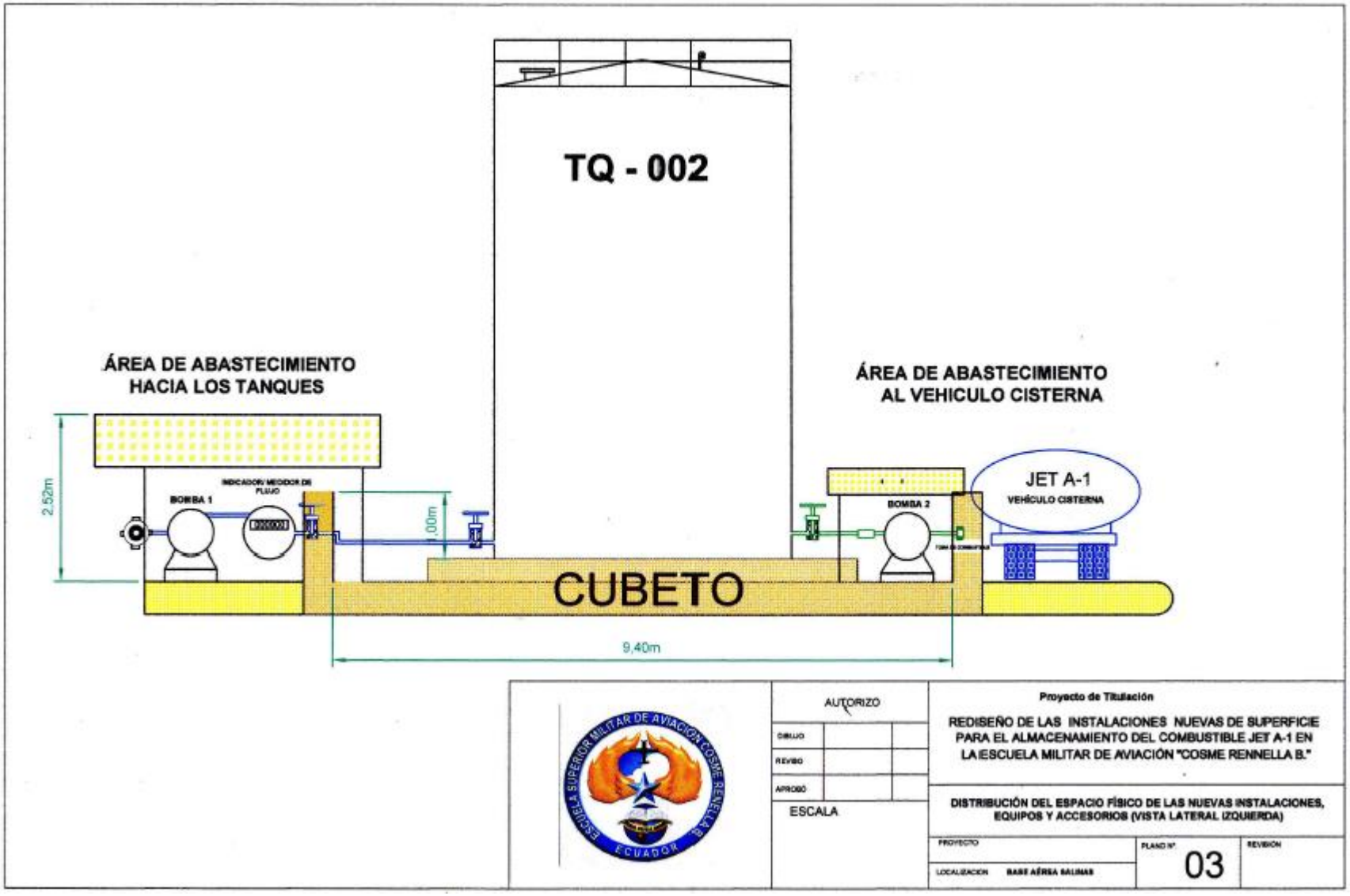

Fuente: Rediseño nuevas instalaciones de almacenamiento
Elaborado por: El autor

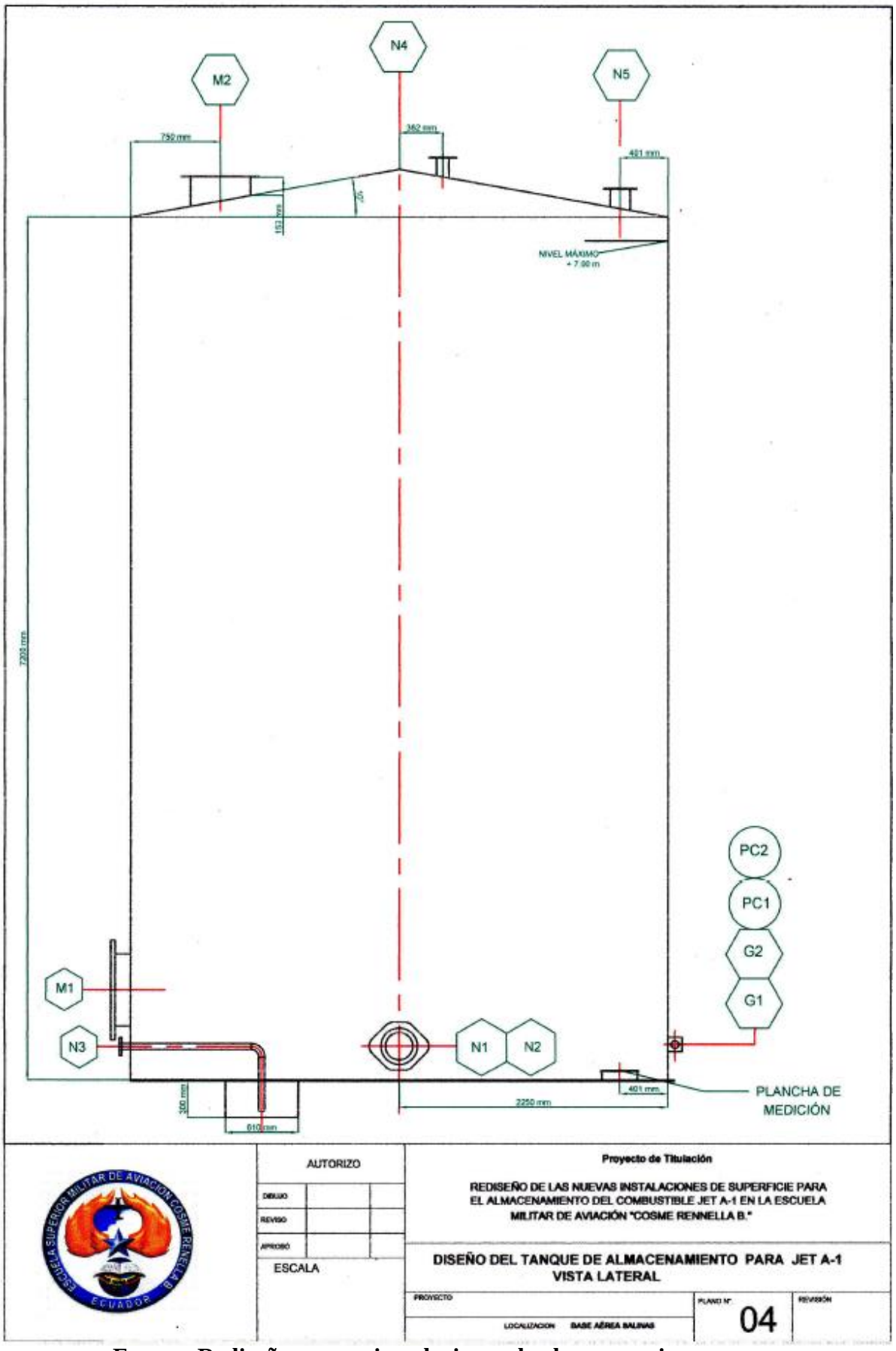

Fuente: Rediseño nuevas instalaciones de almacenamiento
Elaborado por: El autor

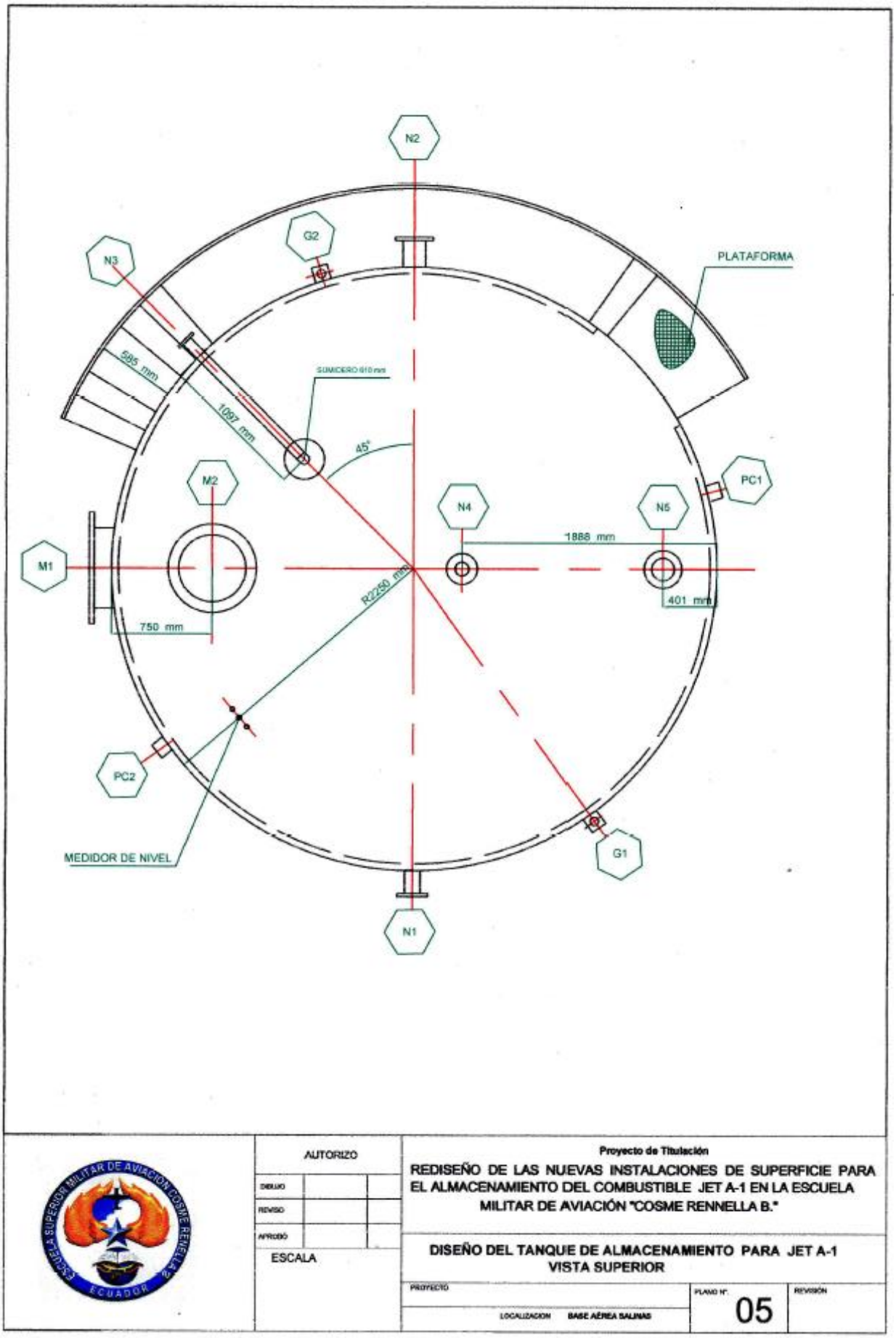

Fuente: Rediseño nuevas instalaciones de almacenamiento
Elaborado por: El autor

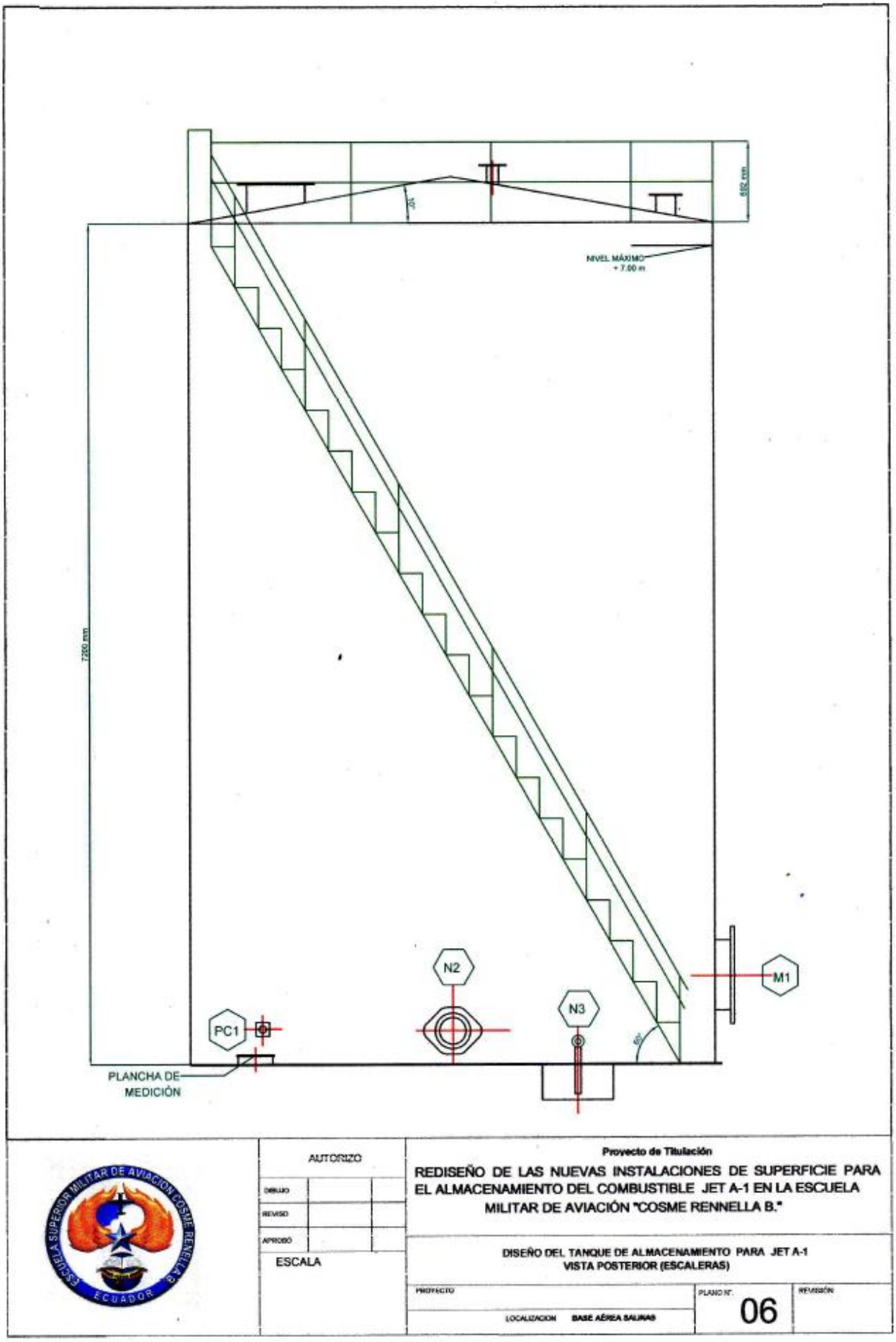

Fuente: Rediseño nuevas instalaciones de almacenamiento
Elaborado por: El autor

DESCRIPCIÓN DE ACCESORIOS DEL TANQUE

SIMBOLO	CANTIDAD	DESCRIPCION	TIPO
N1	1	CARGA 4"	150# WNRF
N2	1	DESCARGA 6"	150# WNRF
N3	1	DRENAJE 3"	150# WNRF
N4	1	VENTILACIÓN LIBRE	150# WNRF
N5	1	TAPA MEDICION	150# WNRF
M1	1	ENTRADA PARED	DISEÑO ESPECIAL
M2	1	ENTRADA TECHO	DISEÑO ESPECIAL
G1	1	CONEX. TIERRA	DISEÑO ESPECIAL

DATOS PARA EL DISEÑO DE LOS TANQUES

CODIGO APLICADO : API 650
GRAVEDAD ESPECIFICA : 0.840
VELOCIDAD DEL VIENTO : 20 Km/h
LIQUIDO A ALMACENAR : COMBUSTIBLE DE AVIACIÓN JET A-1
VOLUMEN A ALMACENAR : 60 500 GALONES
TEMPERATURA DE OPERACIÓN : 93°C
PRESIÓN DE DISEÑO : PRESIÓN ATMOSFÉRICA (14.7 PSI)

EQUIPOS Y ACCESORIOS DE CARGA DE DESCARGA DEL COMBUSTIBLE JET A-1

DESCRIPCIÓN	UNIDAD	CANTIDAD
VALVULA TIPO GLOBO 4"	UNIDAD	7
BOMBA CENTRIFUGA 2 HP	UNIDAD	2
MEDIDOR CONTOMETRO	UNIDAD	2
FILTRO SEPARADOR	UNIDAD	2

AUTORIZO

DIBUJO

REVISO

APROBÓ

ESCALA

Proyecto de Titulación

REDISEÑO DE LAS NUEVAS INSTALACIONES DE SUPERFICIE PARA EL ALMACENAMIENTO DEL COMBUSTIBLE JET A-1 EN LA ESCUELA MILITAR DE AVIACIÓN "COSME RENNELLA B."

DESCRIPCIÓN Y CARACTERÍSTICAS DEL TANQUE Y EQUIPOS DE CARGA Y DESCARGA

PROYECTO

LOCALIZACION BASE AÉREA SALINAS

PLANO N°. 07

REVISIÓN

Fuente: Rediseño nuevas instalaciones de almacenamiento
Elaborado por: El autor

CAPÍTULO IV

ANÁLISIS ECONÓMICO DEL REDISEÑO

En este proyecto, se realizó una estimación presupuestaria para el Rediseño de las Instalaciones de Superficie para el almacenamiento del Jet A-1, que comprende los costos más importantes en lo referente a la construcción de los tanques y los equipos principales que se instalará en este proyecto. El estudio financiero no será muy minucioso porque el presente proyecto de investigación se enfoca principalmente al rediseño estructural de los tanques de almacenamiento de combustible. La información que se presenta a continuación está estimada con base en la experiencia de constructores, casas comerciales, etc.

4.1. Costos de construcción

En este párrafo, se presenta los costos principales de construcción y montaje, que están divididos en costos directos e indirectos.

4.1.1. Costo directos

Dentro del análisis del costo de los materiales a utilizar, es primordial cuantificar el tipo de unidades, así como el peso en kilogramos del material a emplearse para el montaje de todas las partes y accesorios de los tanques de almacenamiento, detallando el número de planchas requeridas con sus respectivos pesos unitarios y totales. Asimismo, se determinará los costos totales de los requerimientos para la construcción de los tanques.

En las tablas de la N° 23 hasta la N° 40, se detallan todos los costos, directos como indirectos, para la construcción de uno de los tanques de almacenamiento de combustible, que serán parte del rediseño de las instalaciones de superficie para el almacenamiento de Jet A-1 en la ESMA

a) Obra mecánica

Tabla 24. Costos del fondo de los tanques (adquisición, montaje y soldadura)

Denominación	Volumen requerido m^3	Peso requerido kg	Precio USD/kg	Precio total USD
Material Espesor =10mm ASTM A36	0,159	1250	1,71	2137,50
Mano de obra				5000,00
			SUBTOTAL	7137,50
			IVA 12%	856,50
			TOTAL	**7994,00**

Elaborado por: El autor

Tabla 25. Costos del cuerpo de los tanques (adquisición, corte, biselado, montaje y soldadura)

Denominación	Volumen requerido m^3	Peso requerido Kg	Precio USD/kg	Precio total USD
Material primer anillo Espesor = 6mm ASTM A36	0,203	1600	1,71	2736,00
Material segundo anillo Espesor = 5mm ASTM A36	0,170	1335	1,71	2282,85
Material tercer anillo Espesor = 5mm ASTM A36	0,170	1335	1,71	2282,85
Mano de obra				17080,00
			SUBTOTAL	24381,70
			IVA 12%	2925,80
			TOTAL	**27307,50**

Elaborado por: El autor

Tabla 26. Costos del techo de los tanques (adquisición, corte, montaje y soldadura)

Denominación	Volumen requerido m^3	Peso requerido kg	Precio USD/kg	Precio total USD
Material Espesor =10mm ASTM A36	0,0795	630	1,71	1077,30
Mano de obra				2205,00
			SUBTOTAL	3282,30
			IVA 12%	393,88
			TOTAL	**3676,18**

Elaborado por: El autor

Tabla 27. Costos del ángulo de rigidez

Denominación	Volumen requerido m^3	Peso requerido kg	Precio USD/kg	Precio total USD
Angulo 50 x 50 x 5	0,00652	52	10,12	526,24
			SUBTOTAL	526,24
			IVA 12%	63,15
			TOTAL	**589,39**

Elaborado por: El autor

Tabla 28. Costos del paso de hombre del cuerpo

Especificación	Cantidad	Unidad	Precio Unitario USD	Precio total USD
Diámetro 600 mm ASTM A36	1	Unidad	1400,00	1400,00
			SUBTOTAL	1400,00
			IVA 12%	168,00
			TOTAL	**1568,00**

Elaborado por: El autor

Tabla 29. Costos del paso de hombre del techo

Especificación	Cantidad	Unidad	Precio Unitario USD	Precio total USD
Diámetro 600 mm ASTM A36	1	Unidad	1400,00	1400,00
			SUBTOTAL	1400,00
			IVA 12%	168,00
			TOTAL	**1568,00**

Elaborado por: El autor

Tabla 30. Costos de la boca de medición/aforo del techo

Especificación	Cantidad	Unidad	Precio Unitario USD	Precio total USD
ASTM A36 6 PLG.	1	Unidad	694,00	694,00
			SUBTOTAL	694,00
			IVA 12%	83,28
			TOTAL	**777,28**

Elaborado por: El autor

Tabla 31. Costos del venteo del techo

Especificación	Cantidad	Unidad	Precio Unitario USD	Precio total USD
ASTM A36 6 PLG.	1	Unidad	694,00	694,00
			SUBTOTAL	694,00
			IVA 12%	83,28
			TOTAL	**777,28**

Elaborado por: El autor

Tabla 32. Costos de boquilla de carga del tanque

Especificación	Cantidad	Unidad	Precio Unitario USD	Precio total USD
ASTM A36 4 PLG.	1	Unidad	390,00	390,00
			SUBTOTAL	390,00
			IVA 12%	46,80
			TOTAL	**426,80**

Elaborado por: El autor

Tabla 33. Costos de boquilla de descarga del tanque

Especificación	Cantidad	Unidad	Precio Unitario USD	Precio total USD
ASTM A36 6 PLG.	1	Unidad	450,00	450,00
			SUBTOTAL	450,00
			IVA 12%	54,00
			TOTAL	**504,00**

Elaborado por: El autor

Tabla 34. Costos de la escalera helicoidal del tanque

Denominación	Peso requerido kg	Precio USD/kg	Precio total USD
ASTM A36 (CON MONTAJE)	460	4,20	1932,00
		SUBTOTAL	1932,00
		IVA 12%	231,84
		TOTAL	**2163,84**

Elaborado por: El autor

Tabla 35. Costos de los pasamanos de seguridad del tanque

Denominación	Peso requerido kg	Precio USD/kg	Precio total USD
ASTM A36 (CON MONTAJE)	130	4,20	546,00
		SUBTOTAL	546,00
		IVA 12%	65,52
		TOTAL	**611,52**

Elaborado por: El autor

b) Otros costos

Tabla 36. Costos del sandblasting y pintura de las superficies del tanque

Denominación	Área m^2	Precio USD/ m^2	Precio total USD
TECHO Y PARED INTERIOR	140	35,00	4900,00
TECHO Y PARED EXTERIOR (ACCESORIOS, PASAMANO Y ESCALERA)	125	38,00	4750,00
		SUBTOTAL	9650,00
		IVA 12%	1158,00
		TOTAL	**10808,00**

Elaborado por: El autor

Tabla 37. Costos de válvulas y medidores

Denominación	CANTIDAD	PRECIO UNITARIO USD	Precio total USD
Medidor M7-C-1 CAUDAL 380 L/MIN PRESIÓN 10.5 BAR, FILTRO ELIMINADOR	1	11578,00	11578,00
VÁLVULA DE MARIPOSA (NFPA-407)	5	2000,00	10000,00
		SUBTOTAL	21578,00
		IVA 12%	2589,36
		TOTAL	**24167,36**

Elaborado por: El autor

Tabla 38. Costos de inspección de juntas soldadas y pruebas del tanque

Denominación	Cantidad	Precio USD	Precio total USD
Inspección radiográfica en juntas soldadas	14,3 m	50,00	715,00
Inspección tintas penetrantes soldadura piso cuerpo	20 m	15,00	300,00
Prueba caja de vacío soldadura piso techo	25 m	2,00	50,00
Pruebas de presión para refuerzo de bocas, pasos de hombre	7	80,00	560,00
Prueba hidrostática del tanque	115 m^3	3,00	345,00
Calificación de soldadores	1	1700,00	1700,00
Transporte de planchas y tuberías	1	2200,00	2200,00
		SUBTOTAL	5870,00
		IVA 12%	704,40
		TOTAL	**6574,40**

Elaborado por: El autor

Tabla 39. Costo de calibración de tanques

Denominación	Cantidad	Precio USD	Precio total USD
Calibración de tanques (tablas de aforo)	2	4200,00	8400,00
		SUBTOTAL	8400,00
		IVA 12%	1008,00
		TOTAL	**9408,00**

Elaborado por: El autor

Tabla 40. Costos documentación

Denominación	Unidad	Precio USD	Precio total USD
Memoria técnica descriptiva Manuales de operación y mantenimiento Manual del fabricante Certificados de calidad del material Planos	1	3500,00	3500,00
		SUBTOTAL	3500,00
		IVA 12%	420,00
		TOTAL	**3920,00**

Elaborado por: El autor

4.1.2. Costos indirectos

Tabla 41. Desglose de costos indirectos

Denominación	Unidad	Precio total USD
Impuestos 2%	Global	1956,63
Gastos financieros 3%	Global	2934,95
Gastos administrativos y dirección del proyecto 6,5%	Global	6359,06
Imprevistos del proyecto 4%	Global	3913,27
Utilidad 15%	Global	14674,76
	SUBTOTAL	29838,67
	IVA 12%	3580,64
	TOTAL	**33419,31**

Elaborado por: El autor

4.2. Presupuesto general para la fabricación del tanque y equipos.

Una vez revisados los costos aproximados de los materiales, mano de obra y equipos para la realización del proyecto, a continuación, se presenta un resumen del costo por cada tanque.

En la tabla 41 se muestra el presupuesto general para la construcción de cada uno de los tanques, que incluyen todos los costos incluyendo impuestos y otros gastos por imprevistos.

Tabla 42. Presupuesto general para la fabricación de cada tanque

Ítem	Denominación	Unidad	Precio total USD
1	**Ingeniería básica y de detalle**	Global	6000,00
2	**Obra mecánica**	Global	42833,74
3	**Válvulas y medidores**	Global	21578,00
4	**Preparación de superficie y pintura**	Global	9650,00
5	**Inspecciones y pruebas, movilización**	Global	5870,00
6	**Calibración de tanques**	Global	8400,00
7	**Documentación**	Global	3500,00
TOTAL GENERAL SIN IVA (COSTOS DIRECTOS): A			97831,74
TOTAL GENERAL SIN IVA (COSTOS INDIRECTOS): B			33419,31
TOTAL GENERAL SIN IVA : A + B			**131251,05**

Elaborado por: El autor

El presupuesto para la construcción de cada tanque con sus accesorios es de $131251,05 (ciento treinta y un mil doscientos cincuenta y uno con 05/100 dólares).

Este proyecto requiere de dos tanques para el almacenamiento del Jet A-1 , por lo que el costo total referencial sería de $**262502,10 (doscientos sesenta y dos mil quinientos dos con 10/100 dólares),** que serán propuestos a los Ministerios de Economía y de Defensa Nacional para que sea aprobado y aplicado en la Escuela Militar de Aviación “Cosme Rennella B.”.

CONCLUSIONES

- Los tanques que actualmente sirven para el almacenamiento del combustible de aviación Jet A-1, no están diseñados y construidos bajo ningún tipo de norma nacional o Internacional que garanticen la calidad y seguridad para el desarrollo de las operaciones aéreas en la ESMA.

- Con el rediseño de las instalaciones de superficie para el almacenamiento de Jet A-1, aplicando la Norma API 650 "Tanques soldados para el almacenamiento de crudos y derivados", que es usado en los diseños de los tanques de almacenamiento en la mayoría de los países del mundo, se tendrá una mayor capacidad operativa de hasta 55.000 galones, permitiendo almacenar una mayor cantidad de producto para que las operaciones aéreas se desarrollen normalmente.

- El rediseño de las instalaciones de superficie presenta todos los accesorios de carga y descarga del combustible, pasos de hombre y demás accesorios, un cubeto en caso de derrames y un sistema contraincendios tanto fijo como portátil basados en las NFPA, permitiendo minimizar los riesgos de posibles contaminación, derrames o incendio durante todas las operaciones de almacenamiento, despacho y recepción del producto.

RECOMENDACIONES

- Para la mejor aplicación de normas en el diseño de instalaciones de superficie, se debe instruir a los estudiantes de Ingeniería en Petróleo en el empleo de la Norma API 650 "Tanques soldados para el almacenamiento de crudos y derivados".

- Rediseñar y construir los tanques de almacenamiento basados en la Norma API 650 en todas las bases militares y aeropuertos del país, que utilicen los diferentes tipos de combustibles usados en aeronaves.

- Adaptar los dispositivos de carga y descarga, a los tanques actuales, para reducir posibles riesgos de contaminación del combustible, y adecuar el sistema contraincendios de acuerdo a las norma NFPA, mientras el proyecto sea puesto en marcha.

- Realizar un requerimiento técnico para que se ejecute una inspección de Ensayos no Destructivos, con la finalidad de determinar y proyectar el límite de vida útil de la taquería actual, para que en lo posterior este proyecto de Rediseño sea i a través de SENPLADES, y sea aprobado por el Ministerio de Economía, en beneficio del Estado ecuatoriano.

- El proyecto se debe viabilizar de manera oportuna ya que los tanques que, actualmente, se está usando presentan defectos y pérdidas de espesores de los cuerpos, y los equipos de carga y descarga no garantizan que el combustible sea almacenado eficientemente, no logrando que se conserven las propiedades físico-químicas y de calidad requeridas para el uso en las aeronaves de la ESMA.

BIBLIOGRAFÍA

American Petroleum Institute, A. (2013). Norma API 650 (2013 ed.). Washington DC: American Petroleum Institute.

ANCAP. (2010). EL MUNDO DEL PETRÓLEO.

Cabezas Félix, R. I. (2011). Diseño de un tanque de 3000 bbl. para almacenar crudo. Quito: Universidad Politécnica Salesiana.

Cepeda, A. (2000). Seminario taller manejo del Jet A-1. PETROCAPACITACIÓN. Quito.

Ecopetrol. (2013). Manual de medición de hidrocarburos, calibracion de tanques. Colombia: Ecopetrol.

INEN. (2006). Especificaciones combustible de turbina Jet-A1. Quito: INEN.

Institute, A. P. (1998). Tanques de baja presión y ventilación atmosférica, API 2000. Washington DC.: American Petroleum Institute.

ANEXOS

ANEXO “A”

Diagrama de flujo planta destiladora Parsons

Diagrama de flujo planta destiladora Cautivo

Diagrama de flujo planta destiladora Universal

ANEXO “B”

Certificado de calidad “OTILATAM de Panamá”

Informe de resultados EP PETROECUADOR para un “Jet A-1 Importado”

ANEXO “C”

Consumo de combustible Jet A-1: Julio 2014

Consumo de combustible Jet A-1: Agosto 2014

Consumo de combustible Jet A-1: Noviembre 2014

ANEXO “D”

Factura de recepcion de Jet A-1 en la ESMA

Guía de remision

ANEXO “E”

Tablas de calibracion de tanques actuales en la ESMA

ANEXO “F”

Norma API 650 - Figuras 4.1a y 4.1b

Norma API 650 - Tabla 4.4a y 4.4b

Norma API 650 - Tabla 4.2

Norma API 650 - Tabla 4.5a y 4.5b

Norma API 650 - Tabla 5.6a y 5.6b

Norma API 650 - Tabla 5.7a y 5.7b

Norma API 650 - Tabla 5.8a

ANEXO “G”

Norma API 650 – Anexo “B”

Norma API 650 – Anexo “N”

Hoja de información del tanque según Anexo L Norma API 650

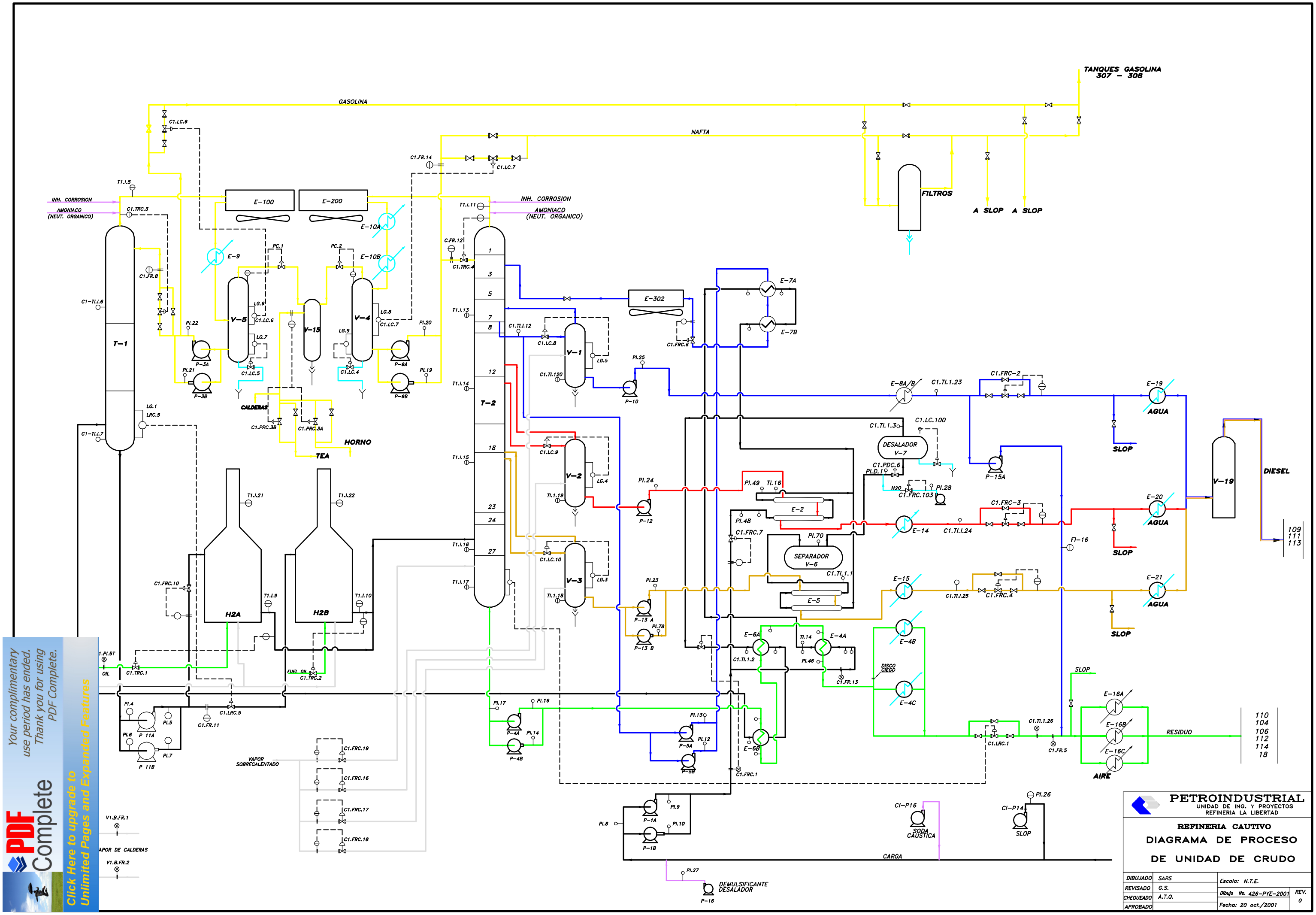

Your complimentary use period has ended. Thank you for using PDF Complete.
Click Here to upgrade to Unlimited Pages and Expanded Features

PLANTA DESTILADORA UNIVERSAL

DIAGRAMA DE FLUJO

AGUA ENFRIAMIENTO — C.PI.108

Y.TIC.2 — BLOW-DOWN

AIRE INSTRUMENTOS — C.PI.112

C.PI.4T, C.PI.6T, CP1 A, CP1 B., DEMULSIFICANTE DESALADOR, CRUDO DE ALMACENAJE

C.TRC.10, C.TI.27, CE.1, INHIBIDOR CORROSION, NEUTRALIZANTE ORGANICO, AMONIACO GAS

CE-7 A/B AGUA SALADA

TEA, C.PRC.36A, C.PRC.36B, C.PRC.36, COMPRESOR, C.FI.22

REFLUJO, REFLUJO LATERAL

C.LC.38, GASOLINA CV-3, C.TI.23, CP5A, CP5B, C.LC.40, AGUA

C.TI.30, C.V.1 FRACCIONADOR, PRIMER DESPOJADOR CV-2, C.LC.31

C.FR.44, C.PI.16T, C.PI.17T, C.TRC.40 FO, GASOLINA ALMACENAM.

C.FRC.25 FO, CE-8 B, C.TI.28, C.FRC.27, DESTILADO ALMACENAM.

C.PI.15T, CE-2 A/B, CP.4, CE-8A

C.TI.21, ESTE, OESTE, C.TI.14, C.TI.15, C.TI.16, C.TI.17, TH-2, C.TI.18, C.TI.19

F3, C.PI.30T, C.PI.19, C.TRC.8, YP 2 A, C.PI.31T, YP 2 B, C.PRC.16 FC

C.TRC.8, C.TI.20

C.FRC.18 FO, C.FRC.19 FO

C.PI.13T, CP3A, C.PI.14T, CP3B, CE-3A, CE-3B, CE-11A/B

C.TI.57, SEGUNDO DESPOJADOR CV-4, C.LC.58, C.LC.13

Na(OH), CE- 4C, C.TI.26

DESALADOR CV.10, C.LC.10, C.PID.6 FO, C.FRC.11, C.FI.15, AGUA, AGUA

C.PRC.6 FO, CE.10 B/C., C.TI.22, C.FRC.55 FC, DIESEL

CP-7A, C.PI.18T, C.PI.42T, CP-7B, C.TI.25, C.TI.24, C.FR.20, RESIDUO

CE.10A, CE.9, C.L.C.13 FC, CE.9 B/C/D

C.PI.7T, CP-2 A, C.PI.10T, CP-2 B, C.PI.25T, CP-2 CT, CE.4 A/B, VAPOR

PARSONS, Y-FI.2, C.PI.109, C.PI.5, C.FI.5, UNIVERSAL, C.FRC.12 FC, C.FRC.30 FC, C.FRC.57 FC

INST. LOCAL

TRANS. LOCAL

INST. PANEL

PETROINDUSTRIAL	UNIDAD DE ING. Y PROYECTOS REFINERIA LA LIBERTAD		
PLANTA UNIVERSAL			
DIAGRAMA DE FLUJO CON INSTRUMENTACION			
DIBUJADO	S.A.R.S.	ESCALA:	N.T.E
REVISADO	V.Z.C. / A.T.Q.	DIBUJO No.415-PYE-2001	REV. 2
CHEQUEADO	C.A.P.	FECHA:	20 Junio\2001
APROBADO	F.U.P.		

Your complimentary use period has ended. Thank you for using PDF Complete.
PDF Complete
Click Here to upgrade to Unlimited Pages and Expanded Features

PLANTA DESTILADORA PARSONS

DIAGRAMA DE FLUJO

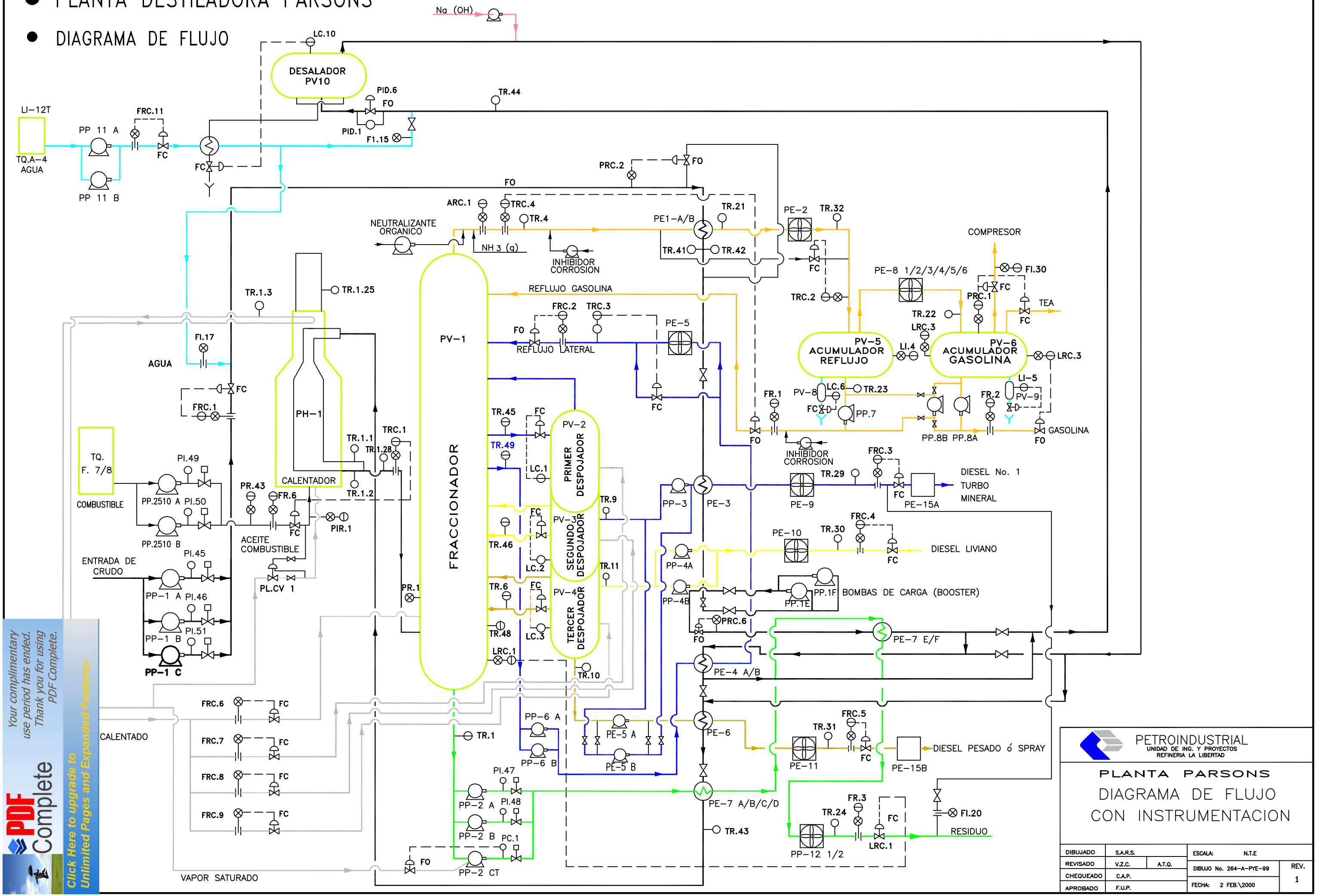

Your complimentary use period has ended. Thank you for using PDF Complete.
PDF Complete
Click Here to upgrade to Unlimited Pages and Expanded Features

PETROINDUSTRIAL
UNIDAD DE ING. Y PROYECTOS
REFINERIA LA LIBERTAD

PLANTA PARSONS

DIAGRAMA DE FLUJO CON INSTRUMENTACION

DIBUJADO	S.A.R.S.		ESCALA: N.T.E	
REVISADO	V.Z.C.	A.T.Q.	DIBUJO No. 264-A-PYE-99	REV. 1
CHEQUEADO	C.A.P.		FECHA: 2 FEB.\2000	
APROBADO	F.U.P.			

OTILATAM DE PANAMA, S.A.

OTILATAM DE PANAMA

ISO/IEC 17025 ACCREDITATION No LE- 017

LE No 017

CERTIFICATE OF QUALITY

Client(s):	***Noble Americas Corp.***	***Sample Identification***	***MT CHALLENGE PACIFIC (4W)***
Address	*Noble Americas Corp., Four Stamford Plaza 7th floor 107 Elm Street, Stamford, CT06902. Tel: 1-203-363-7566. email:Jdrabcznski@nobleamericas.com*	***Product***	***JET A-1***
Date of Reception Sample	September 11, 2014	***Representative Sample***	On Board Composite
Date of Analysis	September 11, 2014	***Insp. OTI***	PT-14-0569
Drawn By	**OTILATAM DE PANAMA,S.A., SECCION DE OPERACIONES**	***Lab OTI***	LP-565-14

TESTS PERFORMED

Description of Test	Source Sample	Units	Method	Results	JET-A1 Minimum	JET-A1 Maximum
Appearance	composite		visual	C & B	C & B	
Flash Point, TAG Closed Cup		°C	ASTM D 56	46.0	40.0	-----
Viscosity @-20 °C		cSt	ASTM D 445	1.549	-----	8.00
Saybolt Color			ASTM D 156	+26	+25	
API @ 60 °F		API	ASTM D 4052	47.3	37.0	51.0
Density @ 15.6 °C		Kg/m3	ASTM D 4052	791.0	775.0	840.0
Sulfur		% peso	ASTM D 4294	0.003	-----	0.30
Mercaptan Sulfur		% peso	ASTM D 3227	0.0002	-----	0.003
Doctor Test			ASTM D 4952	Negative	-----	Negativo
Aromatics		% vol	ASTM D 1319	15.1	-----	20.0
Olefins		% vol	ASTM D 1319	1.7	-----	4.0
Copper Corrosion at 100°C (212°F) for 2 hrs			ASTM D 130	1a	-----	1
Gum, Existent (Unwashed)		mg/ 100 ml	ASTM D 381	1.0	-----	5
Distillation PI		° C	ASTM D 86	145 (293)	Reportar	
Distillation 10 %		° C	ASTM D 86	173 (343)	-----	205 (400)
Distillation 20 %		° C	ASTM D 86	175 (347)	Reportar	
Distillation 50 %		° C	ASTM D 86	187 (369)	Reportar	
Distillation 90 %		° C	ASTM D 86	213 (415)	Reportar	
Distillation FBP		° C	ASTM D 86	235 (455)	-----	290
Residue		%vol.	ASTM D 86	1.1	-----	1.5
Loss		%vol.	ASTM D 86	0.7	-----	1.5
Acidity, Total		mg KOH/g	ASTM D 3242	0.004	-----	0.090
Smoke Point		mm	ASTM D 1322	23	22	-----
Water Reaction						
Interface Rating			ASTM D 1094	1b	-----	1b
Degree of Seperation			ASTM D 1094	1	-----	2
Volume Change		ml	ASTM D 1094	0.5	-----	-----
Naphthalenes		%vol.	ASTM D 1840	0.28	-----	2.0
Particulate Contaminantes		mg/L	ASTM D 5452	0.04	-----	1.0
Time to filter 1 Gallon		Min	ASTM D 5452	10	-----	15.0
JFTOT-Pressure Drop		mmHg	ASTM D 3241	0	-----	25.0
JFTOT-Heater Tube Deposit Rating		codigo N°	ASTM D 3241	1	-----	<3.0
Microseparometer Index (MSEP)			ASTM D 3948	99	90	-----
Freezing Point, TAG Closed Cup		°C (°F)	ASTM D 2386	-57 (-70.6)	-----	-40 (-40)
Heat of Combustion, Net		MJ/Kg	ASTM D 3338	43.3	42.8	-----
Electrical Conductivity		pS/m	ASTM D 2624	311	50	450

Note:

The results of the test indicated on this report are only valid for the indicated sample.

This Report may not be reproduced in part or total without the written permission of OTILATAM DE PANAMA,S.A

Luis Chong

For OTILATAM DE PANAMA,S.A.

Williamson Place, Bldg No. 0752 A, La Boca, Balboa, Panama, Rep. de Panama Tel: (507) 314-1260 Fax: (507) 314-126
www.otilatam.com

EP PETROECUADOR

COORDINACION GENERAL DE CONTROL DE CALIDAD
REFINERIA LA LIBERTAD

INFORME DE RESULTADOS

Laboratorio de ensayo acreditado por el OAE, con acreditación No. OAE LE C 11-008

JET A-1 IMPORTADO

DATOS DE LA MUESTRA			
Tipo de muestra:	Jet A-1	**Cantidad**	2 Galones
Identificación:	CCA-HID-JP1-IMP-004	**Hora de muestreo:**	16H00
Lugar de Toma:	BT. CHALLENGER PACIFIC	**Fecha de Recepción de Muestras**	13-sep-14
Fecha de muestreo:	13-sep-14		

DATOS DEL ANALISIS			
Temperatura:	21 ºC	**Humedad:60%**	56%
Fecha Inicio del Análisis:	13-sep-14	**Fecha de Emisión Informe:**	25-feb-00
Fecha Fin del Análisis:	13-sep-14		

PARAMETROS	UNIDAD	METODO ASTM	RESULTADO
Color Saybolt *		D-156	30
Gravedad Específica, 60/60 °F *	-	D-1298	0,7909
Gravedad API, 60/60 °F *	°API	D-1298	47,4
Acidez Total, Muestra *	mg KOH/gr.	D-974	0,04
Aromáticos *	%V	D-1319	14,6
Olefina *	%V	D-1319	1,3
Azufre Mercaptano, *	%V	D-3227	0,0003
Azufre Total	ppm	D-4294	3
Corrosión Lámina de Cobre *		D-130	1a
Destilación:		D-86	
10%, *	°C		169
20%, *	°C		173
50%, *	°C		185
90%, *	°C		210
PFE, *	°C		238
Residuo %V *	%V		1,5
Pérdida %V *	%V		0,0
Punto de Inflamación, °C *	°C	D- 56	45
Punto de Congelación, °C *	°C	D-7153	-62,9
Punto de Humo, *	mm	D-1322	22
Contenido Naftaleno, *	%v	D-1840	0,13
Viscosidad Cinemática a - 20°C,	mm²/s	D-445	2,528
Wsim *		D-3948	90
Gomas Existentes *	mg/100 ml	D-381	0,5
-Est. Termica: Caida de presión, en SH *	Kpa	D-3241	1,0
- Est. Termica: Depósito Tubo precalentamiento *		D-3241	1
Reacción Agua: Clasificación Interfase *		D-1094	1
Reacción Agua: Clasificación Separación *		D-1094	1
Agua en Emulsión, *	ppm	D-3240	< 5
Calor Neta Combus. *	MJ/Kg	D-3338	43,4
Contenido partícula, *	mg/L	D-2276	0,2
Tiempo Filtración *	min.	D-2276	15

OBSERVACIONES GENERALES

PARÁMETROS DENTRO DE ESPECIFICACION.

NOMBRE: ING. EDUARDO SANDOVAL
COORDINADOR GENERAL DE CONTROL DE CALIDAD

ARCH-P

- Los resultados emitidos en este informe, corresponden únicamente a la(s) muestra(s) sometidas al ensayo.
- No se debe reproducir el informe, excepto en su totalidad, sin la aprobación escrita del laboratorio

"Los ensayos marcados con (*) NO están incluidos en el alcance de la acreditacion del OAE"

EP PETROECUADOR

MATRIZ
Alpallana E8-86 y Av. 6 de Diciembre
QUITO - ECUADOR
Telfs: 2994-200
Fax: 2543 432 - 2500 934

EMPRESA PÚBLICA DE HIDROCARBUROS
DEL ECUADOR EP PETROECUADOR
RUC: 1768153530001
CONTRIB. ESPECIAL RESOL. 2572 2010-04-06

FACTURA: 010-002-0016780
COD. CONTROL: 10-10403298

AUTORIZACION SRI No. 1114559745
RIGE DESDE: 2014-03-27
HASTA: 2015-03-27

DATOS SISTEMA: 2014-09-19 08:46:28
FAC-EMI-P

ESTABLECIMIENTO: KM 14 1/2 VIA DAULE y S/N
LUGAR Y F. DE EMISION: 10-PASCUALES 2014-09-19
FECHA DE VENCIMIENTO: 2014-12-30
SR. (ES): 02040079-CAJA CENTRAL FAE
CAJA CENTRAL FAE
R.U.C.: 1768017510001
DIRECCION: LA EXPOSICION 208 y AV. MALDONADO
DEPOSITO DE ENTREGA: 13 - TERMINAL PASCUALES

PRODUCTO	UNIDAD	CANTIDAD	PREC.UNIT.	TOTAL
JET A-1 TPCO NACIONAL	GALS	9,898.000	2.792835	27,643.48
SUBTOTAL				27,643.48
12% IVA PRODUCTO				3,317.22
TREINTA MIL NOVECIENTOS SESENTA CON 70/100 DOLARES				$ 30,960.70

Si el cliente no retira el producto en el lapso de 30 días, el sistema procederá a anular la factura
FECHA LÍMITE DE DESPACHO A LA FECHA DE VENCIMIENTO
OBSERVACIONES: FACTURACION MEDIANTE CONVENIO MIDENA OFICIO N° FA-EV-F2-2014-545-O

EMPRESA PÚBLICA DE HIDROCARBUROS DEL ECUADOR EP PETROECUADOR
GUAYAQUIL

FIRMA DE RESPONSABILIDAD
COMFJAI

Original: **CLIENTE**

CLIENTE
C.C 0910068131

3' lg 14 16 371 0072788-89-90 ③

EP PETROECUADOR
EMPRESA PUBLICA DE HIDROCARBUROS
DEL ECUADOR EP PETROECUADOR
MATRIZ: ALPALLANA E8-86 y AV. 6 DE DICIEMBRE
TELF: 2563 060 / 2563 607
QUITO - ECUADOR

GUIA DE REMISION

Numero Guia: 010-001-000932634
Cd. Control: 13774011
Nota pedido: 10403298 010-002-000016780 2014/09/19

1768153530001

RDSWOPA PL02 2014/09/23 13:58:38
Fin traslado: 2014/09/24

24/SEP/2014
CBOS. SARCEMA D.

Inicio traslado.: 2014/09/23
Comercializadora: 01 EP PETROECUADOR
Identif. Cliente: 02040079 CAJA CENTRAL FAE
RUC del Cliente.: 1768017510001
Ubicacion.....: 170107 GONZALEZ SUAREZ
Direccion Local.: LA EXPOSICION 208 AV. MALDONAD
Iden. Transporte: 10-1136-05 A/T
Ident. Conductor: YANEZ BUSTILLOS CARLOS HIPOLIT
Cedula Conductor: 0501602668

Terminal: 13 PASCUALES
Producto: 10 JET A-1 TPCO NACION

Placa: UEA0704
No. Autorizacion: 1114559745
Rige Desde: 2014/03/27 Hasta: 2015/03/27
Motivo traslado: VENTA

COMPARTIMIENTOS

1	2	3	4	5	6
4.949	4.949				

Formulario: 03791647

VOLUMEN DESPACHADO: 9.898

CLIENTE

3791647

CONTRIBUYENTE ESPECIAL RESOLUCION 2572 DEL 6 DE ABRIL DE 2010

LECTURA DEL MEDIDOR

IMP. INSTITUTO GEOGRAFICO MILITAR TELF. 3975100 RUC No. 1768007200001 AUTORIZACION No. 1895

RECIBI CONFORME

FIRMA DESPACHADOR

ENTREGUE CONFORME

ESCUELA SUPERIOR DE AVIACION COSME RENNELLA B

ESCUADRON ABASTTOS ESMA | **PRODUCTO: COMBUSTIBLE DE AVIACION** | **MES : JULIO-2014** | **SECCION COMBUST. Y LUBRIC. AEREOS**

ORD.	AERONAVES ESMA	M 1	M 2	J 3	V 4	S 5	D 6	L 7	M 8	M 9	J 10	V 11	S 12	D 13	L 14	M 15	M 16	J 17	V 18	S 19	D 20	L 21	M 22	M 23	J 24	V 25	S 26	D 27	L 28	M 29	M 30	J 31	TOTAL
	TURBO JET A-1 FAE																																
1	AVION T34C-1 NRO 015																																0
2	AVION T34C-1 NRO 016																																0
3	AVION T34C-1 NRO 018																																0
4	AVION T34C-1 NRO 019																																0
5	AVION T34C-1 NRO 024	36	24						40	214	326	156	238		14	233	330	230	192			113	47											2193
6	AVION T34C-1 NRO 026	40	42		195			239	281	232	293	130	177		136	149	203	244	231			209	341	330			135		196	284	100	398	4585
7	AVION T 34C-1 NRO 034	28	40		155			179	190	197	317	236			195	155	142	290	192			177		332	396	155			340	226	150	243	4335
	OTROS REPARTOS																																
1	SABRELINER FAE FAE 043		404						605			160																					1169
2	SABRELINER FAE FAE 047																																0
3	AVION BOEING FAE 620																																0
4	AVION C-130 FAE 893																																0
5	AVION BOEING FAE 630																																0
6	HELICOPTERO FAE 401																	37															37
7	HELICOPTERO FAE 603																								100								100
8	HELICOPTERO EJERCITO IGM-628																																0
9	HELICOPTERO EJERCITO E-488																																0
10	DRENAJE COMBUSTIBLE																															24	24
	TOTAL	104	510	0	350	0	0	418	1116	643	936	682	415	0	345	537	675	801	615	0	0	499	388	662	496	155	135	0	536	510	250	665	**12443**
	AVGAS 100/130 ESMA																																
1	AVIONETA DIAMOND 1060									8	15				16			7							8						20		74
2	AVIONETA DIAMOND 1061									28			23		16	24	8		16			16				24			8				163
3	AVIONETA DIAMOND 1062																																0
4	AVIONETA DIAMOND 1063	22		24	16			23	21	16	19				11	22	22		15										42	16	16	16	301
5	AVIONETA DIAMOND 1064		8		16			8	8			8	8				22	12	23			15		16									144
6	AVIONETA DIAMOND 1065		8		4										16		8	9					15	8	16				26	16	22	22	170
7	AVIONETA DIAMOND 1066	16	8		8					12												10	15	15	8						16	24	132
8	AVIONETA DIAMOND 1067																																0
9	AVIONETA DIAMOND 1068																																0
10	AVIONETA DIAMOND 1069																																0
11	AVIONETA DIAMOND 1070	16	8		16						19		23				16	18	15				15			16							162
12	AVIONETA DIAMOND 1071	24	8	8					15			25			23	24	24	8				17	8							16	14	14	228
13	DRENAJE COMBUSTIBLE																															24	24
	OTROS REPARTOS																																
1	AVIONETA FAE 524																																0
2	AVIONETA CESSNA HCJTV (ANTI)																																0
	TOTAL	78	40	32	60	0	0	31	44	64	53	33	54	0	82	70	100	54	69	0	0	58	53	39	32	40	0	0	76	48	88	100	**1398**
	JET-A-1 NAVAL																																
1	HELICOPTERO NAVAL																											110					110
2	AVIACION NAVAL AVINAV																																0
	TOTAL	0	0	0	0	0	0	0	0	0	0	0	0	0	0	0	0	0	0	0	0	0	0	0	0	0	0	110	0	0	0	0	**110**

ELABORADO POR

JOSE MORENO A.
SGOP. TEC.AVC.
ENGDO. COMBUSTIBLES ESMA

ESCUELA SUPERIOR MILITAR DE AVIACION COSME RENNELLA B
ESCUADRON DE ABASTECIMIENTOS

REVISADO POR

WILSON ROBALINO P.
SUBS. TÉC. AVC.
SUPERVISOR ABASTTOS. ESMA

VISTO BUENO

FAUSTO CAÑAR L.
MAYO. TEC. AVC.
JEFE ESCD. ABASTECIMIENTOS ESMA

ESCUELA SUPERIOR DE AVIACION COSME RENNELLA B

ESCUADRON ABASTTOS ESMA | **PRODUCTO: COMBUSTIBLE DE AVIACION** | **MES : AGOSTO-2014** | **SECCION C0MBUST. Y LUBRIC. AEREOS**

ORD.	AERONAVES ESMA	V 1	S 2	D 3	L 4	M 5	M 6	J 7	V 8	S 9	D 10	L 11	M 12	M 13	J 14	V 15	S 16	D 17	L 18	M 19	M 20	J 21	V 22	S 23	D 24	L 25	M 26	M 27	J 28	V 29	S 30	D 31	TOTAL
	TURBO JET A-1 FAE																																
1	AVION T34C-1 NRO 015																																0
2	AVION T34C-1 NRO 016																																0
3	AVION T34C-1 NRO 018																																0
4	AVION T34C-1 NRO 022																												30	56			86
5	AVION T34C-1 NRO 024																						40			282	217	177	214	57			987
6	AVION T34C-1 NRO 026	233			298	210	246	190	187			290	173	148		136			230		95	211	116			217	217	219	140				3556
7	AVION T 34C-1 NRO 034	48			384	175	191	220	143			273	264	100		101			104		55	151											2209
	OTROS REPARTOS																																
1	SABRELINER FAE FAE 043																																0
2	SABRELINER FAE FAE 047																																0
3	AVION BOEING FAE 620																																0
4	AVION C-130 FAE 893																																0
5	AVION BOEING FAE 630								1068																								1068
6	HELICOPTERO FAE 401																																0
7	HELICOPTERO FAE 603																																0
8	DRENAJE COMBUSTIBLE																															23	23
	TOTAL	281	0	0	682	385	437	410	1398	0	0	563	437	248	0	237	0	0	334	0	150	362	156	0	0	499	434	396	384	113	0	23	**7929**
	AVGAS 100/130 ESMA																																
1	AVIONETA DIAMOND 1060						24	23					17	21	13	7			15				22			19	22						183
2	AVIONETA DIAMOND 1061	24			20	16	15	19				14	7							15	6	8											144
3	AVIONETA DIAMOND 1062							15																									15
4	AVIONETA DIAMOND 1063				8																												8
5	AVIONETA DIAMOND 1064						36	8					30			7				13								18	15	14			141
6	AVIONETA DIAMOND 1065					44	8					13		15	7					16	13						23	21					160
7	AVIONETA DIAMOND 1066	8				16	15	20	7				24			16				11		3	8			16	22						166
8	AVIONETA DIAMOND 1067							16														7											23
9	AVIONETA DIAMOND 1068							16																									16
10	AVIONETA DIAMOND 1070	16			14			6				15			7					12	24								8				102
11	AVIONETA DIAMOND 1071	8				29						32							15	6			8				19		13	7			137
12	DRENAJE COMBUSTIBLE																															22	22
	OTROS REPARTOS																																
1	AVIONETA FAE 524																																0
	TOTAL	56	0	0	42	105	98	123	7	0	0	74	78	36	27	30	0	0	30	73	43	18	38	0	0	35	86	39	36	21	0	22	**1117**
	JET-A-1 NAVAL																																
1	HELICOPTERO NAVAL																										260	435	130				825
	TOTAL	0	0	0	0	0	0	0	0	0	0	0	0	0	0	0	0	0	0	0	0	0	0	0	0	0	260	435	130	0	0	0	**825**

ELABORADO POR

JOSE MORENO A.
SGOP. TEC.AVC.
ENGDO. COMBUSTIBLES ESMA

REVISADO POR

WILSON ROBALINO P.
SUBS. TÉC. AVC.
SUPERVISOR ABASTTOS. ESMA

VISTO BUENO

FAUSTO CAIZALUISA
MAYO. TÉC. AVC.
CMDTE. ESCD. ABASTECIMIENTOS ESMA

ESCUELA SUPERIOR DE AVIACION COSME RENNELLA B

ESCUADRON ABASTTOS ESMA | **PRODUCTO: COMBUSTIBLE DE AVIACION** | **MES : NOVIEMBRE-2014** | **SECCION COMBUST. Y LUBRIC. AEREOS**

ORD.	AERONAVES ESMA	S 1	D 2	L 3	M 4	M 5	J 6	V 7	S 8	D 9	L 10	M 11	M 12	J 13	V 14	S 15	D 16	L 17	M 18	M 19	J 20	V 21	S 22	D 23	L 24	M 25	M 26	J 27	V 28	S 29	D 30		TOTAL
	TURBO JET A-1 FAE																																
1	AVION T34C-1 NRO 015																																0
2	AVION T34C-1 NRO 016																																0
3	AVION T34C-1 NRO 018				60	152	160	38			136	130	100	78	181			87	121	86	83	96			146	203	213	151	150				2371
4	AVION T34C-1 NRO 022																																0
5	AVION T34C-1 NRO 024				112	200	189	68			165	108	130	238				136	136	228	90				142	256	184	119	135				2636
6	AVION T34C-1 NRO 026				123	211	181	67			124	89	117	220	197			65	68		139	112			144	122	177	83	134				2373
7	AVION T 34C-1 NRO 034																																0
	OTROS REPARTOS																																
1	SABRELINER FAE FAE 043							456																									456
2	SABRELINER FAE FAE 047																																0
3	AVION BOEING FAE 620																												3019		2356		5375
4	AVION C-130 FAE 893			1842																													1842
5	AVION BOEING FAE 630			2548				1010														1642		1654									6854
6	HELICOPTERO FAE 607																											270					270
7	AVION CASA FAE 1030																		434														434
8	AVION CASA FAE 1031																		812	180													992
9	HELICOPTERO FAE 415																																0
10	AVION SUPERTUCANO 1025																																0
11	AVION SUPERTUCANO 1026																																0
12	DRENAJE COMBUSTIBLE																																0
	TOTAL	0	0	4390	295	563	530	1639	0	0	425	327	347	536	378	0	0	288	1571	494	312	1850	0	1654	432	581	574	623	3438	0	2356	0	**23603**
	AVGAS 100/130 ESMA																																
1	AVIONETA DIAMOND 1060				9	18		18			34	34		18	16			19		9					28	26	7		8				244
2	AVIONETA DIAMOND 1061				6	17		10			30	29		21					19	32		16				32		20	19				251
3	AVIONETA DIAMOND 1062																																0
4	AVIONETA DIAMOND 1063				18	6	29																				21		24				98
5	AVIONETA DIAMOND 1064										8	7	10	8	18				16		33	17			37	28	30						212
6	AVIONETA DIAMOND 1065					4	27					8	32						29		14					17	24		10				165
7	AVIONETA DIAMOND 1066					9	23	10			18	17	32	27						29	31	20				21	24	37					298
8	AVIONETA DIAMOND 1067						7																										7
9	AVIONETA DIAMOND 1068																																0
10	AVIONETA DIAMOND 1070				8		36				9	6	38	23	18			19		20		15			25	24							241
11	AVIONETA DIAMOND 1071					29	28					9	26					19	27	16	24				18		25	20					241
12	AVIONETA A150L FAE 503																																0
13	AVIONETA A150L FAE 511																																0
14	AVIONETA A150L FAE 515																																0
15	DRENAJE COMBUSTIBLE																																0
	OTROS REPARTOS																																
1	AVIONETA FAE 1040				52		55				65	43																					215
	TOTAL	0	0	0	93	83	205	38	0	0	164	153	138	97	52	0	0	57	91	106	102	68	0	0	108	148	131	77	61	0	0	0	**1972**
	JET-A-1 NAVAL																																
1	HELICOPTERO NAVAL																																0
	TOTAL	0	0	0	0	0	0	0	0	0	0	0	0	0	0	0	0	0	0	0	0	0	0	0	0	0	0	0	0	0	0	0	**0**

ELABORADO POR

JOSE MORENO A.
SGOP. TEC.AVC.
ENGDO. COMBUSTIBLES ESMA

REVISADO POR

WILSON ROBALINO P.
SUBS. TÉC. AVC.
SUPERVISOR ABASTECIMIENTOS ESMA

VISTO BUENO

FAUSTO CAIZALUISA T.
TCRNL. EMT. AVC.
COMANDANTE ESCD. ABASTECIEMIENTOS ESMA

VERYGLOBE
Cía.Ltda.

TABLA DE CALIBRACIÓN

ESCUELA SUPERIOR MILITAR DE AVIACIÓN "COSME RENNELLA B."

TANQUE TQ 1 JET-A1

SEPTIEMBRE 2014

VERYGLOBE

VERYGLOBE Cia.Ltda.

CERTIFICADO DE INSPECCION TABLA VOLUMÉTRICA
VGLOBE Nº. 14-021-TV-CH

IDENTIFICACIÓN DEL CERTIFICADO	VGLOBE Nº. 14-021-TV
FECHA DE EMISIÓN	QUITO Septiembre 10 de 2014
CLIENTE	ESMA
FECHA DE INSPECCIÓN	SALINAS Agosto 27 de 2014
OBJETO INSPECCIONADO	TANQUE: **N ° 1 JET A 1**
CAPACIDAD (GLS)	13717.5
CAPACIDAD (LITROS)	51926.7
MÉTODO UTILIZADO	CALIBRACIÓN LÍQUIDA
PROCEDIMIENTO UTILIZADO	PROCEDIMIENTO DE INSPECCIÓN CON EL PROPOSITO DE CALIBRACION LIQUIDA DE TANQUES HORIZONTALES PARA COMBUSTIBLE (VG-I-32)

Conforme al resultado de las mediciones obtenidas en campo, se realizó la tabla volumétrica. Los equipos utilizados son medidor de flujo patrón marca LIQUID CONTROL serie 533757 modelo M-40-2, bomba eléctrica de caudal MEYERS PKm 60-1, Termómetro: Marca LABORTHERM Modelo ASTM 97F serie 343 Rango -17,77°C a 48,88°C, certificado INEN LPTC-T-2012-430.Norma aplicada: Method for Liquid Calibration of Tanks API STANDARD 2555,REAFFIRMED, AUGUST 1987

Conformidad : El objeto inspeccionado esta apto para transportar la capacidad establecida en el documento adjunto.

Inspeccionado por: Vicente Vasquez Código: ARCH-VRY-09-1

Observaciones : Ninguna

CERTIFICADO VÁLIDO POR UN AÑO

Ing. Martín Gavilánez
DIRECTOR TÉCNICO

Se adjunta tabla volumétrica.

VERYGLOBE

oae

Fuente: Escuadrón Abastecimientos ESMA

VERYGLOBE

TABLA DE CALIBRACION

TQ-1 JET A 1

ESMA - SALINAS

DATOS DEL CUERPO CILINDRICO			DATOS DE LOS CASQUETES		
DIAMETRO INTERNO	3.040	MM	ALTURA	0	MM
LONGITUD	7.150	MM	ESPESOR	8	MM
ESPESOR	8,00	MM			

VOLUMEN BAJO NIVEL CERO: 1,2 Gls.

h(cm)	Litros	Galones	Bls	h(cm)	Litros	Galones	Bls	h(cm)	Litros	Galones	Bls	h(cm)	Litros	Galones	Bls	h(cm)	Litros	Galones	Bls	h(cm)	Litros	Galones	Bls
0,5	10,42	2,8	0,07	20,5	1516	400,4	9,53	40,5	4114	1.086,7	25,87	60,5	7342,4	1 939,6	46,18	80,5	11007	2.907,7	69,23	100,5	15010	3.965,3	94,41
1	21,15	5,6	0,13	21	1571	414,9	9,88	41	4188	1.106,3	26,34	61	7429,3	1.962,6	46,73	81	11103	2.933,0	69,83	101	15113	3.992,3	95,05
1,5	35,04	9,3	0,22	21,5	1626	429,6	10,23	41,5	4262	1.126,0	26,81	61,5	7516,5	1.985,6	47,28	81,5	11199	2.958,4	70,44	101,5	15215	4.019,4	95,70
2	51,47	13,6	0,32	22	1682	444,4	10,58	42	4337	1 145,7	27,28	62	7603,9	2.008,7	47,83	82	11295	2.983,9	71,04	102	15318	4.046,5	96,34
2,5	70,09	18,5	0,44	22,5	1739	459,3	10,94	42,5	4412	1.165,6	27,75	62,5	7691,6	2.031,9	48,38	82,5	11392	3.009,4	71,65	102,5	15420	4.073,6	96,99
3	90,66	24,0	0,57	23	1796	474,4	11,30	43	4488	1.185,5	28,23	63	7779,6	2.055,1	48,93	83	11489	3.035,0	72,26	103	15523	4.100,8	97,64
3,5	113,01	29,9	0,71	23,5	1854	489,7	11,66	43,5	4564	1.205,6	28,71	63,5	7867,9	2.078,5	49,49	83,5	11586	3.060,6	72,87	103,5	15626	4 128,0	98,28
4	137,00	36,2	0,86	24	1912	505,1	12,03	44	4640	1.225,8	29,18	64	7956,3	2.101,8	50,04	84	11683	3.086,2	73,48	104	15729	4.155,2	98,93
4,5	162,52	42,9	1,02	24,5	1971	520,7	12,40	44,5	4717	1.246,0	29,67	64,5	8045,1	2.125,3	50,60	84,5	11780	3.111,9	74,09	104,5	15832	4.182,4	99,58
5	189,48	50,1	1,19	25	2030	536,4	12,77	45	4794	1.266,4	30,15	65	8134,1	2.148,8	51,16	85	11877	3.137,7	74,71	105	15936	4.209,7	100,23
5,5	217,79	57,5	1,37	25,5	2090	552,2	13,15	45,5	4871	1.286,8	30,64	65,5	8223,3	2.172,4	51,72	85,5	11975	3.163,5	75,32	105,5	16039	4.237,0	100,88
6	247,40	65,4	1,56	26	2151	568,2	13,53	46	4949	1.307,3	31,13	66	8312,8	2.196,0	52,29	86	12073	3.189,3	75,94	106	16143	4.264,4	101,53
6,5	278,25	73,5	1,75	26,5	2212	584,3	13,91	46,5	5027	1.328,0	31,62	66,5	8402,6	2.219,7	52,85	86,5	12171	3.215,2	76,55	106,5	16246	4.291,8	102,19
7	310,27	82,0	1,95	27	2274	600,6	14,30	47	5105	1.348,7	32,11	67	8492,6	2.243,5	53,42	87	12269	3.241,1	77,17	107	16350	4.319,2	102,84
7,5	343,44	90,7	2,16	27,5	2336	617,0	14,69	47,5	5184	1.369,5	32,61	67,5	8582,8	2.267,3	53,98	87,5	12367	3.267,1	77,79	107,5	16454	4.346,6	103,49
8	377,70	99,8	2,38	28	2398	633,5	15,08	48	5263	1.390,4	33,10	68	8673,2	2.291,2	54,55	88	12466	3.293,1	78,41	108	16558	4.374,1	104,15
8,5	413,02	109,1	2,60	28,5	2461	650,2	15,48	48,5	5343	1.411,4	33,60	68,5	8763,9	2.315,2	55,12	88,5	12564	3.319,2	79,03	108,5	16662	4.401,6	104,80
9	449,36	118,7	2,83	29	2525	667,0	15,88	49	5422	1.432,4	34,11	69	8854,9	2.339,2	55,70	89	12663	3 345,3	79,65	109	16766	4.429,1	105,46
9,5	486,70	128,6	3,06	29,5	2589	684,0	16,28	49,5	5503	1.453,6	34,61	69,5	8946	2.363,3	56,27	89,5	12762	3.371,4	80,27	109,5	16870	4.456,7	106,11
10	525	138,7	3,30	30	2654	701,0	16,69	50	5583	1.474,8	35,12	70	9037,4	2.387,4	56,84	90	12861	3.397,6	80,90	110	16975	4.484,2	106,77
10,5	564,2	149,1	3,55	30,5	2719	718,2	17,10	50,5	5664	1.496,2	35,62	70,5	9129,1	2.411,6	57,42	90,5	12961	3.423,8	81,52	110,5	17079	4.511,9	107,43
11	604,4	159,7	3,80	31	2784	735,5	17,51	51	5745	1.517,6	36,13	71	9220,9	2.435,9	58,00	91	13060	3.450,1	82,14	111	17184	4.539,5	108,08
11,5	645,4	170,5	4,06	31,5	2850	753,0	17,93	51,5	5826	1.539,1	36,65	71,5	9313	2.460,2	58,58	91,5	13192	3.484,9	82,97	111,5	17289	4.567,1	108,74
12	687,3	181,6	4,32	32	2917	770,5	18,35	52	5908	1.560,7	37,16	72	9405,3	2.484,6	59,16	92	13292	3.511,3	83,60	112	17393	4.594,6	109,40
12,5	730,1	192,9	4,59	32,5	2984	788,2	18,77	52,5	5990	1.582,3	37,67	72,5	9497,8	2.509,0	59,74	92,5	13392	3.537,7	84,23	112,5	17498	4.622,5	110,06
13	773,6	204,4	4,87	33	3051	806,0	19,19	53	6072	1.604,1	38,19	73	9590,6	2.533,5	60,32	93	13492	3.564,1	84,86	113	17603	4.650,3	110,72
13,5	818	216,1	5,15	33,5	3119	824,0	19,62	53,5	6155	1.625,9	38,71	73,5	9683,5	2.558,1	60,91	93,5	13592	3.590,6	85,49	113,5	17708	4.678,0	111,38
14	863,2	228,0	5,43	34	3187	842,0	20,05	54	6238	1.647,8	39,23	74	9776,7	2.582,7	61,49	94	13692	3.617,1	86,12	114	17814	4.705,8	112,04
14,5	909,1	240,2	5,72	34,5	3256	860,2	20,48	54,5	6321	1.669,8	39,76	74,5	9870,1	2.607,4	62,08	94,5	13793	3.643,7	86,75	114,5	17919	4.733,6	112,71
15	955,8	252,5	6,01	35	3325	878,4	20,92	55	6404	1.691,9	40,28	75	9963,7	2.632,1	62,67	95	13894	3.670,3	87,39	115	18024	4.761,5	113,37
15,5	1003	265,0	6,31	35,5	3395	896,8	21,35	55,5	6488	1.714,0	40,81	75,5	10058	2.656,9	63,26	95,5	13994	3.696,9	88,02	115,5	18130	4.789,3	114,03
16	1051	277,8	6,61	36	3465	915,3	21,79	56	6572	1.736,2	41,34	76	10152	2.681,7	63,85	96	14095	3.723,6	88,66	116	18235	4.817,2	114,70
16,5	1100	290,7	6,92	36,5	3535	933,9	22,24	56,5	6657	1.758,5	41,87	76,5	10246	2.706,6	64,44	96,5	14196	3.750,3	89,29	116,5	18341	4.845,1	115,36
17	1150	303,8	7,23	37	3606	952,7	22,68	57	6742	1.780,9	42,40	77	10340	2.731,6	65,04	97	14298	3.777,0	89,93	117	18447	4.873,1	116,03
17,5	1200	317,1	7,55	37,5	3678	971,5	23,13	57,5	6827	1.803,4	42,94	77,5	10435	2.756,6	65,63	97,5	14399	3.803,8	90,57	117,5	18553	4.901,0	116,69
18	1251	330,5	7,87	38	3749	990,4	23,58	58	6912	1.825,9	43,47	78	10530	2.781,6	66,23	98	14501	3.830,6	91,21	118	18658	4.929,0	117,36
18,5	1303	344,2	8,19	38,5	3821	1.009,5	24,04	58,5	6997	1 848,5	44,01	78,5	10625	2.806,7	66,83	98,5	14602	3.857,5	91,85	118,5	18764	4.957,0	118,02
19	1355	358,0	8,52	39	3894	1.028,6	24,49	59	7083	1 871,2	44,55	79	10720	2.831,9	67,43	99	14704	3.884,4	92,49	119	18870	4.985,0	118,69
19,5	1408	372,0	8,86	39,5	3967	1.047 9	24,95	59,5	7169	1 893,9	45,09	79,5	10815	2.857,1	68,03	99,5	14806	3 911,3	93,13	119,5	18977	5.013,0	119,36
20	1462	386,1	9,19	40	4040	1.067,3	25,41	60	7256	1.916,7	45,64	80	10911	2.882,3	68,63	100	14908	3.938,3	93,77	120	19083	5 041,1	120,03

FECHA CALIBRACION : SEPTIEMBRE 10 DE 2014

FUENTE

VERYGLOBE

VERYGLOBE

TABLA DE CALIBRACION

TQ-1 JET A 1

ESMA - SALINAS

h(cm)	Litros	Galones	Bls	h(cm)	Litros	Galones	Bls	h(cm)	Litros	Galones	Bls	h(cm)	Litros	Galones	Bls	h(cm)	Litros	Galones	Bls	h(cm)	Litros	Galones	Bls
120,5	19189	5.069,2	120,69	145,5	24574	6.491,8	154,57	170,5	29998	7.924,6	188,68	195,5	35312	9.328,3	222,10	220,5	40356	10.660,8	253,83	245,5	44944	11.872,7	282,68
121	19295	5.097,3	121,36	146	24683	6.520,5	155,25	171	30106	7.953,1	189,36	196	35416	9.355,8	222,76	221	40453	10.686,4	254,44	246	45029	11.895,3	283,22
121,5	19402	5.125,4	122,03	146,5	24792	6.549,2	155,93	171,5	30214	7.981,6	190,04	196,5	35520	9.383,2	223,41	221,5	40549	10.711,9	255,05	246,5	45114	11.917,9	283,76
122	19508	5.153,5	122,70	147	24900	6.577,9	156,62	172	30322	8.010,1	190,72	197	35624	9.410,7	224,06	222	40646	10.737,4	255,65	247	45199	11.940,3	284,29
122,5	19615	5.181,7	123,37	147,5	25009	6.606,6	157,30	172,5	30429	8.038,5	191,39	197,5	35727	9.438,1	224,72	222,5	40742	10.762,9	256,26	247,5	45284	11.962,7	284,83
123	19722	5.209,9	124,04	148	25118	6.635,3	157,98	173	30537	8.067,0	192,07	198	35831	9.465,5	225,37	223	40839	10.788,3	256,86	248	45368	11.985,0	285,36
123,5	19828	5.238,0	124,72	148,5	25226	6.664,0	158,67	173,5	30645	8.095,4	192,75	198,5	35934	9.492,8	226,02	223,5	40935	10.813,7	257,47	248,5	45453	12.007,2	285,89
124	19935	5.266,3	125,39	149	25335	6.692,7	159,35	174	30752	8.123,8	193,42	199	36038	9.520,1	226,67	224	41030	10.839,0	258,07	249	45536	12.029,3	286,41
124,5	20042	5.294,5	126,06	149,5	25443	6.721,4	160,03	174,5	30860	8.152,2	194,10	199,5	36141	9.547,4	227,32	224,5	41126	10.864,2	258,67	249,5	45620	12.051,4	286,94
125	20149	5.322,7	126,73	150	25552	6.750,1	160,72	175	30967	8.180,6	194,78	200	36244	9.574,7	227,97	225	41221	10.889,5	259,27	250	45703	12.073,4	287,46
125,5	20256	5.351,0	127,40	150,5	25661	6.778,8	161,40	175,5	31075	8.209,0	195,45	200,5	36347	9.601,9	228,62	225,5	41317	10.914,6	259,87	250,5	45786	12.095,3	287,98
126	20363	5.379,3	128,08	151	25770	6.807,5	162,08	176	31182	8.237,3	196,13	201	36450	9.629,1	229,26	226	41412	10.939,7	260,47	251	45869	12.117,1	288,50
126,5	20470	5.407,6	128,75	151,5	25878	6.836,2	162,77	176,5	31289	8.265,7	196,80	201,5	36553	9.656,3	229,91	226,5	41506	10.964,8	261,07	251,5	45951	12.138,9	289,02
127	20577	5.435,9	129,43	152	25987	6.865,0	163,45	177	31396	8.294,0	197,48	202	36656	9.683,4	230,56	227	41601	10.989,8	261,66	252	46033	12.160,5	289,54
127,5	20684	5.464,2	130,10	152,5	26096	6.893,7	164,13	177,5	31504	8.322,3	198,15	202,5	36758	9.710,5	231,20	227,5	41696	11.014,7	262,25	252,5	46115	12.182,1	290,05
128	20792	5.492,6	130,78	153	26204	6.922,4	164,82	178	31611	8.350,6	198,82	203	36861	9.737,5	231,85	228	41790	11.039,6	262,85	253	46196	12.203,6	290,56
128,5	20899	5.520,9	131,45	153,5	26313	6.951,1	165,50	178,5	31718	8.378,9	199,50	203,5	36963	9.764,6	232,49	228,5	41884	11.064,4	263,44	253,5	46277	12.225,0	291,07
129	21007	5.549,3	132,13	154	26422	6.979,8	166,19	179	31825	8.407,2	200,17	204	37065	9.791,6	233,13	229	41978	11.089,2	264,03	254	46358	12.246,3	291,58
129,5	21114	5.577,7	132,80	154,5	26530	7.008,5	166,87	179,5	31932	8.435,4	200,84	204,5	37167	9.818,5	233,77	229,5	42071	11.113,9	264,62	254,5	46438	12.267,6	292,08
130	21221	5.606,1	133,48	155	26639	7.037,2	167,55	180	32039	8.463,8	201,52	205	37269	9.845,5	234,42	230	42165	11.138,6	265,20	255	46518	12.288,7	292,59
130,5	21329	5.634,5	134,15	155,5	26748	7.065,9	168,24	180,5	32145	8.491,8	202,19	205,5	37371	9.872,3	235,06	230,5	42258	11.163,2	265,79	255,5	46598	12.309,8	293,09
131	21437	5.662,9	134,83	156	26856	7.094,6	168,92	181	32252	8.520,0	202,86	206	37473	9.899,2	235,70	231	42351	11.187,8	266,38	256	46677	12.330,8	293,59
131,5	21544	5.691,4	135,51	156,5	26965	7.123,3	169,60	181,5	32359	8.548,2	203,53	206,5	37574	9.926,0	236,33	231,5	42443	11.212,3	266,96	256,5	46756	12.351,7	294,09
132	21652	5.719,8	136,19	157	27074	7.152,0	170,29	182	32465	8.576,4	204,20	207	37676	9.952,8	236,97	232	42536	11.236,7	267,54	257	46835	12.372,5	294,58
132,5	21760	5.748,3	136,86	157,5	27182	7.180,7	170,97	182,5	32572	8.604,5	204,87	207,5	37777	9.979,5	237,61	232,5	42628	11.261,1	268,12	257,5	46914	12.393,2	295,08
133	21868	5.776,8	137,54	158	27291	7.209,4	171,65	183	32678	8.632,6	205,54	208	37878	10.006,3	238,24	233	42720	11.285,4	268,70	258	46992	12.413,6	295,57
133,5	21975	5.805,3	138,22	158,5	27399	7.238,1	172,34	183,5	32785	8.660,7	206,21	208,5	37979	10.032,9	238,88	233,5	42812	11.309,7	269,28	258,5	47069	12.434,3	296,06
134	22083	5.833,8	138,90	159	27508	7.266,8	173,02	184	32891	8.688,8	206,88	209	38080	10.059,6	239,51	234	42904	11.333,9	269,85	259	47147	12.454,8	296,54
134,5	22191	5.862,3	139,58	159,5	27617	7.295,5	173,70	184,5	32997	8.716,9	207,54	209,5	38181	10.086,2	240,15	234,5	42995	11.358,0	270,43	259,5	47224	12.475,1	297,03
135	22299	5.890,8	140,26	160	27725	7.324,1	174,38	185	33103	8.744,9	208,21	210	38281	10.112,7	240,78	235	43086	11.382,1	271,00	260	47300	12.495,3	297,51
135,5	22407	5.919,3	140,94	160,5	27834	7.352,8	175,07	185,5	33209	8.772,9	208,88	210,5	38381	10.139,2	241,41	235,5	43177	11.406,1	271,57	260,5	47377	12.515,5	297,99
136	22515	5.947,9	141,62	161	27942	7.381,5	175,75	186	33315	8.800,9	209,55	211	38482	10.165,7	242,04	236	43268	11.430,1	272,14	261	47453	12.535,5	298,47
136,5	22624	5.976,5	142,30	161,5	28051	7.410,1	176,43	186,5	33421	8.828,9	210,21	211,5	38582	10.192,1	242,67	236,5	43358	11.454,0	272,71	261,5	47528	12.555,5	298,94
137	22732	6.005,0	142,98	162	28159	7.438,8	177,11	187	33527	8.856,8	210,88	212	38682	10.218,5	243,30	237	43449	11.477,8	273,28	262	47603	12.575,4	299,41
137,5	22840	6.033,6	143,66	162,5	28267	7.467,4	177,80	187,5	33633	8.884,7	211,54	212,5	38781	10.244,9	243,93	237,5	43539	11.501,6	273,85	262,5	47678	12.595,1	299,88
138	22948	6.062,2	144,34	163	28376	7.496,1	178,48	188	33738	8.912,7	212,21	213	38881	10.271,2	244,55	238	43629	11.525,3	274,41	263	47753	12.614,8	300,35
138,5	23056	6.090,8	145,02	163,5	28484	7.524,7	179,16	188,5	33844	8.940,5	212,87	213,5	38981	10.297,5	245,18	238,5	43718	11.548,9	274,97	263,5	47827	12.634,3	300,82
139	23165	6.119,4	145,70	164	28593	7.553,3	179,84	189	33949	8.968,4	213,53	214	39080	10.323,7	245,80	239	43807	11.572,5	275,54	264	47900	12.653,8	301,28
139,5	23273	6.148,0	146,38	164,5	28701	7.581,9	180,52	189,5	34055	8.996,2	214,20	214,5	39179	10.349,9	246,43	239,5	43896	11.596,0	276,10	264,5	47973	12.673,2	301,74
140	23381	6.176,6	147,06	165	28809	7.610,5	181,20	190	34160	9.024,0	214,86	215	39278	10.376,1	247,05	240	43985	11.619,4	276,65	265	48046	12.692,4	302,20
140,5	23490	6.205,2	147,74	165,5	28918	7.639,1	181,88	190,5	34265	9.051,8	215,52	215,5	39377	10.402,2	247,67	240,5	44073	11.642,9	277,21	265,5	48119	12.711,6	302,66
141	23598	6.233,9	148,43	166	29026	7.667,7	182,57	191	34370	9.079,6	216,18	216	39475	10.428,2	248,29	241	44161	11.666,1	277,76	266	48191	12.730,6	303,11
141,5	23706	6.262,5	149,11	166,5	29134	7.696,3	183,25	191,5	34475	9.107,3	216,84	216,5	39574	10.454,3	248,91	241,5	44249	11.689,4	278,32	266,5	48263	12.749,5	303,56
142	23815	6.291,1	149,79	167	29242	7.724,9	183,93	192	34580	9.135,0	217,50	217	39672	10.480,2	249,53	242	44337	11.712,5	278,87	267	48334	12.768,4	304,01
142,5	23923	6.319,8	150,47	167,5	29350	7.753,5	184,61	192,5	34685	9.162,7	218,16	217,5	39770	10.506,2	250,15	242,5	44425	11.735,6	279,42	267,5	48405	12.787,1	304,45
143	24032	6.348,5	151,15	168	29458	7.782,0	185,29	193	34790	9.190,4	218,82	218	39868	10.532,0	250,76	243	44512	11.758,7	279,97	268	48475	12.805,7	304,90
143,5	24140	6.377,1	151,84	168,5	29566	7.810,6	185,97	193,5	34894	9.218,0	219,48	218,5	39966	10.557,9	251,38	243,5	44599	11.781,6	280,51	268,5	48545	12.824,2	305,34
144	24249	6.405,8	152,52	169	29674	7.839,1	186,65	194	34999	9.245,6	220,13	219	40064	10.583,7	251,99	244	44685	11.804,5	281,06	269	48615	12.842,5	305,77
144,5	24357	6.434,5	153,20	169,5	29782	7.867,6	187,32	194,5	35103	9.273,2	220,79	219,5	40161	10.609,4	252,61	244,5	44772	11.827,3	281,60	269,5	48684	12.860,9	306,21
145	24466	6.463,1	153,88	170	29890	7.896,1	188,00	195	35207	9.300,8	221,45	220	40259	10.635,1	253,22	245	44858	11.850,1	282,14	270	48753	12.879,0	306,64

FECHA CALIBRACION: SEPTIEMBRE 10 DE 2014

VERYGLOBE

Fuente: Escuadrón Abastecimientos ESMA

VERYGLOBE Cia.Ltda.

TABLA DE CALIBRACION

TQ-1 JET A 1

ESMA - SALINAS

h(cm)	Litros	Galones	Bls	h(cm)	Litros	Galones	Bls	h(cm)	Litros	Galones	Bls	h(cm)	Litros	Galones	Bls	h(cm)	Litros	Galones	Bls	h(cm)	Litros	Galones	Bls
270,5	48821	12.897,0	307,07	295,5	51525	13.611,4	324,08																
271	48889	12.914,9	307,50	296	51561	13.620,8	324,30																
271,5	48956	12.932,7	307,92	296,5	51595	13.629,8	324,52																
272	49023	12.950,4	308,34	297	51628	13.638,5	324,73																
272,5	49089	12.967,9	308,76	297,5	51660	13.647,0	324,93																
273	49155	12.985,4	309,18	298	51691	13.655,1	325,12																
273,5	49221	13.002,7	309,59	298,5	51720	13.662,9	325,31																
274	49286	13.019,9	310,00	299	51748	13.670,4	325,49																
274,5	49351	13.036,9	310,40	299,5	51775	13.677,5	325,65																
275	49415	13.053,9	310,81	300	51801	13.684,2	325,81																
275,5	49478	13.070,7	311,21	300,5	51825	13.690,5	325,97																
276	49541	13.087,3	311,60	301	51847	13.696,4	326,11																
276,5	49604	13.103,9	312,00	301,5	51868	13.701,8	326,23																
277	49666	13.120,3	312,39	302	51886	13.706,7	326,35																
277,5	49728	13.136,5	312,77	302,5	51902	13.711,0	326,45																
278	49789	13.152,6	313,16	303	51916	13.714,7	326,54																
278,5	49849	13.168,6	313,54	303,5	51927	13.717,5	326,61																
279	49909	13.184,5	313,92																				
279,5	49968	13.200,2	314,29																				
280	50027	13.215,7	314,66																				
280,5	50086	13.231,1	315,03																				
281	50143	13.246,4	315,39																				
281,5	50201	13.261,5	315,75																				
282	50257	13.276,4	316,11																				
282,5	50313	13.291,2	316,46																				
283	50369	13.305,9	316,81																				
283,5	50423	13.320,3	317,15																				
284	50477	13.334,6	317,49																				
284,5	50531	13.348,8	317,83																				
285	50584	13.362,8	318,16																				
285,5	50636	13.376,6	318,49																				
286	50688	13.390,2	318,81																				
286,5	50739	13.403,7	319,13																				
287	50789	13.416,9	319,45																				
287,5	50839	13.430,0	319,76																				
288	50887	13.442,9	320,07																				
288,5	50936	13.455,7	320,37																				
289	50983	13.468,2	320,67																				
289,5	51030	13.480,5	320,96																				
290	51076	13.492,6	321,25																				
290,5	51121	13.504,6	321,54																				
291	51165	13.516,3	321,82																				
291,5	51209	13.527,8	322,09																				
292	51251	13.539,1	322,36																				
292,5	51293	13.550,1	322,62																				
293	51334	13.560,9	322,88																				
293,5	51374	13.571,5	323,13																				
294	51413	13.581,9	323,38																				
294,5	51452	13.592,0	323,62																				
295	51489	13.601,9	323,85																				

FECHA CALIBRACION : SEPTIEMBRE 10 DE 2014

VERYGLOBE

Fuente: Escuadrilla Abastecimientos ESMA (Salinas-Ecuador)

Welded Tanks for Oil Storage

API STANDARD 650
TWELFTH EDITION, MARCH 2013

AMERICAN PETROLEUM INSTITUTE

Special Notes

API publications necessarily address problems of a general nature. With respect to particular circumstances, local, state, and federal laws and regulations should be reviewed.

Neither API nor any of API's employees, subcontractors, consultants, committees, or other assignees make any warranty or representation, either express or implied, with respect to the accuracy, completeness, or usefulness of the information contained herein, or assume any liability or responsibility for any use, or the results of such use, of any information or process disclosed in this publication. Neither API nor any of API's employees, subcontractors, consultants, or other assignees represent that use of this publication would not infringe upon privately owned rights.

API publications may be used by anyone desiring to do so. Every effort has been made by the Institute to assure the accuracy and reliability of the data contained in them; however, the Institute makes no representation, warranty, or guarantee in connection with this publication and hereby expressly disclaims any liability or responsibility for loss or damage resulting from its use or for the violation of any authorities having jurisdiction with which this publication may conflict.

API publications are published to facilitate the broad availability of proven, sound engineering and operating practices. These publications are not intended to obviate the need for applying sound engineering judgment regarding when and where these publications should be utilized. The formulation and publication of API publications is not intended in any way to inhibit anyone from using any other practices.

Any manufacturer marking equipment or materials in conformance with the marking requirements of an API standard is solely responsible for complying with all the applicable requirements of that standard. API does not represent, warrant, or guarantee that such products do in fact conform to the applicable API standard.

API is not undertaking to meet the duties of employers, manufacturers, or suppliers to warn and properly train and equip their employees, and others exposed, concerning health and safety risks and precautions, nor undertaking their obligations to comply with authorities having jurisdiction.

All rights reserved. No part of this work may be reproduced, translated, stored in a retrieval system, or transmitted by any means, electronic, mechanical, photocopying, recording, or otherwise, without prior written permission from the publisher. Contact the Publisher, API Publishing Services, 1220 L Street, NW, Washington, DC 20005.

Copyright © 2013 American Petroleum Institute

Notice

Instructions for Submitting a Proposed Revision to this Standard Under Continuous Maintenance

This standard is maintained under continuous maintenance procedures by the American Petroleum Institute for which the Standards Department. These procedures establish a documented program for regular publication of addenda or revisions, including timely and documented consensus action on requests for revisions to any part of the standard. See Annex D for additional information. Proposed revisions shall be submitted to the Director, Standards Department, American Petroleum Institute, 1220 L Street, NW, Washington, D.C. 20005-4070, standards@api.org.

Foreword

This Standard is based on the accumulated knowledge and experience of Purchasers and Manufacturers of welded oil storage tanks of various sizes and capacities for internal pressures not more than 17.2 kPa ($2^1/_2$ pounds per square inch) gauge. This Standard is meant to be a purchase specification to facilitate the manufacture and procurement of storage tanks for the petroleum industry.

If the tanks are purchased in accordance with this Standard, the Purchaser is required to specify certain basic requirements. The Purchaser may want to modify, delete, or amplify sections of this Standard, but reference to this Standard shall not be made on the nameplates of or on the Manufacturer's certification for tanks that do not fulfill the minimum requirements of this Standard or that exceed its limitations. It is strongly recommended that any modifications, deletions, or amplifications be made by supplementing this Standard rather than by rewriting or incorporating sections of it into another complete standard.

The design rules given in this Standard are minimum requirements. More stringent design rules specified by the Purchaser or furnished by the Manufacturer are acceptable when mutually agreed upon by the Purchaser and the Manufacturer. This Standard is not to be interpreted as approving, recommending, or endorsing any specific design or as limiting the method of design or construction.

Shall: As used in a standard, "shall" denotes a minimum requirement in order to conform to the specification.

Should: As used in a standard, "should" denotes a recommendation or that which is advised but not required in order to conform to the specification.

- This Standard is not intended to cover storage tanks that are to be erected in areas subject to regulations more stringent than the specifications in this Standard. When this Standard is specified for such tanks, it should be followed insofar as it does not conflict with local requirements. The Purchaser is responsible for specifying any jurisdictional requirements applicable to the design and construction of the tank.

After revisions to this Standard have been issued, they may be applied to tanks that are to be completed after the date of issue. The tank nameplate shall state the date of the edition of the Standard and any revision to that edition to which the tank has been designed and constructed.

- Each edition, revision, or addenda to this API Standard may be used beginning with the date of issuance shown on the cover page for that edition, revision, or addenda. Each edition, revision, or addenda to this API Standard becomes effective six months after the date of issuance for equipment that is certified as being constructed, and inspected per this Standard. During the six-month time between the date of issuance of the edition, revision, or addenda and the effective date, the Purchaser and the Manufacturer shall specify to which edition, revision, or addenda the equipment is to be constructed and inspected.

Important Information Concerning Use of Asbestos or Alternative Materials

Asbestos is specified or referenced for certain components of the equipment described in some API standards. It has been of extreme usefulness in minimizing fire hazards associated with petroleum processing. It has also been a universal sealing material, compatible with most refining fluid services.

Certain serious adverse health effects are associated with asbestos, among them the serious and often fatal diseases of lung cancer, asbestosis, and mesothelioma (a cancer of the chest and abdominal linings). The degree of exposure to asbestos varies with the product and the work practices involved.

Consult the most recent edition of the Occupational Safety and Health Administration (OSHA), U.S. Department of Labor, Occupational Safety and Health Standard for Asbestos, Tremolite, Anthophyllite, and Actinolite, 29 *Code of Federal Regulations* Section 1910.1001; the U.S. Environmental Protection Agency, National Emission Standard for Asbestos, 40 *Code of Federal Regulations* Sections 61.140 through 61.156; and the U.S. Environmental Protection Agency (EPA) rule on labeling requirements and phased banning of asbestos products (Sections 763.160-179).

There are currently in use and under development a number of substitute materials to replace asbestos in certain applications. Manufacturers and users are encouraged to develop and use effective substitute materials that can meet the specifications for, and operating requirements of, the equipment to which they would apply.

SAFETY AND HEALTH INFORMATION WITH RESPECT TO PARTICULAR PRODUCTS OR MATERIALS CAN BE OBTAINED FROM THE EMPLOYER, THE MANUFACTURER OR SUPPLIER OF THAT PRODUCT OR MATERIAL, OR THE MATERIAL SAFETY DATASHEET.

Contents

Page

1 Scope 1-1
1.1 General 1-1
1.2 Limitations 1-4
1.3 Responsibilities 1-4
1.4 Documentation Requirements 1-5
1.5 Formulas 1-5

2 Normative References 2-1

3 Terms and Definitions 3-1

4 Materials 4-1
4.1 General 4-1
4.2 Plates 4-2
4.3 Sheets 4-9
4.4 Structural Shapes 4-9
4.5 Piping and Forgings 4-14
4.6 Flanges 4-15
4.7 Bolting 4-17
4.8 Welding Electrodes 4-17
4.9 Gaskets 4-17

5 Design 5-1
5.1 Joints 5-1
5.2 Design Considerations 5-9
5.3 Special Considerations 5-12
5.4 Bottom Plates 5-14
5.5 Annular Bottom Plates 5-15
5.6 Shell Design 5-17
5.7 Shell Openings 5-27
5.8 Shell Attachments and Tank Appurtenances 5-64
5.9 Top and Intermediate Stiffening Rings 5-77
5.10 Roofs 5-86
5.11 Wind Load on Tanks (Overturning Stability) 5-94
5.12 Tank Anchorage 5-96

6 Fabrication 6-1
6.1 General 6-1
6.2 Shop Inspection 6-2

7 Erection 7-1
7.1 General 7-1
7.2 Details of Welding 7-1
7.3 Examination, Inspection, and Repairs 7-5
7.4 Repairs to Welds 7-9
7.5 Dimensional Tolerances 7-10

8 Methods of Examining Joints 8-1
8.1 Radiographic Method 8-1
8.2 Magnetic Particle Examination 8-5
8.3 Ultrasonic Examination 8-5
8.4 Liquid Penetrant Examination 8-5

Page

8.5 Visual Examination 8-6
8.6 Vacuum Testing 8-7

9 Welding Procedure and Welder Qualifications 9-1
9.1 Definitions 9-1
9.2 Qualification of Welding Procedures 9-1
9.3 Qualification of Welders 9-2
9.4 Identification of Welded Joints 9-3

10 Marking 10-1
10.1 Nameplates 10-1
10.2 Division of Responsibility 10-3
10.3 Certification 10-3

Annex A (normative) **Optional Design Basis for Small Tanks** A-1

Annex AL (normative) **Aluminum Storage Tanks** AL-1

Annex B (informative) **Recommendations for Design and Construction of Foundations for Aboveground Oil Storage Tanks** B-1

Annex C (normative) **External Floating Roofs** C-1

Annex D (informative) **Inquiries and Suggestions for Change** D-1

Annex E (normative) **Seismic Design of Storage Tanks** E-1

Annex EC (informative) **Commentary on Annex E** EC-1

Annex F (normative) **Design of Tanks for Small Internal Pressures** F-1

Annex G (normative) **Structurally-Supported Aluminum Dome Roofs** G-1

Annex H (normative) **Internal Floating Roofs** H-1

Annex I (normative) **Undertank Leak Detection and Subgrade Protection** I-1

Annex J (normative) **Shop-Assembled Storage Tanks** J-1

Annex K (informative) **Sample Applications of the Variable-Design-Point Method to Determine Shell-Plate Thickness** K-1

Annex L (normative) **API Standard 650 Storage Tank Data Sheet** L-1

Annex M (normative) **Requirements for Tanks Operating at Elevated Temperatures** M-1

Annex N (normative) **Use of New Materials That Are Not Identified** N-1

Annex O (informative) **Recommendations for Under-Bottom Connections** O-1

Annex P (normative) **Allowable External Loads on Tank Shell Openings** P-1

Annex S (normative) **Austenitic Stainless Steel Storage Tanks** S-1

Annex SC (normative) **Stainless and Carbon Steel Mixed Materials Storage Tanks** SC-1

Annex T (informative) **NDE Requirements Summary** T-1

Annex U (normative) **Ultrasonic Examination in Lieu of Radiography** U-1

Annex V (normative) **Design of Storage Tanks for External Pressure** V-1

Annex W (normative) **Commercial and Documentation Recommendations** W-1

Annex X (normative) **Duplex Stainless Steel Storage Tanks** X-1

Annex Y (informative) **API Monogram** Y-1

Page

Figures

4.1a Minimum Permissible Design Metal Temperature for Materials Used in Tank Shells without Impact Testing (SI) 4-7
4.1b Minimum Permissible Design Metal Temperature for Materials Used in Tank Shells without Impact Testing (USC) 4-8
4.2 Isothermal Lines of Lowest One-Day Mean Temperatures (°F) [°C = (°F – 32)] 4-10
4.3 Governing Thickness for Impact Test Determination of Shell Nozzle and Manhole Materials 4-16
5.1 Typical Vertical Shell Joints 5-3
5.2 Typical Horizontal Shell Joints 5-4
5.3a Typical Roof and Bottom Joints 5-5
5.3b Method for Preparing Lap-welded Bottom Plates under Tank Shell 5-6
5.3c Detail of Double Fillet-groove Weld for Annular Bottom Plates with a Nominal Thickness Greater than 13 mm (1/2 in.) 5-6
5.3d Spacing of Three-Plate Welds at Annular Plates 5-7
5.4 Storage Tank 5-12
5.5 Drip Ring (Suggested Detail) 5-14
5.6 Minimum Weld Requirements for Openings in Shells According to 5.7.3 5-28
5.7a Shell Manhole 5-34
5.7b Details of Shell Manholes and Nozzles 5-35
5.8 Shell Nozzles 5-36
5.9 Minimum Spacing of Welds and Extent of Related Radiographic Examination 5-50
5.10 Shell Nozzle Flanges 5-52
5.11 Area Coefficient for Determining Minimum Reinforcement of Flush-type Cleanout Fittings 5-54
5.12 Flush-Type Cleanout Fittings 5-55
5.13 Flush-type Cleanout Fitting Supports 5-56
5.14 Flush-type Shell Connection 5-60
5.15 Rotation of Shell Connection 5-63
5.16 Roof Manholes 5-67
5.17 Rectangular Roof Openings with Flanged Covers 5-71
5.18 Rectangular Roof Openings with Hinged Cover 5-72
5.19 Flanged Roof Nozzles 5-73
5.20 Threaded Roof Nozzles 5-73
5.21 Drawoff Sump 5-73
5.22 Scaffold Cable Support 5-74
5.23 Grounding Lug 5-77
5.24 Typical Stiffening-ring Sections for Tank Shells 5-80
5.25 Stairway Opening through Stiffening Ring 5-83
5.26 Some Acceptable Column Base Details 5-91
5.27 Overturning Check for Unanchored Tanks 5-94
6.1 Shaping of Plates 6-2
8.1 Radiographic Requirements for Tank Shells 8-2
10.1 Manufacturer's Nameplate 10-1
10.2 Manufacturer's Certification Letter 10-3
AL.1 Cover Plate Thickness for Shell Manholes and Cleanout Fittings AL-13
AL.2 Flange Plate Thickness for Shell Manholes and Cleanout Fittings AL-14
AL.3 Bottom Reinforcing Plate Thickness for Cleanout Fittings AL-15
AL.4 Stresses in Roof Plates AL-18
B.1 Example of Foundation with Concrete Ringwall B-4
B.2 Example of Foundation with Crushed Stone Ringwall B-5
E.1 Coefficient C_i E-13
EC.1 Maximum Earthquake Response Spectrum EC-4
EC.2 Earthquake Response Spectrum Notation EC-4

Page

EC.3 Site Specific Response Spectrum EC-5
EC.4 Deterministic Lower Limit on MCE Response Spectrum EC-5
EC.5 Relationship of Probabilistic and Deterministic Response Spectra EC-6
EC.6 Sloshing Factor, K_s EC-7
EC.7 Design Response Spectra for Ground-Supported Liquid Storage Tanks EC-8
EC.8 Effective Weight of Liquid Ratio EC-10
EC.9 Center of Action of Effective Forces EC-10
EC.11 Anchor Strap Attachment to Shell EC-12
EC.10 Overturning Moment EC-12
F.1 Annex F Decision Tree F-2
F.2 Permissible Details of Compression Rings F-3
G.1 Data Sheet for a Structurally-Supported Aluminum Dome Added to an Existing Tank G-2
G.2 Typical Roof Nozzle G-9
I.1 Concrete Ringwall with Undertank Lead Detection at the Tank Perimeter (Typical Arrangement) I-2
I.2 Crushed Stone Ringwall with Undertank Leak Detection at the Tank Perimeter (Typical Arrangement) I-3
I.3 Earthen Foundation with Undertank Leak Detection at the Tank Perimeter (Typical Arrangement) I-3
I.4 Double Steel Bottom with Leak Detection at the Tank Perimeter (Typical Arrangement) I-3
I.5 Double Steel Bottom with Leak Detection at the Tank Perimeter (Typical Arrangement) I-5
I.6 Reinforced Concrete Slab with Leak Detection at the Perimeter (Typical Arrangement) I-5
I.7 Reinforced Concrete Slab I-6
I.8 Typical Drawoff Sump I-7
I.9 Center Sump for Downward-Sloped Bottom I-7
I.10 Typical Leak Detection Wells I-8
I.11 Tanks Supported by Grillage Members (General Arrangement) I-9
O.1 Example of Under-Bottom Connection with Concrete Ringwall Foundation O-3
O.2 Example of Under-Bottom Connection with Concrete Ringwall Foundation and Improved Tank Bottom and Shell Support O-4
O.3 Example of Under-Bottom Connection with Earth-Type Foundation O-5
P.1 Nomenclature for Piping Loads and Deformation P-4
P.2a Stiffness Coefficient for Radial Load: Reinforcement on Shell (*L/2a* = 1.0) P-6
P.2b Stiffness Coefficient for Longitudinal Moment: Reinforcement on Shell (*L/2a* = 1.0) P-6
P.2c Stiffness Coefficient for Circumferential Moment: Reinforcement on Shell (*L/2a* = 1.0) P-7
P.2d Stiffness Coefficient for Radial Load: Reinforcement on Shell (*L/2a* = 1.5) P-7
P.2e Stiffness Coefficient for Longitudinal Moment: Reinforcement on Shell (*L/2a* = 1.5) P-8
P.2f Stiffness Coefficient for Circumferential Moment: Reinforcement on Shell (*L/2a* = 1.5) P-8
P.2g Stiffness Coefficient for Radial Load: Reinforcement in Nozzle Neck Only (*L/2a* = 1.0) P-9
P.2h Stiffness Coefficient for Longitudinal Moment: Reinforcement in Nozzle Neck Only (*L/2a* = 1.0) P-9
P.2i Stiffness Coefficient for Circumferential Moment: Reinforcement in Nozzle Neck Only (*L/2a* = 1.0) P-10
P.2j Stiffness Coefficient for Radial Load: Reinforcement in Nozzle Neck Only (*L/2a* = 1.5) P-10
P.2k Stiffness Coefficient for Longitudinal Moment: Reinforcement in Nozzle Neck Only (*L/2a* = 1.5) P-11
P.2l Stiffness Coefficient for Circumferential Moment: Reinforcement in Nozzle Neck Only (*L/2a* = 1.5) P-11
P.3a Construction of Nomogram for b_1, b_2, c_1, c_2 Boundary P-12
P.3b Construction of Nomogram for b_1, c_3 Boundary P-12
P.4a Obtaining Coefficients Y_F and Y_L P-13
P.4b Obtaining Coefficient Y_C P-14

Page

P.5a Determination of Allowable Loads from Nomogram: F_R and M_L P-15
P.5b Determination of Allowable Loads from Nomogram: F_R and M_C P-15
P.6 Low-Type Nozzle with Reinforcement on Shell P-16
P.7 Allowable-Load Nomograms for Sample Problem P-21
V.1a Dimensions for Self-Supporting Cone Roof V-6
V.1b Dimensions for Self-Supporting Dome Roof V-9

Tables

1.1 Status of Annexes to API Standard 650 1-2
4.1 Maximum Permissible Alloy Content 4-4
4.2 Acceptable Grades of Plate Material Produced to National Standards 4-5
4.3a Linear Equations for Figure 4.1a (SI) 4-9
4.3b Linear Equations for Figure 4.1b (USC) 4-9
4.4a Material Groups (SI) 4-11
4.4b Material Groups (USC) 4-12
4.5a Minimum Impact Test Requirements for Plates (SI) 4-13
4.5b Minimum Impact Test Requirements for Plates (USC) 4-13
5.1a Annular Bottom-Plate Thicknesses (t_b) (SI) 5-16
5.1b Annular Bottom-Plate Thicknesses (t_b) (USC) 5-16
5.2a Permissible Plate Materials and Allowable Stresses (SI) 5-18
5.2b Permissible Plate Materials and Allowable Stresses (USC) 5-20
5.3a Thickness of Shell Manhole Cover Plate and Bolting Flange (SI) 5-29
5.3b Thickness of Shell Manhole Cover Plate and Bolting Flange (USC) 5-29
5.4a Dimensions for Shell Manhole Neck Thickness (SI) 5-30
5.4b Dimensions for Shell Manhole Neck Thickness (USC) 5-31
5.5a Dimensions for Bolt Circle Diameter Db and Cover Plate Diameter Dc for Shell Manholes (SI) 5-32
5.5b Dimensions for Bolt Circle Diameter Db and Cover Plate Diameter Dc for Shell Manholes (USC) . . 5-33
5.6a Dimensions for Shell Nozzles (SI) 5-37
5.6b Dimensions for Shell Nozzles (USC) 5-39
5.7a Dimensions for Shell Nozzles: Pipe, Plate, and Welding Schedules (SI) 5-40
5.7b Dimensions for Shell Nozzles: Pipe, Plate, and Welding Schedules (USC) 5-42
5.8a Dimensions for Shell Nozzle Flanges (SI) 5-43
5.8b Dimensions for Shell Nozzle Flanges (USC) 5-44
5.9a Dimensions for Flush-Type Cleanout Fittings (SI) 5-45
5.9b Dimensions for Flush-Type Cleanout Fittings (USC) 5-45
5.10a Minimum Thickness of Cover Plate, Bolting Flange, and Bottom Reinforcing Plate for Flush-Type Cleanout Fittingsf (SI) 5-46
5.10b Minimum Thickness of Cover Plate, Bolting Flange, and Bottom Reinforcing Plate for Flush-Type Cleanout Fittingsf (USC) 5-46
5.11a Thicknesses and Heights of Shell Reinforcing Plates for Flush-Type Cleanout Fittings (SI) 5-47
5.11b Thicknesses and Heights of Shell Reinforcing Plates for Flush-Type Cleanout Fittings (USC) 5-47
5.12a Dimensions for Flush-Type Shell Connections (SI) 5-58
5.12b Dimensions for Flush-Type Shell Connections (USC) 5-59
5.13a Dimensions for Roof Manholes (SI) 5-66
5.13b Dimensions for Roof Manholes (USC) 5-66
5.14a Dimensions for Flanged Roof Nozzles (SI) 5-68
5.14b Dimensions for Flanged Roof Nozzles (USC) 5-69
5.15a Dimensions for Threaded Roof Nozzles (SI) 5-69
5.15b Dimensions for Threaded Roof Nozzles (USC) 5-70
5.16a Dimensions for Drawoff Sumps (SI) 5-74
5.16b Dimensions for Drawoff Sumps (USC) 5-74
5.17 Requirements for Platforms and Walkways 5-75

Page

5.18 Requirements for Stairways 5-75
5.19a Rise, Run, and Angle Relationships for Stairways (SI) 5-76
5.19b Rise, Run, and Angle Relationships for Stairways (USC) 5-76
5.20a Section Moduli (cm^3) of Stiffening-Ring Sections on Tank Shells (SI) 5-81
5.20b Section Moduli ($in.^3$) of Stiffening-Ring Sections on Tank Shells (USC) 5-82
5.21a Uplift Loads (SI) 5-97
5.21b Uplift Loads (USC) 5-98
7.1a (SI) Minimum Preheat Temperatures 7-2
7.1b (USC) Minimum Preheat Temperatures 7-2
A.1a Typical Sizes and Corresponding Nominal Capacities (m^3) for Tanks with 1800-mm Courses (SI) A-2
A.1b Typical Sizes and Corresponding Nominal Capacities (barrels) for Tanks with 72-in. Courses (USC) A-3
A.2a Shell-Plate Thicknesses (mm) for Typical Sizes of Tanks with 1800-mm Courses (SI) A-4
A.2b Shell-Plate Thicknesses (in.) for Typical Sizes of Tanks with 72-in. Courses (USC) A-5
A.3a Typical Sizes and Corresponding Nominal Capacities (m^3) for Tanks with 2400-mm Courses (SI) A-6
A.3b Typical Sizes and Corresponding Nominal Capacities (barrels) for Tanks with 96-in. Courses (USC) A-7
A.4a Shell-Plate Thicknesses (mm) for Typical Sizes of Tanks with 2400-mm Courses (SI) A-8
A.4b Shell-Plate Thicknesses (in.) for Typical Sizes of Tanks with 96-in. Courses (USC) A-9
AL.1 Material Specifications AL-4
AL.2 Joint Efficiency AL-4
AL.3a Minimum Mechanical Properties (SI) AL-5
AL.3b Minimum Mechanical Properties (USC) AL-6
AL.4a Annular Bottom Plate Thickness (SI) AL-8
AL.5a Minimum Shell Thickness (SI) AL-9
AL.5b Minimum Shell Thickness (USC) AL-9
AL.4b Annular Bottom Plate Thickness (USC) AL-9
AL.6a Allowable Tensile Stresses for Tank Shell (for Design and Test) (SI) AL-11
AL.6b Allowable Tensile Stresses for Tank Shell (for Design and Test) (USC) AL-12
AL.7a Allowable Stresses for Roof Plates (SI) AL-17
AL.7b Allowable Stresses for Roof Plates (USC) AL-17
AL.8a Compressive Moduli of Elasticity E (MPa) at Temperature (°C) (SI) AL-19
AL.8b Compressive Moduli of Elasticity E (ksi) at Temperature (°F) (USC) AL-19
AL.9a Shell Nozzle Welding Schedule (SI) AL-20
AL.9b Shell Nozzle Welding Schedule (USC) AL-21
E.1 Value of F_a as a Function of Site Class E-9
E.2 Value of F_v as a Function of Site Class E-9
E.3 Site Classification E-12
E.4 Response Modification Factors for ASD Methods E-15
E.5 Importance Factor (I) and Seismic Use Group Classification E-16
E.6 Anchorage Ratio Criteria E-22
E.8 Design Displacements for Piping Attachments E-27
E.7 Minimum Required Freeboard E-27
G.1a Bolts and Fasteners (SI) G-4
G.1b Bolts and Fasteners (USC) G-5
J.1a Minimum Roof Depths for Shop-Assembled Dome-Roof Tanks (SI) J-2
J.1b Minimum Roof Depths for Shop-Assembled Dome-Roof Tanks (USC) J-3
K.1a Shell-Plate Thicknesses Based on the Variable-Design-Point Method Using 2400-mm Courses and an Allowable Stress of 159 MPa for the Test Condition (SI) K-11

Page

K.1b Shell-Plate Thicknesses Based on the Variable-Design-Point Method Using 96-in. Courses and an Allowable Stress of 23,000 lbf/in.^{2} for the Test Condition (USC) K-12
K.2a Shell-Plate Thicknesses Based on the Variable-Design-Point Method Using 2400-mm Courses and an Allowable Stress of 208 MPa for the Test Condition (SI). K-13
K.2b Shell-Plate Thicknesses Based on the Variable-Design-Point Method Using 96-in. Courses and an Allowable Stress of 30,000 lbf/in.^{2} for the Test Condition (USC) K-14
K.3a Shell-Plate Thicknesses Based on the Variable-Design-Point Method Using 2400-mm Courses and an Allowable Stress of 236 MPa for the Test Condition (SI). K-15
K.3b Shell-Plate Thicknesses Based on the Variable-Design-Point Method Using 96-in. Courses and an Allowable Stress of 34,300 lbf/in.^{2} for the Test Condition (USC) K-16
L.1 Index of Decisions or Actions Which may be Required of the Tank Purchaser. L-28
M.1a Yield Strength Reduction Factors (SI) M-3
M.1b Yield Strength Reduction Factors (USC) M-3
M.2a Modulus of Elasticity at the Maximum Design Temperature (SI) M-6
M.2b Modulus of Elasticity at the Maximum Design Temperature (USC) M-7
O.1a Dimensions of Under-Bottom Connections (SI). O-2
O.1b Dimensions of Under-Bottom Connections (USC). O-2
P.1a Modulus of Elasticity and Thermal Expansion Coefficient at the Design Temperature (SI) P-3
P.1b Modulus of Elasticity and Thermal Expansion Coefficient at the Design Temperature (USC) P-3
S.1a ASTM Materials for Stainless Steel Components (SI) S-2
S.1b ASTM Materials for Stainless Steel Components (USC) S-3
S.2a Allowable Stresses for Tank Shells (SI). S-8
S.2b Allowable Stresses for Tank Shells (USC). S-8
S.3a Allowable Stresses for Plate Ring Flanges (SI) S-9
S.3b Allowable Stresses for Plate Ring Flanges (USC) S-9
S.4 Joint Efficiencies S-10
S.5a Yield Strength Values in MPa (SI). S-10
S.5b Yield Strength Values in psi (USC). S-10
S.6a Modulus of Elasticity at the Maximum Design Temperature (SI) S-11
S.6b Modulus of Elasticity at the Maximum Design Temperature (USC) S-11
U.1a Flaw Acceptance Criteria for UT Indications May be Used for All Materials (SI) U-5
U.1b Flaw Acceptance Criteria for UT Indications May be Used for All Materials (USC) U-6
X.1 ASTM Materials for Duplex Stainless Steel Components X-2
X.2a Allowable Stresses for Tank Shells (SI). X-5
X.2b Allowable Stresses for Tank Shells (USC). X-5
X.3 Joint Efficiencies X-6
X.4a Yield Strength Values in MPa X-7
X.4b Yield Strength Values in PSI X-7
X.5a Modulus of Elasticity at the Maximum Design Temperature (SI) X-8
X.5b Modulus of Elasticity at the Maximum Design Temperature (USC) X-8
X.6a Hot Forming Temperatures (SI) X-9
X.6b Hot Forming Temperatures (USC) X-10

Welded Tanks for Oil Storage

SECTION 1—SCOPE

1.1 General

1.1.1 This standard establishes minimum requirements for material, design, fabrication, erection, and inspection for vertical, cylindrical, aboveground, closed- and open-top, welded storage tanks in various sizes and capacities for internal pressures approximating atmospheric pressure (internal pressures not exceeding the weight of the roof plates), but a higher internal pressure is permitted when additional requirements are met (see 1.1.13). This standard applies only to tanks whose entire bottom is uniformly supported and to tanks in non-refrigerated service that have a maximum design temperature of 93 °C (200 °F) or less (see 1.1.20).

• **1.1.2** This standard is designed to provide industry with tanks of adequate safety and reasonable economy for use in the storage of petroleum, petroleum products, and other liquid products. This standard does not present or establish a fixed series of allowable tank sizes; instead, it is intended to permit the Purchaser to select whatever size tank may best meet his needs. This standard is intended to help Purchasers and Manufacturers in ordering, fabricating, and erecting tanks; it is not intended to prohibit Purchasers and Manufacturers from purchasing or fabricating tanks that meet specifications other than those contained in this standard.

NOTE A bullet (•) at the beginning of a paragraph indicates that there is an expressed decision or action required of the Purchaser. The Purchaser's responsibility is not limited to these decisions or actions alone. When such decisions and actions are taken, they are to be specified in documents such as requisitions, change orders, data sheets, and drawings.

• **1.1.3** This standard has requirements given in two alternate systems of units. The Manufacturer shall comply with either:

1) all of the requirements given in this standard in SI units; or

2) all of the requirements given in this standard in US Customary units.

The selection of which set of requirements (SI or US Customary) to apply shall be a matter of mutual agreement between the Manufacturer and Purchaser and indicated on the Data Sheet, Page 1.

1.1.4 All tanks and appurtenances shall comply with the Data Sheet and all attachments.

• **1.1.5** Field-erected tanks shall be furnished completely erected, inspected, and ready for service connections, unless specified otherwise. Shop-fabricated tanks shall be furnished inspected and ready for installation.

• **1.1.6** The appendices of this standard provide a number of design options requiring decisions by the Purchaser, standard requirements, recommendations, and information that supplements the basic standard. Except for Annex L, an Annex becomes a requirement only when the Purchaser specifies an option covered by that Annex or specifies the entire Annex. See Table 1.1 for the status of each Annex.

1.1.7 Annex A provides alternative simplified design requirements for tanks where the stressed components, such as shell plates and reinforcing plates, are limited to a maximum nominal thickness of 12.5 mm ($^1/_2$ in.), including any corrosion allowance, and whose design metal temperature exceeds the minimums stated in the Annex.

1.1.8 Annex AL provides requirements for aluminum tanks.

1.1.9 Annex B provides recommendations for the design and construction of foundations for flat-bottom oil storage tanks.

Table 1.1—Status of Annexes to API Standard 650

	Annex	Title	Status
	A	Optional Design Basis for Small Tanks	Purchaser's Option
	AL	Aluminum Storage Tanks	Requirements
	B	Recommendations for Design and Construction of Foundations for Aboveground Oil Storage Tanks	Recommendations
•	C	External Floating Roofs	Requirements
	D	Technical Inquiries	Required Procedures
•	E	Seismic Design of Storage Tanks	Purchaser's Option
	EC	Commentary on Annex E	Information
	F	Design of Tanks for Small Internal Pressures	Requirements
•	G	Structurally-Supported Aluminum Dome Roofs	Requirements
	H	Internal Floating Roofs	Requirements
•	I	Undertank Leak Detection and Subgrade Protection	Purchaser's Option
	J	Shop-Assembled Storage Tanks	Requirements
	K	Sample Application of the Variable-Design-Point Method to Determine Shell-Plate Thickness	Information
•	L	API Standard 650 Storage Tank Data Sheets	Required Information
	M	Requirements for Tanks Operating at Elevated Temperatures	Requirements
	N	Use of New Materials That are Not Identified	Requirements
•	O	Recommendation for Under-Bottom Connections	Purchaser's Option
•	P	Allowable External Load on Tank Shell Openings	Purchaser's Option
	S	Austenitic Stainless Steel Storage Tanks	Requirements
	SC	Stainless Steel and Carbon Steel Mixed Material Storage Tanks	Requirements
	T	NDE Requirements Summary	Requirements
	U	Ultrasonic Examination in Lieu of Radiography	Purchaser's Option
•	V	Design of Storage Tanks for External Pressure	Purchaser's Option
•	W	Commercial and Documentation Recommendations	Recommendations
	X	Duplex Stainless Steel Tanks	Requirements
	Y	API Monogram	Requirements

1.1.10 Annex C provides minimum requirements for pontoon-type and double-deck-type external floating roofs.

1.1.11 Annex D provides requirements for submission of technical inquiries regarding this standard.

• **1.1.12** Annex E provides minimum requirements for tanks subject to seismic loading. An alternative or supplemental design may be mutually agreed upon by the Manufacturer and the Purchaser.

1.1.13 Annex F provides requirements for the design of tanks subject to a small internal pressure.

1.1.14 Annex G provides requirements for aluminum dome roofs.

1.1.15 Annex H provides minimum requirements that apply to an internal floating roof in a tank with a fixed roof at the top of the tank shell.

• **1.1.16** Annex I provides acceptable construction details that may be specified by the Purchaser for design and construction of tank and foundation systems that provide leak detection and subgrade protection in the event of tank bottom leakage, and provides for tanks supported by grillage.

1.1.17 Annex J provides requirements covering the complete shop assembly of tanks that do not exceed 6 m (20 ft) in diameter.

1.1.18 Annex K provides a sample application of the variable-design-point method to determine shell-plate thicknesses.

• **1.1.19** Annex L provides the Data Sheet and the Data Sheet instructions for listing required information to be used by the Purchaser and the Manufacturer. The use of the Data Sheet is mandatory, unless waived by the Purchaser.

1.1.20 Annex M provides requirements for tanks with a maximum design temperature exceeding 93 °C (200 °F) but not exceeding 260 °C (500 °F).

1.1.21 Annex N provides requirements for the use of new or unused plate and pipe materials that are not completely identified as complying with any listed specification for use in accordance with this standard.

1.1.22 Annex O provides recommendations for the design and construction of under-bottom connections for storage tanks.

• **1.1.23** Annex P provides requirements for design of shell openings that conform to Table 5-6a and Table 5-6b that are subject to external piping loads. An alternative or supplemental design may be agreed upon by the Purchaser or Manufacturer.

1.1.24 Annex S provides requirements for stainless steel tanks.

1.1.25 Annex SC provides requirements for mixed material tanks using stainless steel (including austenitic and duplex) and carbon steel in the same tank for shell rings, bottom plates, roof structure, and other parts of a tank requiring high corrosion resistance.

1.1.26 Annex T summarizes the requirements for examination by method of examination and the reference sections within the standard. The acceptance standards, inspector qualifications, and procedure requirements are also provided. This Annex is not intended to be used alone to determine the examination requirements within this standard. The specific requirements listed within each applicable section shall be followed in all cases.

1.1.27 Annex U provides requirements covering the substitution of ultrasonic examination in lieu of radiographic examination.

1.1.28 Annex V provides additional requirements for tanks that are designed to operate under external pressure (vacuum) conditions.

1.1.29 Annex W provides recommendations covering commercial and documentation issues. Alternative or supplemental requirements may be mutually agreed upon by the Manufacturer and the Purchaser.

1.1.30 Annex X provides requirements for duplex stainless steel tanks.

1.1.31 Annex Y provides requirements for API Licensees wishing to mark their products with the API Monogram.

1.2 Limitations

The rules of this standard are not applicable beyond the following limits of piping connected internally or externally to the roof, shell, or bottom of tanks constructed according to this standard:

a) The face of the first flange in bolted flanged connections, unless covers or blinds are provided as permitted in this standard.

b) The first sealing surface for proprietary connections or fittings.

c) The first threaded joint on the pipe in a threaded connection to the tank shell.

d) The first circumferential joint in welding-end pipe connections if not welded to a flange.

1.3 Responsibilities

1.3.1 The Manufacturer is responsible for complying with all provisions of this standard. Inspection by the Purchaser's inspector does not negate the Manufacturer's obligation to provide quality control and inspection necessary to ensure such compliance. The Manufacturer shall also communicate specified requirements to relevant subcontractors or suppliers working at the request of the Manufacturer.

1.3.2 The Purchaser shall specify on the Data Sheet, Line 23, the applicable jurisdictional regulations and owner requirements that may affect the design and construction of the tank and those that are intended to limit the evaporation or release of liquid contents from the tank. Which regulations/requirements, if any, apply depend on many factors such as the business unit the tank is assigned to, the vapor pressure of the liquids stored in the tank, the components of the liquid stored in the tank, the geographic location of the tank, the date of construction of the tank, the capacity of the tank, and other considerations. These rules may affect questions such as 1) which tanks require floating roofs and the nature of their construction; 2) the types and details of seals used in the floating roof annular rim space and at openings in the roof, 3) details of tank vents, and 4) requirements regarding release prevention barriers.

1.3.3 The Purchaser shall provide any jurisdictional site permits that may be required to erect the tank(s), including permits for disposal of the hydro-test water. The Manufacturer shall provide all other permits that may be required to complete or transport the tank.

1.3.4 The Purchaser retains the right to provide personnel to observe all shop and job site work within the scope of the contracted work (including testing and inspection). Such individuals shall be afforded full and free access for these purposes, subject to safety and schedule constraints.

1.3.5 In this standard, language indicating that the Purchaser accepts, agrees, reviews, or approves a Manufacturer's design, work process, manufacturing action, etc., shall not limit or relieve the Manufacturer's responsibility to conform to specified design codes, project specifications and drawings, and professional workmanship.

1.3.6 The Manufacturer shall advise the Purchaser of any identified conflicts between this standard and any Purchaser-referenced document and request clarification.

1.3.7 In this standard, language indicating that any particular issue is subject to agreement between the Purchaser and the Manufacturer shall be interpreted to require any such agreement to be documented in writing.

• 1.4 Documentation Requirements

See Annex W and the Data Sheet for the requirements covering the various documents to be developed for the tank.

1.5 Formulas

Where units are not defined in formulas in this standard, use consistent units (for example, in., $in.^2$, $in.^3$, $lbf/in.^2$).

SECTION 2—NORMATIVE REFERENCES

The following referenced documents are indispensable for the application of this document. For dated references, only the edition cited applies. For undated references, the latest edition of the referenced document (including any amendments) applies.

API Recommended Practice 582, *Welding Guidelines for the Chemical, Oil and Gas Industries*

API Standard 620, *Design and Construction of Large, Welded, Low-Pressure Storage Tanks*

API Recommended Practice 651, *Cathodic Protection of Aboveground Petroleum Storage Tanks*

API Recommended Practice 652, *Lining of Aboveground Petroleum Storage Tank Bottoms*

API Publication 937, *Evaluation of the Design Criteria for Storage Tanks with Frangible Roofs*

API Publication 937-A, *Study to Establish Relations for the Relative Strength of API 650 Cone Roof, Roof-to-Shell, and Shell-to-Bottom Joints*

API Standard 2000, *Venting Atmospheric and Low-Pressure Storage Tanks: Non-refrigerated and Refrigerated*

API Recommended Practice 2003, *Protection Against Ignitions Arising Out of Static, Lightning, and Stray Currents*

API Publication 2026, *Safe Access/Egress Involving Floating Roofs of Storage Tanks in Petroleum Service*

API Recommended Practice 2350, *Overfill Protection for Storage Tanks in Petroleum Facilities*

API Specification 5L, *Specification for Line Pipe*

API *Manual of Petroleum Measurements Standards (MPMS)* Chapter 19,"Evaporative Loss Measurement"

AAI [1], *Aluminum Design Manual*

AAI*, Aluminum Standards and Data*

AAI*, Specifications for Aluminum Sheet Metal Work in Building Construction*

ACI 318 [2], *Building Code Requirements for Reinforced Concrete (ANSI/ACI 318)*

ACI 350, *Environmental Engineering Concrete Structures*

AISC [3], *Manual of Steel Construction*

AISI T-192 [4], *Steel Plate Engineering Data, Volume 1 & 2 (Revised Edition – 2011) published jointly by the Steel Market Development Institute and Steel Plate Fabricators Association*

ANSI/AISC 360 [5], *Specification for Structural Steel Buildings*

1 Aluminum Association Inc., 1525 Wilson Blvd, Suite 600, Arlington, Virginia 22209, www.aluminum.org
2 American Concrete Institute, P.O. Box 9094, Farmington Hills, Michigan 48333, www.aci-int.org.
3 American Institute of Steel Construction, One East Wacker Drive, Suite 700, Chicago, Illinois 60601, www.aisc.org.
4 American Iron and Steel Institute, 1540 Connecticut Avenue, NW, Suite 705, Washington, DC 20036, www.steel.org.
5 American National Standards Institute, 25 West 43rd Street, 4th Floor, New York, New York 10036, www.ansi.org.

ASCE Standard 7-05 [6], *Minimum Design Loads for Buildings and Other Structures*

ASCE Standard 7-10, *Minimum Design Loads for Buildings and Other Structures*

ASME B1.20.1 [7], *Pipe Threads, General Purpose (Inch)* (ANSI/ASME B1.20.1)

ASME B16.1, *Cast Iron Pipe Flanges and Flanged Fittings* (ANSI/ASME B16.1)

ASME B16.5, *Pipe Flanges and Flanged Fittings* (ANSI/ASME B16.5)

ASME B16.21, *Nonmetallic Flat Gaskets for Pipe Flanges*

ASME B16.47, *Large Diameter Steel Flanges: NPS 26 Through NPS 60* (ANSI/ASME B16.47)

ASME *Boiler and Pressure Vessel Code*, Section V, "Nondestructive Examination;" Section VIII, "Pressure Vessels," Division 1; and Section IX, "Welding and Brazing Qualifications"

ASNT CP-189 [8], *Standard for Qualification and Certification of Nondestructive Testing Personnel*

ASNT RP SNT-TC-1A, *Personnel Qualification and Certification in Nondestructive Testing*

ASTM A6M/A6 [9], *General Requirements for Rolled Steel Plates, Shapes, Sheet Piling, and Bars for Structural Use*

ASTM A20M/A20, *General Requirements for Steel Plates for Pressure Vessels*

ASTM A27M/A27, *Steel Castings, Carbon, for General Application*

ASTM A36M/A36, *Structural Steel*

ASTM A53, *Pipe, Steel, Black and Hot-Dipped, Zinc-Coated Welded and Seamless*

ASTM A105M/A105, *Forgings, Carbon Steel, for Piping Components*

ASTM A106, *Seamless Carbon Steel Pipe for High-Temperature Service*

ASTM A131M/A131, *Structural Steel for Ships*

ASTM A181M/A181, *Forgings, Carbon Steel, for General-Purpose Piping*

ASTM A182M/A182, *Forged or Rolled Alloy-Steel Pipe Flanges, Forged Fittings, and Valves and Parts for High-Temperature Service*

ASTM A193M/A193, *Alloy-Steel and Stainless Steel Bolting Materials for High-Temperature Service*

ASTM A194M/A194, *Carbon and Alloy Steel Nuts for Bolts for High-Pressure and High-Temperature Service*

ASTM A213M/A213, *Seamless Ferritic and Austenitic Alloy-Steel Boiler, Superheater, and Heat-Exchanger Tubes*

ASTM A216M/A216, *Standard Specifications for Steel Castings for High-Temperature Service*

---

6 American Society of Civil Engineers, 1801 Alexander Bell Dr., Reston, Virginia 20191, www.asce.org.
7 ASME International, 3 Park Avenue, New York, New York 10016-5990, www.asme.org.
8 American Society for Nondestructive Testing, 1711 Arlingate Lane, P.O. Box 28518, Columbus, Ohio 43228, www.asnt.org.
9 ASTM International, 100 Barr Harbor Drive, West Conshohocken, Pennsylvania 19428, www.astm.org.

ASTM A234M/A234, *Piping Fittings of Wrought Carbon Steel and Alloy Steel for Moderate and High-Temperature Service*

ASTM A240M/A240, *Heat-Resisting Chromium and Chromium-Nickel Stainless Steel Plate, Sheet, and Strip for Pressure Vessels*

ASTM A276, *Stainless Steel Bars and Shapes*

ASTM A283M/A283, *Low and Intermediate Tensile Strength Carbon Steel Plates*

ASTM A285M/A285, *Pressure Vessel Plates, Carbon Steel, Low- and Intermediate-Tensile Strength*

ASTM A307, *Carbon Steel Bolts and Studs, 60,000 lbf/in.^{2} Tensile Strength*

ASTM A312M/A312, *Seamless and Welded Austenitic Stainless Steel Pipes*

ASTM A320M/A320, *Alloy Steel Bolting Materials for Low-Temperature Service*

ASTM A333M/A333, *Seamless and Welded Steel Pipe for Low-Temperature Service*

ASTM A334M/A334, *Seamless and Welded Carbon and Alloy-Steel Tubes for Low-Temperature Service*

ASTM A350M/A350, *Forgings, Carbon and Low-Alloy Steel, Requiring Notch Toughness Testing for Piping Components*

ASTM A351M/A351, *Castings, Austenitic, Austenitic-Ferritic (Duplex), for Pressure-Containing Parts*

ASTM A358M/A358, *Electric-Fusion-Welded Austenitic Chromium-Nickel Alloy Steel Pipe for High-Temperature Service*

ASTM A370, *Test Methods and Definitions for Mechanical Testing of Steel Products*

ASTM A380, *Cleaning, Descaling, and Passivation of Stainless Steel Parts, Equipment, and Systems*

ASTM A403M/A403, *Wrought Austenitic Stainless Steel Piping Fittings*

ASTM A420M/A420, *Piping Fittings of Wrought Carbon Steel and Alloy Steel for Low-Temperature Service*

ASTM A479M/A479, *Stainless Steel Bars and Shapes for Use in Boilers and Other Pressure Vessels*

ASTM A480M/A480, *Flat-Rolled Stainless and Heat-Resisting Steel Plate, Sheet, and Strip*

ASTM A516M/A516, *Pressure Vessel Plates, Carbon Steel, for Moderate- and Lower-Temperature Service*

ASTM A524, *Seamless Carbon Steel Pipe for Atmospheric and Lower Temperatures*

ASTM A537M/A537, *Pressure Vessel Plates, Heat-Treated, Carbon-Manganese-Silicon Steel*

ASTM A573M/A573, *Structural Carbon Steel Plates of Improved Toughness*

ASTM A633M/A633, *Normalized High-Strength Low-Alloy Structural Steel*

ASTM A662M/A662, *Pressure Vessel Plates, Carbon-Manganese, for Moderate and Lower Temperature Service*

ASTM A671, *Electric-Fusion-Welded Steel Pipe for Atmospheric and Lower Temperatures*

ASTM A678M/A678, *Quenched and Tempered Carbon-Steel and High-Strength Low-Alloy Steel Plates for Structural Applications*

ASTM A737M/A737, *Pressure Vessel Plates, High-Strength, Low-Alloy Steel*

ASTM A841M/A841, *Standard Specification for Steel Plates for Pressure Vessels, Produced by the Thermo-Mechanical Control Process (TMCP)*

ASTM A924M/A924, *General Requirements for Steel Sheet, Metallic-Coated by the Hot-Dip Process*

ASTM A992M/A992, *Steel for Structural Shapes for Use in Building Framing*

ASTM A1011M/A1011, *Standard Specification for Steel, Sheet and Strip, Hot-Rolled, Carbon, Structural, High-Strength Low-Alloy and High-Strength Low-Alloy with Improved Formability*

ASTM C509, *Cellular Electrometric Preformed Gasket and Sealing Material*

ASTM D3453, *Flexible Cellular Materials—Urethane for Furniture and Automotive Cushioning, Bedding, and Similar Applications*

ASTM E84, *Test Method for Surface Burning Characteristics of Building Materials*

AWS A5.1 [10], *Specification for Carbon Steel Covered Arc-Welding Electrodes (ANSI/AWS A5.1)*

AWS A5.5, *Specification for Low-Alloy Steel Covered Arc-Welding Electrodes (ANSI/AWS A5.5)*

AWS D1.2, *Structural Welding Code—Aluminum (ANSI/AWS D1.2)*

CSA G40.21 [11], *Structural Quality Steels,* Supplement to *National Building Code of Canada*

EN 10025 [12], *Hot Rolled Products of Structural Steels*

ISO 630 [13], *Structural Steels*

NFPA 11 [14], *Standard for Low Expansion Foam*

NFPA 30, *Flammable and Combustible Liquids Code*

PIP STF05501 [15], *Fixed Ladders and Cages Details*

PIP STF05520, *Pipe Railing for Walking and Working Surface Details*

PIP STF05521, *Details for Angle Railings for Walking and Working Surfaces*

[10] American Welding Society, 550 NW LeJeune Road, Miami, Florida 33126, www.aws.org.
[11] Canadian Standards Association, 5060 Spectrum Way, Suite 100, Mississauga, Ontario, L4W 5N6, Canada, www.csa.ca.
[12] European Committee for Standardization, Avenue Marnix 17, B-1000, Brussels, Belgium, www.cen.eu.
[13] International Organization for Standardization, 1, ch. de la Voie-Creuse, Case postale 56, CH-1211, Geneva 20, Switzerland, www.iso.org.
[14] National Fire Protection Association, 1 Batterymarch Park, Quincy, Massachusetts 02169-7471, www.nfpa.org.
[15] Process Industry Practices, 3925 West Braker Lane (R4500), Austin, Texas 78759, www.pip.org.

U.S. EPA [16], 40 *CFR* Part 63, *National Emission Standards for Hazardous Air Pollutants for Source Categories (HON)*

Subpart F, *National Emission Standards for Organic Hazardous Air Pollutants from the Synthetic Organic Chemical Manufacturing Industry*

Subpart G, *National Emission Standards for Organic Hazardous Air Pollutants from the Synthetic Organic Chemical Manufacturing Industry for Process Vents, Storage Vessels, Transfer Operators, and Waste Water*

Subpart H, *National Emission Standards for Organic Hazardous Air Pollutants for Equipment Leaks*

U.S. EPA, 40 *CFR* Part 68, *Chemical Accident Prevention Provisions*

Subpart G, *Risk Management Plan (RMP)*

U.S. EPA,40 *CFR* Part 264, *Standards for Owners and Operators of Hazardous Waste Treatment, Storage, and Disposal Facilities (RCRA)*

Subpart J, *Tank Systems*

U.S. Federal Specifications [17], TT-S-00230C, *Sealing Compound Electrometric Type, Single Component for Caulking, Sealing, and Glazing in Buildings and Other Structures*

U.S. Federal Specifications, ZZ-R-765C, *Rubber, Silicone (General Specification)*

U.S. OSHA [18], 29 *CFR* 1910, *Subpart D: Walking-Working Surfaces*

U.S. OSHA, 29 *CFR* 1910.119, *Process Safety Management of Highly Hazardous Chemicals*

WRC, Bulletin 297 [19], *Local Stresses in Cylindrical Shells Due to External Loadings—Supplement to WRC Bulletin No. 107*

Other Government Document:

Hershfield, D. M. 1961, “Rainfall Frequency Atlas of the United States for Durations from 30 Minutes to 24 Hours and Return Periods from 1 to 100 Years,” *Technical Paper* No. 40, Weather Bureau, U.S. Department of Commerce, Washington, D.C., 115 pp.

[16] U.S. Environmental Protection Agency, Ariel Rios Building, 1200 Pennsylvania Avenue, Washington, DC 20460, www.epa.gov.
[17] Specifications Unit (WFSIS), 7th and D Streets, S.W., Washington, DC 20407.
[18] U.S. Department of Labor, Occupational Safety and Health Administration, 200 Constitution Avenue, NW, Washington, DC 20210, www.osha.gov.
[19] The Welding Research Council, 3 Park Avenue, 27th Floor, New York, New York 10016-5902, www.forengineers.org.

SECTION 3—TERMS AND DEFINITIONS

For the purposes of this document, the following terms and definitions apply.

3.1
centerline-stacked
The mid-thickness centerlines of plates in all shell courses coincide.

3.2
coating
A term that includes protective materials applied to or bonded to tank surfaces, including paint, protective metals (e.g. galvanizing or cadmium plating), adhered plastic or polyolefin materials. Coatings are used for atmospheric, immersion, or vapor-space service.

3.3
contract
The commercial instrument, including all attachments, used to procure a tank.

3.4
corroded thickness
A design condition equal to the nominal thickness less any specified corrosion allowance.

3.5
corrosion allowance
Any additional thickness specified by the Purchaser for corrosion during the tank service life. Refer to 5.3.2.

3.6
design metal temperature
The lowest temperature considered in the design, which, unless experience or special local conditions justify another assumption, shall be assumed to be 8 °C (15 °F) above the lowest one-day mean ambient temperature of the locality where the tank is to be installed. Isothermal lines of lowest one-day mean temperature are shown in Figure 4.2. The temperatures are not related to refrigerated-tank temperatures (see 1.1.1).

3.7
design thickness
The thickness necessary to satisfy tension and compression strength requirements by this standard or, in the absence of such expressions, by good and acceptable engineering practice for specified design conditions, without regard to construction limitations or corrosion allowances.

3.8
double-deck floating roof
The entire roof is constructed of closed-top flotation compartments.

3.9
examiner
A person who performs Nondestructive Examinations (NDE) and is qualified and certified as required in Section 8 for the NDE method performed.

3.10
floating suction line
Internal piping assembly that allows operator to withdraw product from the upper levels of the tank.

3.11
flush-stacked on the inside
The inside surfaces of plates in all shell courses coincide.

3.12
inlet diffusers
Internal fill line piping with impingement plate, baffles, slots, or lateral openings. Diffusers limit splashing and misting of product, prevent product impingement on internal components, and disperse gases introduced into the tank.

3.13
inspector
A representative of an organization who ensures compliance with this standard and is responsible for various quality control and assurance functions as outlined in this standard.

3.14
liner
A protective material used as a barrier but not adhered, nor bonded, to the protected surface. Typically used (1) inside a tank to protect steel, (2) under a tank for leak detection (as a “release prevention barrier”), (3) in a dike yard, or (4) on the dikes as secondary containment. Common examples are sheeting made from lead, rubber, plastic, polyolefin, or geosynthetic clay (bentonite). A liner is not a coating.

3.15
lining
An internal coating that consists of an applied liquid material which dries and adheres to the substrate, or a sheet material that is bonded to the substrate. It is designed for immersion service or vapor-space service. A lining can be reinforced or unreinforced.

3.16
mandatory
Required sections of the standard become mandatory if the standard has been adopted by a Legal Jurisdiction or if the Purchaser and the Manufacturer choose to make reference to this standard on the nameplate or in the Manufacturer’s certification.

3.17
Manufacturer
The party having the primary responsibility to construct the tank (see 1.3 and 10.2).

3.18
maximum design temperature
The highest temperature considered in the design, equal to or greater than the highest expected operating temperature during the service life of the tank.

3.19
nominal thickness
The ordered thickness of the material. This thickness includes any corrosion allowance and is used for determination of PWHT requirements, weld spacing, minimum and maximum thickness limitations, etc.

NOTE The thickness used in the final structure is the nominal thickness plus or minus any tolerance allowed by this standard.

3.20
Purchaser
The owner or the owner’s designated agent, such as an engineering contractor.

3.21
Purchaser's option
A choice to be selected by the Purchaser and indicated on the Data Sheet. When the Purchaser specifies an option covered by an Annex, the Annex then becomes a requirement.

3.22
recommendation
The criteria provide a good acceptable design and may be used at the option of the Purchaser and the Manufacturer.

3.23
requirement
The criteria must be used unless the Purchaser and the Manufacturer agree upon a more stringent alternative design.

3.24
single-deck pontoon floating roof
The outer periphery of the roof consists of closed-top pontoon compartments, with the inner section of the roof constructed of a single deck without flotation means.

3.25
Welding Terms
The terms defined in 3.25.1 through 3.25.21 are commonly used welding terms mentioned in this standard. See 5.1.5.2 for descriptions of fusion-welded joints.

3.25.1
automatic welding
Welding with equipment which performs the welding operation without adjustment of the controls by a welding operator. The equipment may or may not perform the loading and unloading of the work.

3.25.2
backing
The material—metal, weld metal, carbon, granular flux, and so forth—that backs up the joint during welding to facilitate obtaining a sound weld at the root.

3.25.3
base metal
The metal or alloy that is welded or cut.

3.25.4
depth of fusion
The distance that fusion extends into the base metal from the surface melted during welding.

3.25.5
filler metal
Metal or alloy to be added in making a weld.

3.25.6
fusion
The melting together of filler metal and base metal, or the melting of base metal only, which results in coalescence.

3.25.7
heat-affected zone
The portion of the base metal that has not been melted but whose mechanical properties or microstructures have been altered by the heat of welding or cutting.

3.25.8
joint penetration
The minimum depth a groove weld extends from its face into a joint, exclusive of reinforcement.

3.25.9
lap joint
A joint between two overlapping members. An overlap is the protrusion of weld metal beyond the bond at the toe of the weld.

3.25.10
machine welding
Welding with equipment that performs the welding operation under constant observation and control of a welding operator. The equipment may or may not perform the loading and unloading of the work.

3.25.11
manual welding
Welding wherein the entire welding operation is performed and controlled by hand.

3.25.12
oxygen cutting
A group of cutting processes wherein the severing of metals is effected by means of the chemical reaction of oxygen with the base metal at elevated temperatures. In case of oxidation-resistant metals, the reaction is facilitated by the use of a flux.

3.25.13
porosity
The existence of gas pockets or voids in metal.

3.25.14
reinforcement of weld
Weld metal on the face of a groove weld in excess of the metal necessary for the specified weld size.

3.25.15
semiautomatic arc welding
Arc welding with equipment that controls only the filler metal feed. The advance of the welding is manually controlled.

3.25.16
slag inclusion
Nonmetallic solid material entrapped in weld metal or between weld metal and base metal.

3.25.17
undercut
A groove melted into the base metal adjacent to the toe of a weld and left unfilled by weld metal.

3.25.18
weld metal
The portion of a weld that has been melted during welding.

3.25.19
welded joint
A union of two or more members produced by the application of a welding process.

3.25.20
welder
One who performs manual or semiautomatic welding.

3.25.21
welding operator
One who operates automatic or machine welding equipment.

SECTION 4—MATERIALS

4.1 General

4.1.1 Miscellaneous information is contained in 4.1.1.1 through 4.1.1.4.

4.1.1.1 See the Data Sheet for material specifications.

4.1.1.2 Rimmed or capped steels are not permitted.

4.1.1.3 Use of cast iron for any pressure part or any part attached to the tank by welding is prohibited.

- **4.1.1.4** Because of hydrogen embrittlement and toxicity concerns, cadmium-plated components shall not be used without the expressed consent of the Purchaser.

- **4.1.2** Materials used in the construction of tanks shall conform to the specifications listed in this section, subject to the modifications and limitations indicated in this standard. Material produced to specifications other than those listed in this section may be employed, provided that the material is certified to meet all of the requirements of an applicable material specification listed in this standard and the material's use is approved by the Purchaser. The Manufacturer's proposal shall identify the material specifications to be used. When this standard does not address material requirements for miscellaneous items and appurtenances, the Purchaser and/or the Manufacturer shall supply additional material requirements using a supplement to the Data Sheet.

- **4.1.3** When any new or unused plate and pipe material cannot be completely identified by records that are satisfactory to the Purchaser as material conforming to a specification listed in this standard, the material or product may be used in the construction of tanks covered by this standard only if the material passes the tests prescribed in Annex N.

4.1.4 Where materials of construction are used that are certified to two or more material specifications, the material specification chosen for the design calculations shall also be used consistently in the application of all other provisions of this standard. The Purchaser shall be notified of this choice and receive confirmation that the material fully complies with the chosen material specification in all respects.

4.1.5 When a tank is designed to the requirements of this standard using plate material from Group-I through Group-IIIA steels, the tank Manufacturer responsible for any proposed material substitution to use Group-IV through Group-VI steels must do the following.

a) Maintain all of the original design criteria for the lower stress Group-I through Group IIIA steels.

- b) Obtain the prior written approval of the Purchaser.

c) Ensure that all of the design, fabrication, erection, and inspection requirements for the material being substituted will meet the lower stress Group I through Group IIIA specifications for items including but not limited to:

1) material properties and production process methods;

2) allowable stress levels;

3) notch toughness;

4) welding procedures and consumables;

5) thermal stress relief;

6) temporary and permanent attachment details and procedures;

7) nondestructive examinations.

d) Include the pertinent information in the documents provided to the Purchaser, including a certification statement that the substituted material fully complies with 4.1.5 in all respects, and provide all other records covered by the work processes applied to the material such as impact testing, weld procedures, nondestructive examinations, and heat treatments.

4.2 Plates

4.2.1 General

4.2.1.1 Except as otherwise provided for in 4.1, plates shall conform to one of the specifications listed in 4.2.2 through 4.2.6, subject to the modifications and limitations in this standard.

4.2.1.2 Plate for shells, roofs, and bottoms may be ordered on an edge-thickness basis or on a weight (kg/m^2 [lb/ft^2]) basis, as specified in 4.2.1.2.1, 4.2.1.2.2, and 4.2.1.2.3.

4.2.1.2.1 The edge thickness ordered shall not be less than the computed design thickness or the minimum permitted thickness.

4.2.1.2.2 The weight ordered shall be great enough to provide an edge thickness not less than the computed design thickness or the minimum permitted thickness.

4.2.1.2.3 Whether an edge-thickness or a weight basis is used, an underrun not more than 0.3 mm (0.01 in.) from the computed design thickness or the minimum permitted thickness is acceptable.

• **4.2.1.3** All plates shall be manufactured by the open-hearth, electric-furnace, or basic oxygen process. Steels produced by the thermo-mechanical control process (TMCP) may be used, provided that the combination of chemical composition and integrated controls of the steel manufacturing is mutually acceptable to the Purchaser and the Manufacturer, and provided that the specified mechanical properties in the required plate thicknesses are achieved. Copper-bearing steel shall be used if specified by the Purchaser.

4.2.1.4 Shell plates are limited to a maximum thickness of 45 mm (1.75 in.) unless a lesser thickness is stated in this standard or in the plate specification. Plates used as inserts or flanges may be thicker than 45 mm (1.75 in.). Plates, as designated in 4.2.10.1 and thicker than 40 mm (1.5 in.), shall be normalized or quench tempered, killed, made to fine-grain practice, and impact tested.

4.2.1.5 Plate components not listed in 4.2.10.1 (i.e. nonpressure boundary compression components) shall be limited to the maximum thickness as designated by ASTM, CSA, ISO, EN, or other recognized national standard.

4.2.2 ASTM Specifications

Plates that conform to the following ASTM specifications are acceptable as long as the plates are within the stated limitations.

a) ASTM A36M/A36 for plates to a maximum thickness of 40 mm (1.5 in.). None of the specifications for the appurtenant materials listed in Table 1 of ASTM A36M/A36 are considered acceptable for tanks constructed under this standard unless it is expressly stated in this standard that the specifications are acceptable.

b) ASTM A131M/A131, Grade A, for plates to a maximum thickness of 13 mm (0.5 in.); Grade B for plates to a maximum thickness of 25 mm (1 in.); and Grade EH36 for plates to a maximum thickness of 45 mm (1.75 in.) (insert plates and flanges to a maximum thickness of 50 mm [2 in.]).

c) ASTM A283M/A283, Grade C, for plates to a maximum thickness of 25 mm (1 in.).

d) ASTM A285M/A285, Grade C, for plates to a maximum thickness of 25 mm (1 in.).

e) ASTM A516M Grades 380, 415, 450, 485/A516, Grades 55, 60, 65, and 70, for plates to a maximum thickness of 40 mm (1.5 in.) (insert plates and flanges to a maximum thickness of 100 mm [4 in.]).

f) ASTM A537M/A537, Class 1 and Class 2, for plates to a maximum thickness of 45 mm (1.75 in.) (insert plates to a maximum thickness of 100 mm [4 in.]).

g) ASTM A573M Grades 400, 450, 485/A573, Grades 58, 65, and 70, for plates to a maximum thickness of 40 mm (1.5 in.).

h) ASTM A633M/A633, Grades C and D, for plates to a maximum thickness of 45 mm (1.75 in.) (insert plates to a maximum thickness of 100 mm [4.0 in.]).

i) ASTM A662M/A662, Grades B and C, for plates to a maximum thickness of 40 mm (1.5 in.).

j) ASTM A678M/A678, Grade A, for plates to a maximum thickness of 40 mm (1.5 in.) (insert plates to a maximum thickness of 65 mm [2.5 in.]) and Grade B for plates to a maximum thickness of 45 mm (1.75 in.) (insert plates to a maximum thickness of 65 mm [2.5 in.]). Boron additions are not permitted.

k) ASTM A737M/A737, Grade B, for plates to a maximum thickness of 40 mm (1.5 in.).

l) ASTM A841M/A841 Grade A, Class 1 and Grade B, Class 2 for plates to a maximum thickness of 40 mm (1.5 in.) (insert plates to a maximum thickness of 65 mm [2.5 in.]).

4.2.3 CSA Specifications

Plate furnished to CSA G40.21 in Grades 260W/(38W), 300W(44W), and 350W/(50W) is acceptable within the limitations stated below. (If impact tests are required, Grades 260W/[38W], 300W/[44W], and 350W/[50W] are designated as Grades 260WT/[38WT], 300WT/[44WT], and 350WT/[50WT], respectively.) Imperial unit equivalent grades of CSA Specification G40.21, shown in parenthesis, are also acceptable.

a) The W grades may be semi-killed or fully killed.

b) Fully killed steel made to fine-grain practice must be specified when required.

c) Elements added for grain refining or strengthening shall be restricted in accordance with Table 4.1.

d) Plates shall have tensile strengths that are not more than 140 MPa (20 ksi) above the minimum specified for the grade.

e) Grades 260W/(38W) and 300W(44W) are acceptable for plate to a maximum thickness of 25 mm (1 in.) if semi-killed and to a maximum thickness of 40 mm (1.5 in.) if fully killed and made to fine-grain practice.

Grade 350W(50W) is acceptable for plate to a maximum thickness of 45 mm (1.75 in.) (insert plates to a maximum thickness of 100 mm [4 in.]) if fully killed and made to fine-grain practice.

4.2.4 ISO Specifications

Plate furnished to ISO 630 in Grades E275 and E355 is acceptable within the following limitations:

a) Grade E275 in Qualities C and D for plate to a maximum thickness of 40 mm (1.5 in.);

Table 4.1—Maximum Permissible Alloy Content

Alloy	Heat Analysis (%)	Notes
Columbium	0.05	1, 2, 3
Vanadium	0.10	1, 2, 4
Columbium (≤ 0.05 %) plus Vanadium	0.10	1, 2, 3
Nitrogen	0.015	1, 2, 4
Copper	0.35	1, 2
Nickel	0.50	1, 2
Chromium	0.25	1, 2
Molybdenum	0.08	1, 2

NOTE 1 When the use of these alloys or combinations of them is not included in the material specification, their use shall be at the option of the plate producer, subject to the approval of the Purchaser. These elements shall be reported when requested by the Purchaser. When more restrictive limitations are included in the material specification, those shall govern.

NOTE 2 On product analysis, the material shall conform to these requirements, subject to the product analysis tolerances of the specification.

NOTE 3 When columbium is added either singly or in combination with vanadium, it shall be restricted to plates of 13 mm (0.50 in.) maximum thickness unless combined with 0.15 % minimum silicon.

NOTE 4 When nitrogen (≤ 0.015 %) is added as a supplement to vanadium, it shall be reported, and the minimum ratio of vanadium to nitrogen shall be 4:1.

b) Grade E355 in Qualities C and D for plate to a maximum thickness of 45 mm (1.75 in.) (insert plates to a maximum thickness of 50 mm [2 in.]).

4.2.5 EN Specifications

Plate furnished to EN 10025 in Grades S275 and S355 is acceptable within the following limitations:

a) Grade S275 in Qualities J0 and J2 for plate to a maximum thickness of 40 mm (1.5 in.);

b) Grade S355 in Qualities J0, J2 and K2 for plate to a maximum thickness of 45 mm (1.75 in.) [insert plates to a maximum thickness of 50 mm (2 in.)].

• 4.2.6 National Standards

Plates produced and tested in accordance with the requirements of a recognized national standard and within the mechanical and chemical limitations of one of the grades listed in Table 4.2 are acceptable when approved by the Purchaser. The requirements of this group do not apply to the ASTM, CSA, ISO, and EN specifications listed in 4.2.2, 4.2.3, 4.2.4, and 4.2.5. For the purposes of this standard, a *national standard* is a standard that has been sanctioned by the government of the country from which the standard originates.

4.2.7 General Requirements for Delivery

4.2.7.1 The material furnished shall conform to the applicable requirements of the listed specifications but is not restricted with respect to the location of the place of manufacture.

4.2.7.2 This material is intended to be suitable for fusion welding. Welding technique is of fundamental importance, and welding procedures must provide welds whose strength and toughness are consistent with the plate material being joined. All welding performed to repair surface defects shall be done with low-hydrogen welding electrodes compatible in chemistry, strength, and quality with the plate material.

Table 4.2—Acceptable Grades of Plate Material Produced to National Standards (See 4.2.6)

	Mechanical Properties								Chemical Composition			
	Tensile Strength[a]				Minimum Yield Strength[c]		Maximum Thickness		Maximum Percent Carbon		Maximum Percent Phosphorus and Sulfur	
	Minimum[c]		Maximum									
Grade[b]	MPa	ksi	MPa	ksi	MPa	ksi	mm	in.	Heat	Product	Heat	Product
235[d]	360	52	510	74	235	34	20	0.75	0.20	0.24	0.04	0.05
250	400	58	530	77	250	36	40	1.5	0.23	0.27	0.04	0.05
275	430	62	560	81	275	40	40	1.5	0.25	0.29	0.04	0.05

[a] The location and number of test specimens, elongation and bend tests, and acceptance criteria are to be in accordance with the appropriate national standard, ISO standard, or ASTM specification.

[b] Semi-killed or fully killed quality; as rolled or TMCP (20 mm [0.75 in.] maximum when TMCP is used in place of normalized steel), or normalized.

[c] Yield strength ÷ tensile strength ≤ 0.75, based on the minimum specified yield and tensile strength unless actual test values are required by the Purchaser.

[d] Nonrimming only.

4.2.7.3 When specified by the plate purchaser, the steel shall be fully killed. When specified by the plate purchaser, fully killed steel shall be made to fine-grain practice.

4.2.7.4 For plate that is to be made to specifications that limit the maximum manganese content to less than 1.60 %, the limit of the manganese content may be increased to 1.60 % (heat) at the option of the plate producer to maintain the required strength level, provided that the maximum carbon content is reduced to 0.20 % (heat) and the weldability of the plate is given consideration. The material shall be marked “Mod” following the specification listing. The material shall conform to the product analysis tolerances of Table B in ASTM A6M/A6.

4.2.7.5 The use or presence of columbium, vanadium, nitrogen, copper, nickel, chromium, or molybdenum shall not exceed the limitations of Table 4.1 for all Group VI materials (see Table 4.4a and Table 4.4b) and ISO 630, Grade E355.

4.2.8 Heat Treatment of Plates

4.2.8.1 When specified by the plate purchaser, fully killed plates shall be heat treated to produce grain refinement by either normalizing or heating uniformly for hot forming. If the required treatment is to be obtained in conjunction with hot forming, the temperature to which the plates are heated for hot forming shall be equivalent to and shall not significantly exceed the normalizing temperature. If the treatment of the plates is not specified to be done at the plate producer’s plant, testing shall be carried out in accordance with 4.2.8.2.

4.2.8.2 When a plate purchaser elects to perform the required normalizing or fabricates by hot forming (see 4.2.8.1), the plates shall be accepted on the basis of mill tests made on full-thickness specimens heat treated in accordance with the plate purchaser’s order. If the heat-treatment temperatures are not indicated on the contract, the specimens shall be heat treated under conditions considered appropriate for grain refinement and for meeting the test requirements. The plate producer shall inform the plate purchaser of the procedure followed in treating the specimens at the steel mill.

4.2.8.3 On the purchase order, the plate purchaser shall indicate to the plate producer whether the producer shall perform the heat treatment of the plates.

4.2.8.4 The tensile tests shall be performed on each plate as heat treated.

4.2.9 Impact Testing of Plates

•| **4.2.9.1** When required by the Purchaser or by 4.2.10, a set of Charpy V-notch impact specimens shall be taken from plates after heat treatment (if the plates have been heat treated), and the specimens shall fulfill the stated energy requirements. Test coupons shall be obtained adjacent to a tension-test coupon. Each full-size impact specimen shall have its central axis as close to the plane of one-quarter plate thickness as the plate thickness will permit.

4.2.9.2 When it is necessary to prepare test specimens from separate coupons or when plates are furnished by the plate producer in a hot-rolled condition with subsequent heat treatment by the fabricator, the procedure shall conform to ASTM A20.

4.2.9.3 An impact test shall be performed on three specimens taken from a single test coupon or test location. The average value of the specimens (with no more than one specimen value being less than the specified minimum value) shall comply with the specified minimum value. If more than one value is less than the specified minimum value, or if one value is less than two-thirds the specified minimum value, three additional specimens shall be tested, and each of these must have a value greater than or equal to the specified minimum value.

4.2.9.4 The test specimens shall be Charpy V-notch Type A specimens (see ASTM A370), with the notch perpendicular to the surface of the plate being tested.

4.2.9.5 For a plate whose thickness is insufficient to permit preparation of full-size specimens [10 mm × 10 mm (0.394 in. × 0.394 in.], tests shall be made on the largest subsize specimens that can be prepared from the plate. Subsize specimens shall have a width along the notch of at least 80 % of the material thickness.

4.2.9.6 The impact energy values obtained from subsize specimens shall not be less than values that are proportional to the energy values required for full-size specimens of the same material.

4.2.9.7 The testing apparatus, including the calibration of impact machines and the permissible variations in the temperature of specimens, shall conform to ASTM A370 or an equivalent testing apparatus conforming to national standards or ISO standards.

4.2.10 Toughness Requirements

4.2.10.1 The thickness and design metal temperature of all shell plates, shell reinforcing plates, shell insert plates, bottom plates welded to the shell, plates used for manhole and nozzle necks, plate-ring shell-nozzle flanges, blind flanges, and manhole cover plates shall be in accordance with Figure 4.1a and Figure 4.1b. Notch toughness evaluation of plate-ring flanges, blind flanges, and manhole cover plates shall be based on “governing thickness” as defined in 4.5.4.3. In addition, plates more than 40 mm (1.5 in.) thick shall be of killed steel made to fine-grain practice and heat treated by normalizing, normalizing and tempering, or quenching and tempering, and each plate as heat treated shall be impact tested according to 4.2.11.2. Each TMCP A841 plate-as-rolled shall be impact tested. Impact test temperature and required energy shall be in accordance with 4.2.11.2 in lieu of the default temperature and energy given in A841.

4.2.10.2 Subject to the Purchaser’s approval, thermo-mechanical-control-process (TMCP) plates (plates produced by a mechanical-thermal rolling process designed to enhance notch toughness) may alternatively be used where heat treated plates are normally required by 4.2.10.1 because of thickness over 40 mm (1.5 in.). In this case, each TMCP plate-as-rolled shall receive Charpy V-notch impact energy testing in accordance with 4.2.9, 4.2.10, and 4.2.11. When TMCP steels are used, consideration should be given to the service conditions outlined in 5.3.3.

• **4.2.10.3** Plates less than or equal to 40 mm (1.5 in.) thick may be used at or above the design metal temperatures indicated in Figure 4.1a and Figure 4.1b without being impact tested. To be used at design metal temperatures lower than the temperatures indicated in Figure 4.1a and Figure 4.1b, plates shall demonstrate adequate notch toughness in accordance with 4.2.11.3 unless 4.2.11.2 or 4.2.11.4 has been specified by the Purchaser. For heat-treated material

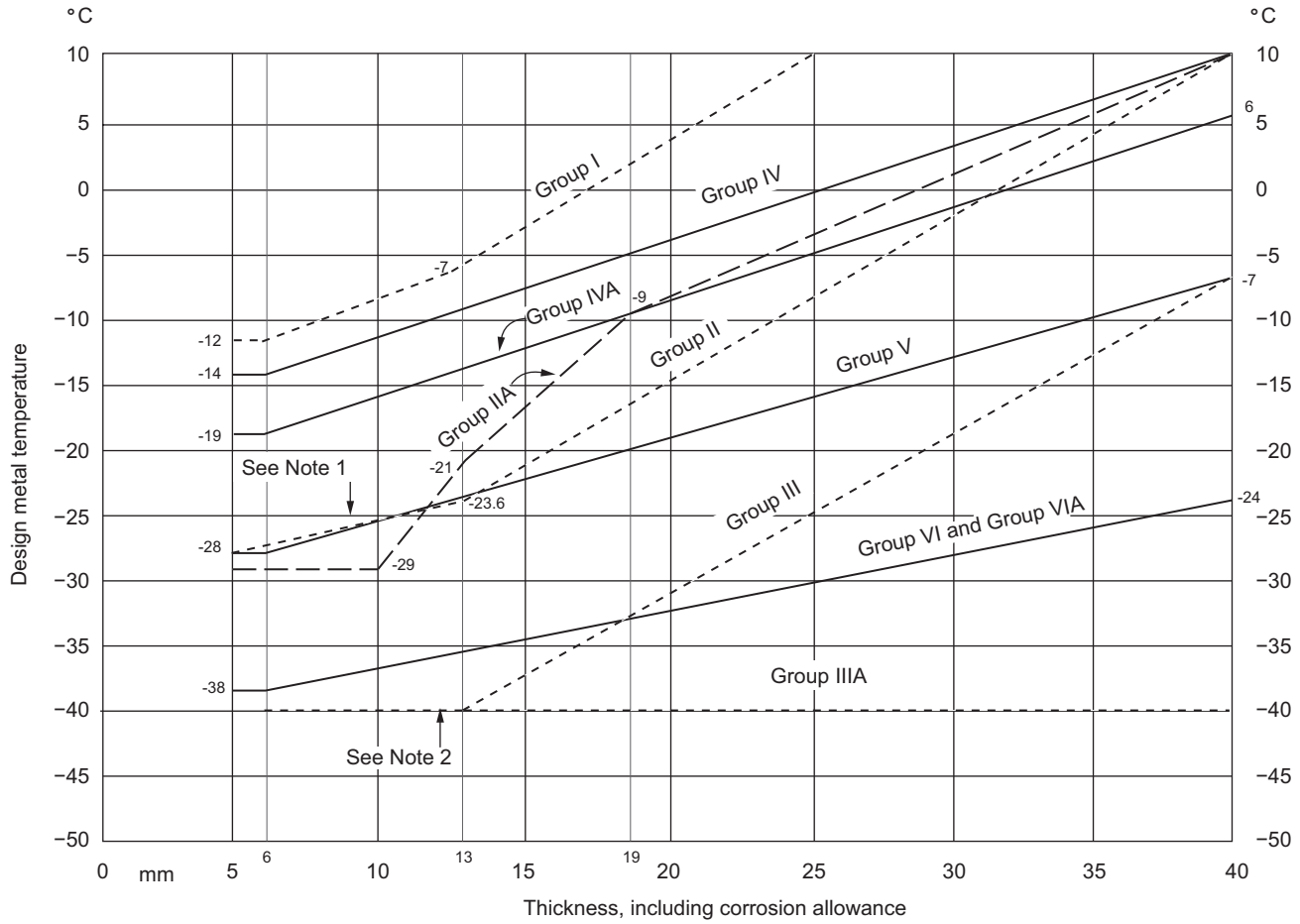

NOTE 1 The Group II and Group V lines coincide at thicknesses less than 13 mm.

NOTE 2 The Group III and Group IIIA lines coincide at thicknesses less than 13 mm.

NOTE 3 The materials in each group are listed in Table 4.4a and Table 4.4b.

NOTE 4 Use the Group IIA and Group VIA curves for pipe and flanges (see 4.5.4.2 and 4.5.4.3).

NOTE 5 Linear equations provided in Table 4.3a can be used to calculate Design Metal Temperature (DMT) for each API material group and the thickness range.

Figure 4.1a—Minimum Permissible Design Metal Temperature for Materials Used in Tank Shells without Impact Testing (SI)

(normalized, normalized and tempered, or quenched and tempered), notch toughness shall be demonstrated on each plate as heat treated when 4.2.11.2 requirements are specified. Isothermal lines of lowest one-day mean temperature are shown in Figure 4.2.

4.2.10.4 Plate used to reinforce shell openings and insert plates shall be of the same material as the shell plate to which they are attached or shall be of any appropriate material listed in Table 4.4a, Table 4.4b, Figure 4.1a, and Figure 4.1b. Except for nozzle and manway necks, the material shall be of equal or greater yield and tensile strength and shall be compatible with the adjacent shell material (see 4.2.10.1 and 5.7.2.3, Item d).

4.2.10.5 The requirements in 4.2.10.4 apply only to shell nozzles and manholes. Materials for roof nozzles and manholes do not require special toughness.

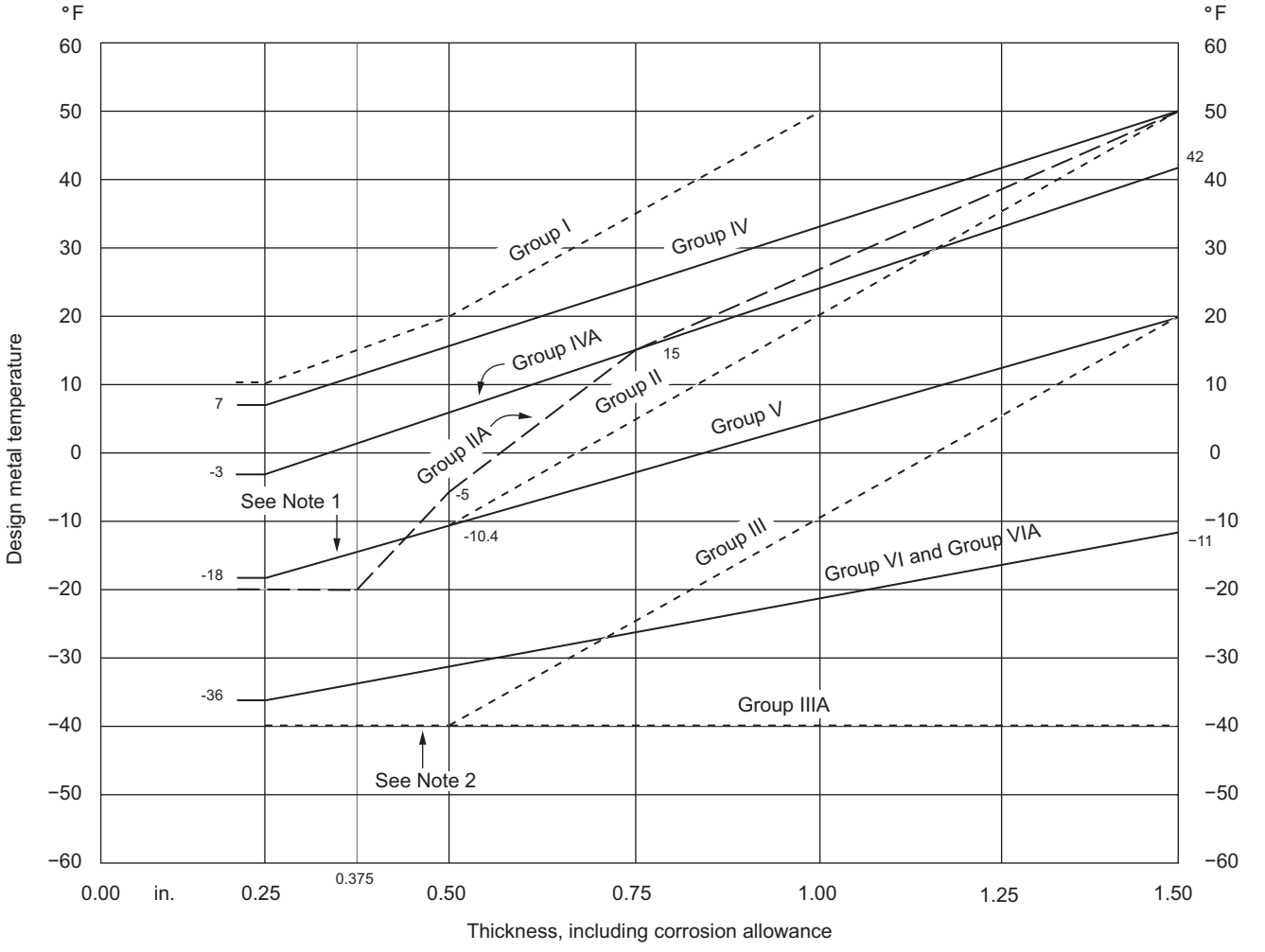

NOTE 1 The Group II and Group V lines coincide at thicknesses less than 1/2 in.

NOTE 2 The Group III and Group IIIA lines coincide at thicknesses less than 1/2 in.

NOTE 3 The materials in each group are listed in Table 4.4a and Table 4.4b.

NOTE 4 Use the Group IIA and Group VIA curves for pipe and flanges (see 4.5.4.2 and 4.5.4.3).

NOTE 5 Linear equations provided in Table 4.3b can be used to calculate Design Metal Temperature (DMT) for each API material group and the thickness range.

Figure 4.1b—Minimum Permissible Design Metal Temperature for Materials Used in Tank Shells without Impact Testing (USC)

4.2.11 Toughness Procedure

4.2.11.1 When a material's toughness must be determined, it shall be done by one of the procedures described in 4.2.11.2, 4.2.11.3, and 4.2.11.4, as specified in 4.2.10.

4.2.11.2 Each plate as rolled or heat treated shall be impact tested in accordance with 4.2.9 at or below the design metal temperature to show Charpy V-notch longitudinal (or transverse) values that fulfill the minimum requirements of Table 4.5a and Table 4.5b (see 4.2.9 for the minimum values for one specimen and for subsize specimens). As used here, the term plate as rolled refers to the unit plate rolled from a slab or directly from an ingot in its relation to the location and number of specimens, not to the condition of the plate.

Table 4.3a—Linear Equations for Figure 4.1a (SI)

API Group #	Thickness Range	Equation
I	$6 \le X < 13$	$Y = 0.714X - 16.286$
I	$13 \le X \le 25$	$Y = 1.417X - 25.417$
II	$6 \le X < 13$	$Y = 0.634X - 31.81$
II	$13 \le X = 40$	$Y = 1.243X - 39.72$
IIA	$10 \le X < 13$	$Y = 2.667X - 55.667$
IIA	$13 \le X \le 19$	$Y = 2X - 47$
IIA	$19 \le X \le 40$	$Y = 0.905X - 26.19$
III	$6 \le X \le 13$	$Y = -40$
III	$13 \le X < 13$	$Y = 1.222X - 55.89$
IIIA	$6 \le X \le 40$	$Y = -40$
IV	$6 \le X \le 40$	$Y = 0.7059X - 18.235$
IVA	$6 \le X \le 40$	$Y = 0.7353X - 23.412$
V	$6 \le \le 40$	$Y = 0.6176X - 31.71$
VI, VIA	$6 \le X \le 40$	$Y = 0.4112X - 40.471$

Y = Design Metal Temperature (°C)

X = Thickness including corrosion (mm)

Table 4.3b—Linear Equations for Figure 4.1b (USC)

API Group #	Thickness Range	Equation
I	$0.25 \le X < 0.5$	$Y = 40X$
I	$0.5 \le X \le 1.0$	$Y = 60X - 10$
II	$0.25 \le X < 0.5$	$Y = 30.4X - 25.6$
II	$0.5 \le X \le 0.75$	$Y = 60.4X - 40.6$
IIA	$0.375 \le X < 0.5$	$Y = 120X - 65$
IIA	$0.5 \le X \le 0.75$	$Y = 80X - 45$
IIA	$0.75 \le X \le 0.15$	$Y = 46.667X - 20$
III	$0.25 \le X < 0.5$	$Y = -40$
III	$0.5 \le X \le 1.5$	$Y = 60X - 70$
IIIA	$0.25 \le X \le 1.5$	$Y = -40$
IV	$0.25 \le X \le 1.5$	$Y = 34.4X - 1.6$
IVA	$0.25 \le X \le 1.5$	$Y = 36X - 12$
V	$0.25 \le X \le 1.5$	$Y = 30.4X - 25.6$
VI, VIA	$0.25 \le X \le 1.5$	$Y = 20X - 41$

Y = Design Metal Temperature (°F)

X = Thickness including corrosion (in.)

4.2.11.3 For plate in the as-rolled condition, the thickest plate from each heat shall be impact tested. For TMCP material, each plate-as-rolled shall be impact tested. Impact testing shall be in accordance with 4.2.9 and shall fulfill the impact requirements of 4.2.11.2 at the design metal temperature.

• **4.2.11.4** The Manufacturer shall submit to the Purchaser test data for plates of the material demonstrating that based on past production from the same mill, the material has provided the required toughness at the design metal temperature.

4.3 Sheets

Sheets for fixed and floating roofs shall conform to ASTM A1011M, Grade 33. They shall be made by the open-hearth or basic oxygen process. Copper-bearing steel shall be used if specified on the purchase order. Sheets may be ordered on either a weight or a thickness basis, at the option of the tank Manufacturer.

4.4 Structural Shapes

4.4.1 Structural steel shall conform to one of the following:

a) ASTM A36M/A36.

b) ASTM A131M/A131.

c) ASTM A992M/A992.

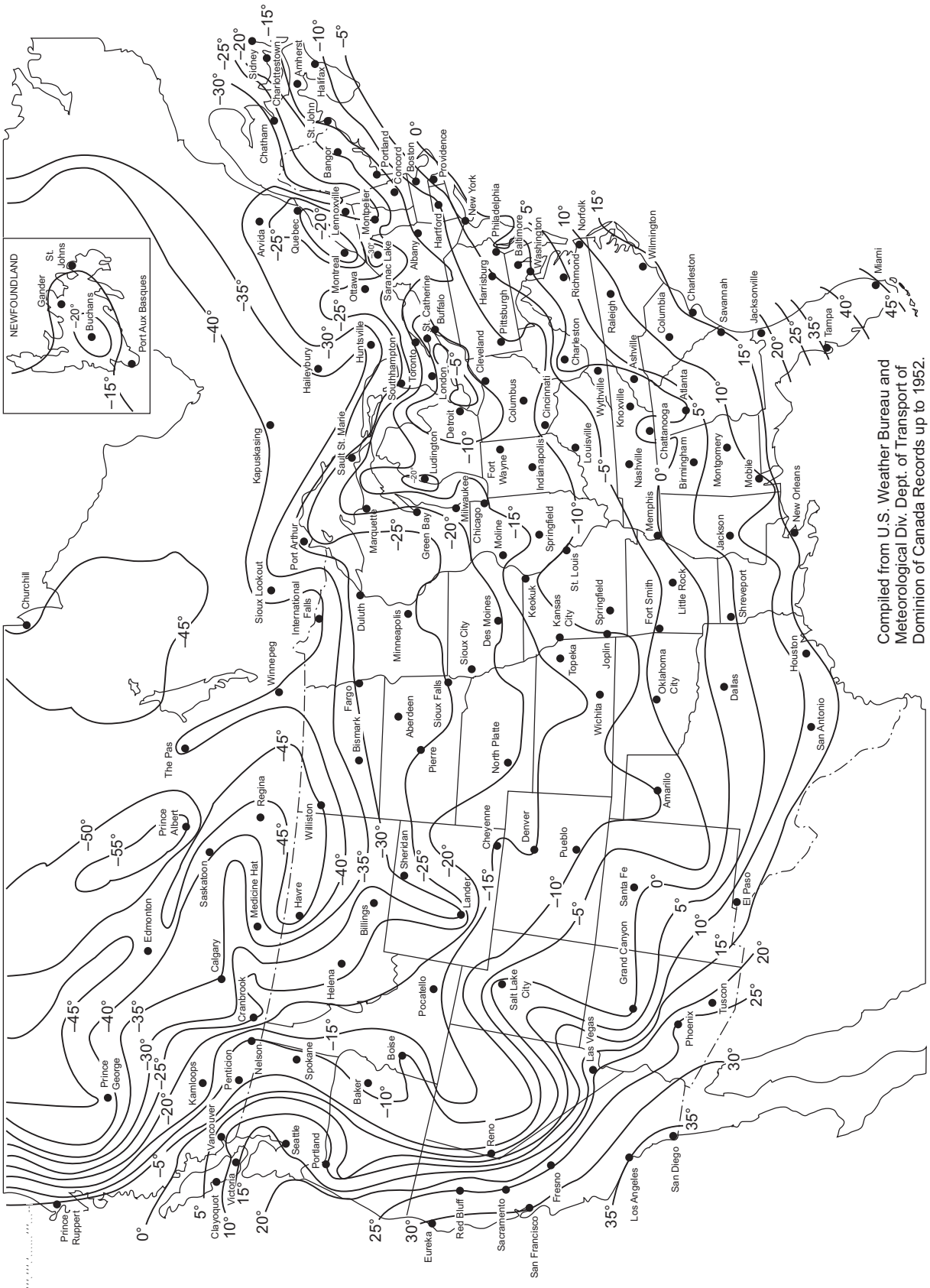

Figure 4.2—Isothermal Lines of Lowest One-Day Mean Temperatures (°F) [°C = (°F – 32)]

Table 4.4a—Material Groups (SI)

(See Figure 4.1a and Note 1 below.)

Group I As Rolled, Semi-Killed		Group II As Rolled, Killed or Semi-Killed		Group III As Rolled, Killed Fine-Grain Practice		Group IIIA Normalized, Killed Fine-Grain Practice	
Material	**Notes**	**Material**	**Notes**	**Material**	**Notes**	**Material**	**Notes**
A283M C	2	A131M B	6	A573M-400		A573M-400	9
A285M C	2	A36M	2, 5	A516M-380		A516M-380	9
A131M A	2	G40.21-260W		A516M-415		A516M-415	9
A36M	2, 3	Grade 250	7	G40.21-260W	8	G40.21-260W	8, 9
Grade 235	3			Grade 250	8	Grade 250	8, 9
Grade 250	5						

Group IV As Rolled, Killed Fine-Grain Practice		Group IVA As Rolled, Killed Fine-Grain Practice		Group V Normalized, Killed Fine-Grain Practice		Group VI Normalized or Quenched and Tempered, Killed Fine-Grain Practice Reduced Carbon	
Material	**Notes**	**Material**	**Notes**	**Material**	**Notes**	**Material**	**Notes**
A573M-450		A662M C		A573M-485	9	A131M EH 36	
A573M-485		A573M-485	10	A516M-450	9	A633M C	
A516M-450		G40.21-300W	8, 10	A516M-485	9	A633M D	
A516M-485		G40.21-350W	8, 10	G40.21-300W	8, 9	A537M Class 1	
A662M B		E275 D		G40.21-350W	8, 9	A537M Class 2	12
G40.21-300W	8	E355 D				A678M A	
G40.21-350W	8	S275 J2	8			A678M B	12
E275 C	8	S355 (J2 or K2)	8			A737M B	
E355 C	8					A841M, Grade A, Class 1	11, 12, 13
S275 J0	8					A841M, Grade B, Class 2	11, 12, 13
S355 J0	8						
Grade 275	8						

NOTES

1. Most of the listed material specification numbers refer to ASTM specifications (including Grade or Class); there are, however, some exceptions: G40.21 (including Grade) is a CSA specification; Grades E275 and E355 (including Quality) are contained in ISO 630; Grades S275 and S355 (including quality) are contained in EN10025; and Grade 235, Grade 250, and Grade 275 are related to national standards (see 4.2.6).
2. Must be semi-killed or killed.
3. Thickness ≤ 20 mm.
4. **Deleted**.
5. Manganese content shall be 0.80 % to 1.2 % by heat analysis for thicknesses greater than 20 mm, except that for each reduction of 0.01 % below the specified carbon maximum, an increase of 0.06 % manganese above the specified maximum will be permitted up to the maximum of 1.35 %. Thicknesses ≤ 20 mm shall have a manganese content of 0.80 % to 1.2 % by heat analysis.
6. Thickness ≤ 25 mm.
7. Must be killed.
8. Must be killed and made to fine-grain practice.
9. Must be normalized.
10. Must have chemistry (heat) modified to a maximum carbon content of 0.20 % and a maximum manganese content of 1.60 % (see 4.2.7.4).
11. Produced by the thermo-mechanical control process (TMCP).
12. See 5.7.4.6 for tests on simulated test coupons for material used in stress-relieved assemblies.
13. See 4.2.10 for impact test requirements (each plate-as-rolled tested).

Table 4.4b—Material Groups (USC)

(See Figure 4.1b and Note 1 below.)

Group I As Rolled, Semi-killed		Group II As Rolled, Killed or Semi-killed		Group III As Rolled, Killed Fine-Grain Practice		Group IIIA Normalized, Killed Fine-Grain Practice	
Material	**Notes**	**Material**	**Notes**	**Material**	**Notes**	**Material**	**Notes**
A283 C	2	A131 B	6	A573-58		A573-58	9
A285 C	2	A36	2, 5	A516-55		A516-55	9
A131 A	2	G40.21-38W		A516-60		A516-60	9
A36	2, 3	Grade 250	7	G40.21-38W	8	G40.21-38W	8, 9
Grade 235	3			Grade 250	8	Grade 250	8, 9
Grade 250	5						

Group IV As Rolled, Killed Fine-Grain Practice		Group IVA As Rolled, Killed Fine-Grain Practice		Group V Normalized, Killed Fine-Grain Practice		Group VI Normalized or Quenched and Tempered, Killed Fine-Grain Practice Reduced Carbon	
Material	**Notes**	**Material**	**Notes**	**Material**	**Notes**	**Material**	**Notes**
A573-65		A662 C		A573-70	9	A131 EH 36	
A573-70		A573-70	10	A516-65	9	A633 C	
A516-65		G40.21-44W	8, 10	A516-70	9	A633 D	
A516-70		G40.21-50W	8, 10	G40.21-44W	8, 9	A537 Class 1	
A662 B		E275 D		G40.21-50W	8, 9	A537 Class 2	12
G40.21-44W	8	E355 D				A678 A	
G40.21-50W	8	S275 J2	8			A678 B	12
E275 C	8	S355 (J2 or K2)	8			A737 B	
E355 C S275 J0 S355 J0	8 8 8					A841, Grade A, Class 1 A841, Grade B, Class 2	11, 12, 13 11, 12, 13
Grade 275	8						

NOTES

1. Most of the listed material specification numbers refer to ASTM specifications (including Grade or Class); there are, however, some exceptions: G40.21 (including Grade) is a CSA specification; Grades E275 and E355 (including Quality) are contained in ISO 630; Grades S275 and S355 (including quality) are contained in EN10025; and Grade 235, Grade 250, and Grade 275 are related to national standards (see 4.2.6).
2. Must be semi-killed or killed.
3. Thickness ≤ 0.75 in.
4. **Deleted**.
5. Manganese content shall be 0.80% to 1.2 % by heat analysis for thicknesses greater than 0.75 in., except that for each reduction of 0.01 % below the specified carbon maximum, an increase of 0.06 % manganese above the specified maximum will be permitted up to the maximum of 1.35 %. Thicknesses ≤ 0.75 in. shall have a manganese content of 0.80 % to 1.2 % by heat analysis.
6. Thickness ≤ 1 in.
7. Must be killed.
8. Must be killed and made to fine-grain practice.
9. Must be normalized.
10. Must have chemistry (heat) modified to a maximum carbon content of 0.20% and a maximum manganese content of 1.60 % (see 4.2.7.4).
11. Produced by the thermo-mechanical control process (TMCP).
12. See 5.7.4.6 for tests on simulated test coupons for material used in stress-relieved assemblies.
13. See 4.2.10 for impact test requirements (each plate-as-rolled tested).

Table 4.5a—Minimum Impact Test Requirements for Plates (SI) (See Note)

Plate Material[a] and Thickness (t) in mm	Thickness	Average Impact Value of Three Specimens[b]	
		Longitudinal	Transverse
	mm	J	J
Groups I, II, III, and IIIA $t \le$ maximum thicknesses in 4.2.2 through 4.2.5		20	18
Groups IV, IVA, V, and VI (except quenched and tempered and TMCP)	$t \le 40$	41	27
	$40 < t \le 45$	48	34
	$45 < t \le 50$	54	41
	$50 < t \le 100$	68	54
Group VI (quenched and tempered and TMCP)	$t \le 40$	48	34
	$40 < t \le 45$	54	41
	$45 < t \le 50$	61	48
	$50 < t \le 100$	68	54

[a] See Table 4.4a.

[b] Interpolation is permitted to the nearest joule.

NOTE For plate ring flanges, the minimum impact test requirements for all thicknesses shall be those for $t \le 40$ mm.

Table 4.5b—Minimum Impact Test Requirements for Plates (USC) (See Note)

Plate Material[a] and Thickness (t) in Inches	Thickness	Average Impact Value of Three Specimens[b]	
		Longitudinal	Transverse
	in.	ft-lbf	ft-lbf
Groups I, II, III, and IIIA $t \le$ maximum thicknesses in 4.2.2 through 4.2.5		15	13
Groups IV, IVA, V, and VI (except quenched and tempered and TMCP)	$t \le 1.5$	30	20
	$1.5 < t \le 1.75$	35	25
	$1.75 < t \le 2$	40	30
	$2 < t \le 4$	50	40
Group VI (quenched and tempered and TMCP)	$t \le 1.5$	35	25
	$1.5 < t \le 1.75$	40	30
	$1.75 < t \le 2$	45	35
	$2 < t \le 4$	50	40

[a] See Table 4.4b.

[b] Interpolation is permitted to the nearest ft-lbf.

NOTE For plate ring flanges, the minimum impact test requirements for all thicknesses shall be those for $t \le 1.5$ in.

d) Structural Steels listed in AISC, *Manual of Steel Construction.*

e) CSA G40.21, Grades 260W(38W), 300W(44W), 350W(50W), 260WT(38WT), 300WT(44WT), and 350WT(50WT). Imperial unit equivalent grades of CSA Specification G40.21, shown in parenthesis, are also acceptable.

f) ISO 630, Grade E275, Qualities B, C, and D.

g) EN 10025, Grade S275, Qualities JR, J0, and J2.

h) Recognized national standards. Structural steel that is produced in accordance with a recognized national standard and that meets the requirements of Table 4.2 is acceptable when approved by the Purchaser.

4.4.2 All steel for structural shapes shall be made by the open-hearth, electric-furnace, or basic oxygen process. Copper-bearing steel is acceptable when approved by the Purchaser.

4.4.3 Not all of the structural steel shapes listed in AISC (4.4.1 [d]) and other national standards (4.4.1[h]) are well suited for welding. Material selection for structural shapes requiring welded connections shall include confirmation of the material's weldability from the structural shape Manufacturer, other reputable sources, or by weld testing. Structural steel shapes having poor weldability shall only be used for bolted connection designs.

4.4.4 Weldable-quality pipe that conforms to the physical properties specified in any of the standards listed in 4.5.1 may be used for structural purposes with the allowable stresses stated in 5.10.3.

4.5 Piping and Forgings

4.5.1 Unless otherwise specified in this standard, pipe and pipe couplings and forgings shall conform to the specifications listed in 4.5.1.1 and 4.5.1.2 or to national standards equivalent to the specifications listed.

4.5.1.1 The following specifications are acceptable for pipe and pipe couplings:

a) API Spec 5L, Grades A, B, and X42;

b) ASTM A53M/A53, Grades A and B;

c) ASTM A106 M/A106, Grades A and B;

d) ASTM A234M/A234, Grade WPB;

e) ASTM A333M/A333, Grades 1 and 6;

f) ASTM A334M/A334, Grades 1 and 6;

g) ASTM A420M/A420, Grade WPL6;

h) ASTM A524, Grades I and II;

i) ASTM A671 (see 4.5.3).

4.5.1.2 The following specifications are acceptable for forgings:

a) ASTM A105M/A105;

b) ASTM A181M/A181;

c) ASTM A350M/A350, Grades LF1 and LF2.

4.5.2 Unless ASTM A671 pipe is used (electric-fusion-welded pipe) (see 4.5.3), material for shell nozzles and shell manhole necks shall be seamless pipe, seamless forging, or plate material as specified in 4.2.10.1. When shell materials are Group IV, IVA, V, or VI, seamless pipe shall comply with ASTM A106, Grade B; ASTM A524; ASTM A333M/A333, Grade 6; or ASTM A334M/A334, Grade 6.

4.5.3 When ASTM A671 pipe is used for shell nozzles and shell manhole necks, it shall comply with the following.

a) Material selection shall be limited to Grades CA 55, CC 60, CC 65, CC 70, CD 70, CD 80, CE 55, and CE 60.

b) The pipe shall be pressure tested in accordance with 8.3 of ASTM A671.

c) The plate specification for the pipe shall satisfy the requirements of 4.2.7, 4.2.8, and 4.2.9 that are applicable to that plate specification.

d) Impact tests for qualifying the welding procedure for the pipe longitudinal welds shall be performed in accordance with 9.2.2.

4.5.4 Except as covered in 4.5.3, the toughness requirements of pipe and forgings to be used for shell nozzles and manholes shall be established as described in 4.5.4.1, 4.5.4.2, 4.5.4.3, and 4.5.4.4.

4.5.4.1 Piping materials made according to ASTM A333M/A333, A334M/A334, A350M/A350, and A420, Grade WPL6 may be used at a design metal temperature no lower than the impact test temperature required by the ASTM^{07} specification for the applicable material grade without additional impact tests (see 4.5.4.4).

4.5.4.2 Other pipe and forging materials shall be classified under the material groups shown in Figure 4.1a and Figure 4.1b as follows:

a) Group IIA—API Spec 5L, Grades A, B, and X42; ASTM A106M/A106, Grades A and B; ASTM A53M/A53, Grades A and B; ASTM A181M/A181; ASTM A105M/A105; and A234M/A234, Grade WPB;

b) Group VIA—ASTM A524, Grades I and II.

4.5.4.3 The materials in the groups listed in 4.5.4.2 may be used at nominal thicknesses, including corrosion allowance, at a design metal temperature no lower than those shown in Figure 4.1a and Figure 4.1b without impact testing (see 4.5.4.4 and Figure 4.3). The governing thicknesses to be used in Figures 4.1a and Figure 4.1b shall be as follows:

a) for butt-welded joints, the nominal thickness of the thickest welded joint;

b) for corner or lap welds, the thinner of the two parts joined;

c) for nonwelded parts such as bolted blind flanges and manhole covers, $^1/_4$ of their nominal thickness.

4.5.4.4 When impact tests are required by 4.5.4.1 or 4.5.4.3, they shall be performed in accordance with the requirements, including the minimum energy requirements, of ASTM A333M/A333, Grade 6, for pipe or ASTM A350M/A350, Grade LF1, for forgings at a test temperature no higher than the design metal temperature. Except for the plate specified in 4.2.9.2, the materials specified in 4.5.1 and 4.5.2 for shell nozzles, shell manhole necks, and all forgings used on shell openings shall have a minimum Charpy V-notch impact strength of 18 J (13 ft-lbf) (full-size specimen) at a temperature no higher than the design metal temperature.

4.6 Flanges

• **4.6.1** Slip on, ring-type, welding neck, long welding neck and lap joint flanges shall conform to the material requirements of ASME B16.5 for forged carbon steel flanges. Plate material used for nozzle flanges shall have

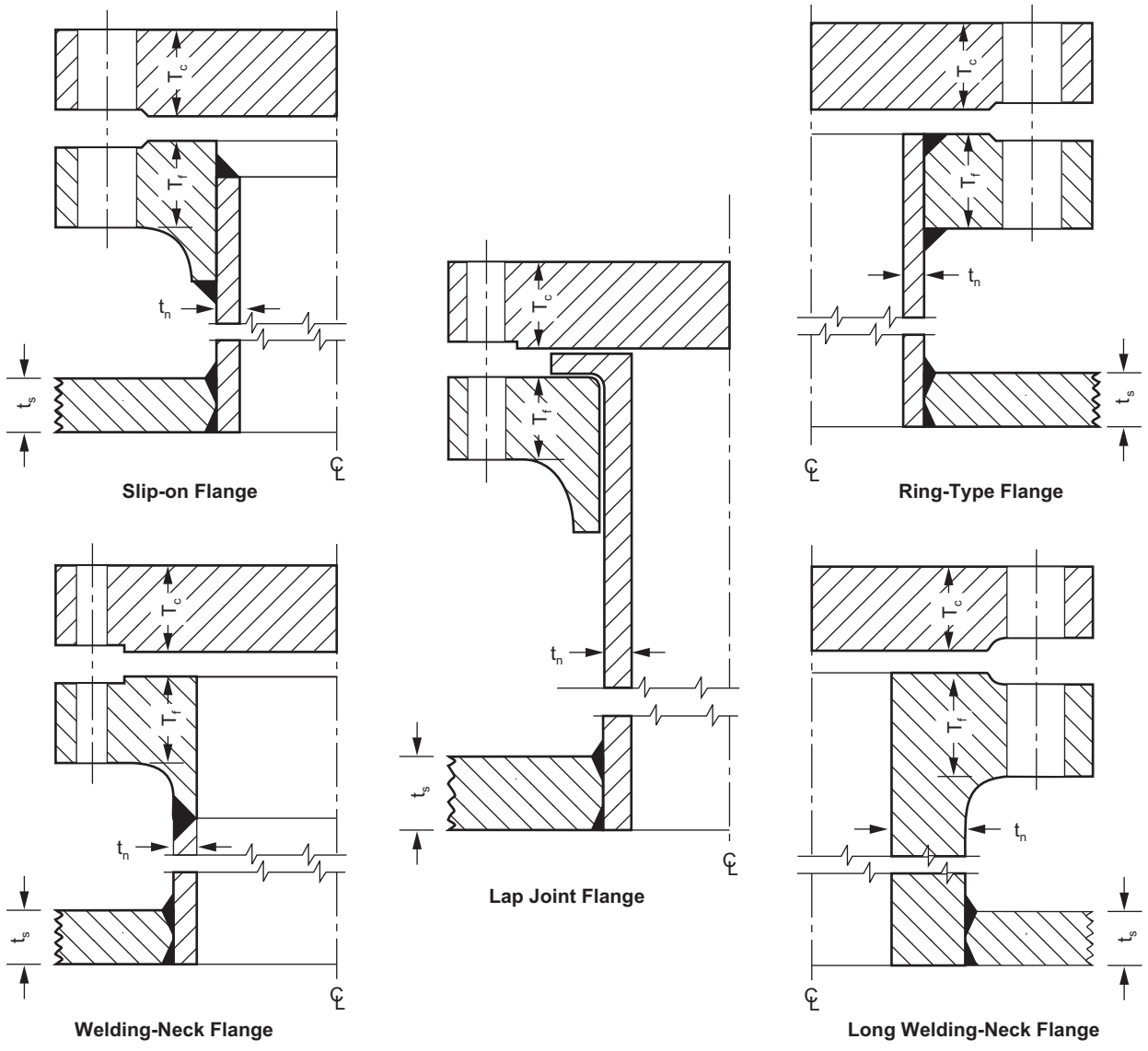

NOTE 1 Shell reinforcing plate is not included in these illustrations.

NOTE 2 t_s = shell thickness; t_n = nozzle neck thickness; T_f = flange thickness; T_c = bolted cover thickness.

NOTE 3 The governing thickness for each component shall be as follows:

Components	Governing Thickness (thinner of)
Nozzle neck at shell	t_n or t_s
Slip-on flange and nozzle neck	t_n or T_f
Ring-type flange and nozzle neck	t_n or T_f
Welding-neck flange and nozzle neck	t_n
Long welding-neck flange	t_n or t_s
Nonwelded bolted cover	$^1/_4$ T_c
Lap-type joint flange	t_n or T_f

Figure 4.3—Governing Thickness for Impact Test Determination of Shell Nozzle and Manhole Materials (see 4.5.4.3)

physical properties better than or equal to those required by ASME B16.5. Shell-nozzle flange material shall conform to 4.2.10.1 and 4.2.10.2. Lap joint flanges shall not be used without the approval of the Purchaser.

• **4.6.2** For nominal pipe sizes greater than NPS 24, flanges that conform to ASME B16.47, Series B, may be used, subject to the Purchaser's approval. Particular attention should be given to ensuring that mating flanges of appurtenances are compatible.

4.7 Bolting

• a) Unless otherwise specified on the Data Sheet, Table 2, flange bolting shall conform to ASTM A193 B7 and the dimensions specified in ASME B18.2.1. Nuts shall conform to ASTM A194 Grade 2H and the dimensions specified in ASME B18.2.2. Both shall be heavy hex pattern. All bolts and nuts shall be threaded in accordance with ASME B1.13M (SI), or with ASME B1.1(US) as follows:

1) bolts up to and including 1 in. diameter: UNC Class 2A fit

2) nuts for bolts up to and including 1 in. diameter: UNC Class 2B fit

3) bolts 1.125 in. diameter and larger: 8N Class 2A fit

4) nuts for bolts 1.125 in. diameter and larger: 8N Class 2B fit

• b) Unless otherwise specified on the Data Sheet, Table 2, anchors shall be one of the following:

1) round bar to ASTM A36, threaded and galvanized;

2) bolts to ASTM F1554, Grade 36, galvanized.

Nuts for anchors shall be galvanized heavy hex. Welding is not permitted on anchors that are galvanized.

• c) All other bolting shall conform to ASTM A307 or A193M/A193. A325M/A325 may be used for structural purposes only. The Purchaser should specify on the order what shape of bolt heads and nuts is desired and whether regular or heavy dimensions are desired.

4.8 Welding Electrodes

4.8.1 For the welding of materials with a minimum tensile strength less than 550 MPa (80 ksi), the manual arc-welding electrodes shall conform to the E60 and E70 classification series (suitable for the electric current characteristics, the position of welding, and other conditions of intended use) in AWS A5.1 and shall conform to 7.2.1.10 as applicable.

4.8.2 For the welding of materials with a minimum tensile strength of 550 MPa to 585 MPa (80 ksi to 85 ksi), the manual arc-welding electrodes shall conform to the E80XX-CX classification series in AWS A5.5.

4.9 Gaskets

4.9.1 General

• **4.9.1.1** Gasket materials shall be specified in Table 3 on the Data Sheet. Unless otherwise specified by the Purchaser, gasket materials shall not contain asbestos.

4.9.1.2 Sheet gaskets shall be continuous. Metal gaskets made continuous by welding are acceptable if the weld is ground flush and finished the same as the unwelded portion of the gasket. Rope or tape gaskets shall have overlapped ends.

4.9.1.3 Each gasket shall be made with an integral centering or positioning device.

• **4.9.1.4** No joint sealing compound, gasket adhesive, adhesive positioning tape, or lubricant shall be used on the sealing surfaces of gaskets, or flanges during joint make-up unless specifically allowed by the Purchaser. When these materials are approved by the Purchaser, consideration should be given to chemical compatibility with the gasket and flange materials.

• **4.9.1.5** Spare gaskets are not required unless specified in the Data Sheet, Line 23.

4.9.2 Service

• When service gaskets are designated to be furnished by the Manufacturer, the gaskets provided shall be as specified in the Data Sheet, Table 3.

4.9.3 Test

• **4.9.3.1** Test gaskets must have comparable dimensions and compressibility characteristics as service gaskets. Descriptions of gaskets for temporary use only as test gaskets shall be submitted for Purchaser's approval.

4.9.3.2 For joints that will not be disassembled after testing, the test gasket must be the specified service gasket.

4.9.3.3 Except for stainless steel bolting, flange bolts and nuts used for testing are acceptable for use in the completed tank.

SECTION 5—DESIGN

5.1 Joints

5.1.1 Definitions

The definitions in 5.1.1.1 through 5.1.1.8 apply to tank joint designs. (See 9.1 for definitions that apply to welders and welding procedures. See Section 3 for additional definitions.)

5.1.1.1
butt-weld
A weld placed in a groove between two abutting members. Grooves may be square, V-shaped (single or double), or U-shaped (single or double), or they may be either single or double beveled.

5.1.1.2
double-welded butt joint
A joint between two abutting parts lying in approximately the same plane that is welded from both sides.

5.1.1.3
double-welded lap joint
A joint between two overlapping members in which the overlapped edges of both members are welded with fillet welds.

5.1.1.4
fillet weld
A weld of approximately triangular cross-section that joins two surfaces at approximately right angles, as in a lap joint, tee joint, or corner joint.

5.1.1.5
full-fillet weld
A fillet weld whose size is equal to the thickness of the thinner joined member.

5.1.1.6
single-welded butt joint with backing
A joint between two abutting parts lying in approximately the same plane that is welded from one side only with the use of a strip bar or another suitable backing material.

5.1.1.7
single-welded lap joint
A joint between two overlapping members in which the overlapped edge of one member is welded with a fillet weld.

5.1.1.8
tack weld
A weld made to hold the parts of a weldment in proper alignment until the final welds are made.

5.1.2 Weld Size

5.1.2.1 The size of a groove weld shall be based on the joint penetration (that is, the depth of chamfering plus the root penetration when specified).

5.1.2.2 The size of an equal-leg fillet weld shall be based on the leg length of the largest isosceles right triangle that can be inscribed within the cross-section of the fillet weld. The size of an unequal-leg fillet weld shall be based on the leg lengths of the largest right triangle that can be inscribed within the cross-section of the fillet weld.

5.1.3 Restrictions on Joints

5.1.3.1 Restrictions on the type and size of welded joints are given in 5.1.3.2 through 5.1.3.8.

5.1.3.2 Tack welds shall not be considered as having any strength value in the finished structure.

5.1.3.3 The minimum size of fillet welds shall be as follows: On plates 5 mm ($^3/_{16}$ in.) thick, the weld shall be a full-fillet weld, and on plates more than 5 mm ($^3/_{16}$ in.) thick, the weld thickness shall not be less than one-third the thickness of the thinner plate at the joint and shall be at least 5 mm ($^3/_{16}$ in.).

5.1.3.4 Single-welded lap joints are permissible only on bottom plates and roof plates.

5.1.3.5 Lap-welded joints, as tack-welded, shall be lapped at least five times the nominal thickness of the thinner plate joined; however, with double-welded lap joints, the lap need not exceed 50 mm (2 in.), and with single-welded lap joints, the lap need not exceed 25 mm (1 in.).

5.1.3.6 Weld passes are restricted as follows:

• **5.1.3.6.1** For bottom plate welds and roof plate welds for all materials, and for shell-to-bottom welds for Groups I, II, III, and IIIA materials, the following weld size requirements apply:

a) For manual welding processes, fillet weld legs or groove weld depths greater than 6 mm ($^1/_4$ in.) shall be multipass, unless otherwise specified on the Data Sheet, Line 15.

b) For semi-automatic, machine, and automatic welding processes, with the exception for electro-gas welding in 7.2.3.4, fillet weld legs or groove weld depths greater than 10 mm ($^3/_8$ in.) shall be multipass, unless otherwise specified on the Data Sheet, Line 15.

5.1.3.6.2 For Groups IV, IVA, V, or VI shell-to-bottom welds for all welding processes, all welds shall be made using a minimum of two passes.

5.1.3.7 Attachments to tank exterior surfaces shall be as follows.

a) Except as provided in item b. below, all attachments to tank exterior surfaces shall be completely seal welded (no intermittent welding) to minimize rust streaking.

b) If specified on the Data Sheet, intermittent welding is permitted for:

1) wind girders as described in 5.1.5.8;

2) attachments to surfaces that will be covered by insulation;

3) attachments to surfaces of corrosion-resistant materials, including but not limited to stainless steel (See Annex S and Annex X) and aluminum (See Annex AL).

• **5.1.3.8** Except as permitted in 5.1.5.5 and 5.1.5.6, permanent weld joint backing strips are permitted only with the approval of the Purchaser.

5.1.4 Welding Symbols

Welding symbols used on drawings shall be the symbols of the American Welding Society.

5.1.5 Typical Joints

5.1.5.1 General

a) Typical tank joints are shown in Figure 5.1, Figure 5.2, Figure 5.3a, Figure 5.3b, and Figure 5.3c.

b) The top surfaces of bottom welds (butt-welded annular plates, butt-welded sketch plates, or Figure 5.3b joints) shall be ground flush where they will contact the bottoms of the shell, insert plates, or reinforcing plates.

5.1.5.2 Vertical Shell Joints

a) Vertical shell joints shall be butt joints with complete penetration and complete fusion attained by double welding or other means that will obtain the same quality of deposited weld metal on the inside and outside weld surfaces to meet the requirements of 7.2.1 and 7.2.3. The suitability of the plate preparation and welding procedure shall be determined in accordance with 9.2.

b) Vertical joints in adjacent shell courses shall not be aligned, but shall be offset from each other a minimum distance of 5t, where t is the plate thickness of the thicker course at the point of offset.

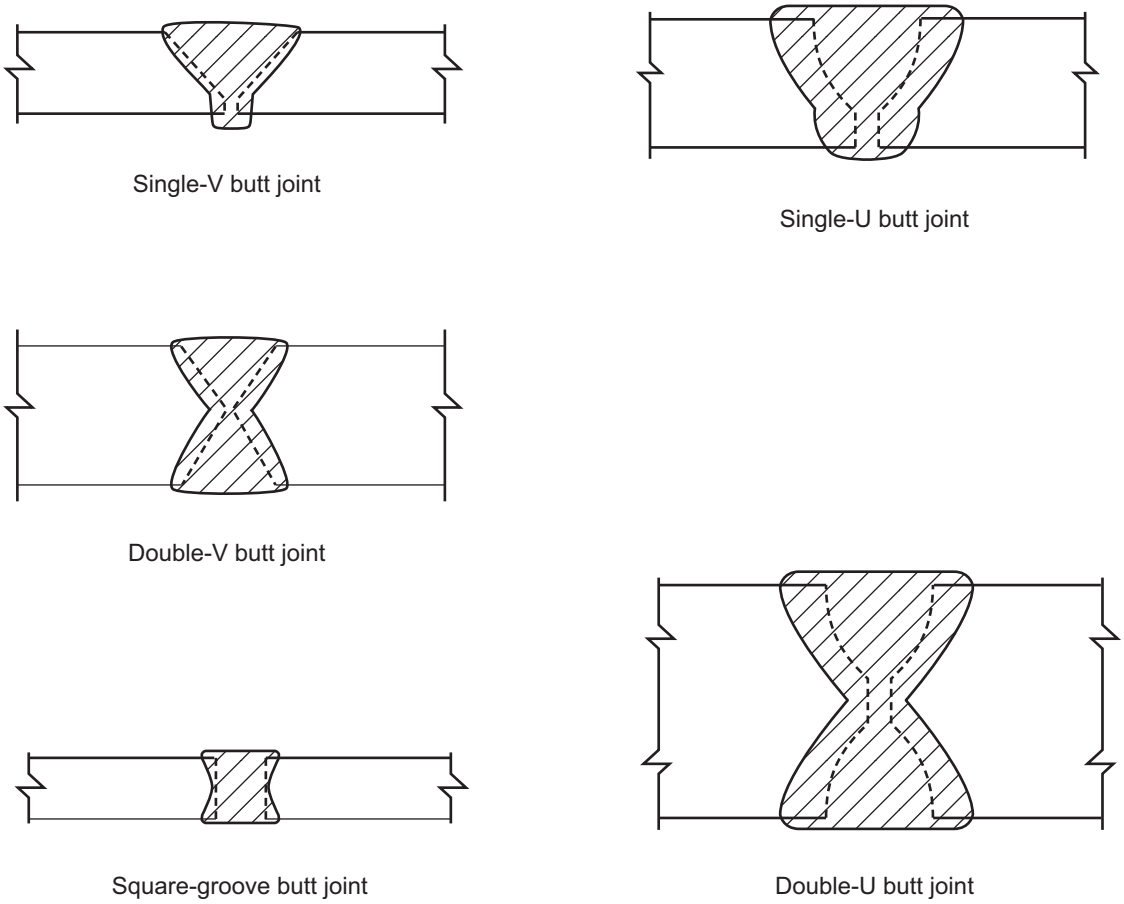

NOTE See 5.1.5.2 for specific requirements for vertical shell joints.

Figure 5.1—Typical Vertical Shell Joints

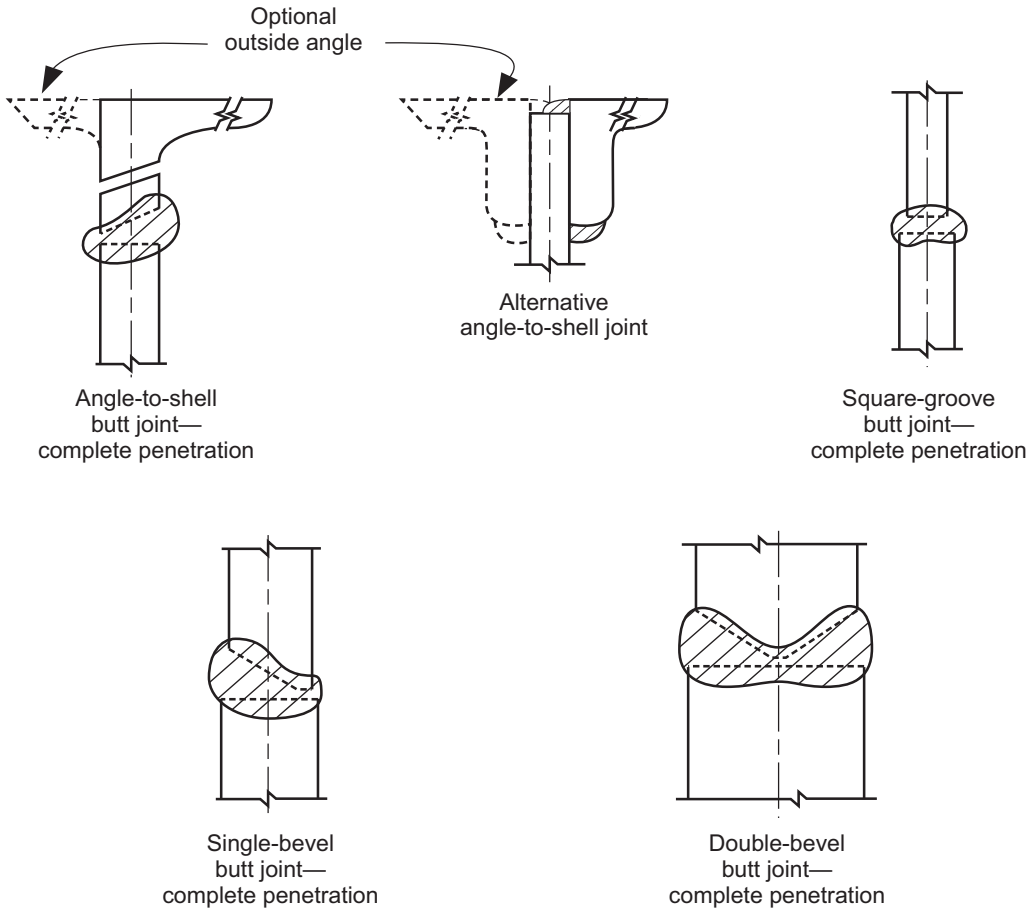

NOTE See 5.1.5.3 for specific requirements for horizontal shell joints.

Figure 5.2—Typical Horizontal Shell Joints

5.1.5.3 Horizontal Shell Joints

a) Horizontal shell joints shall have complete penetration and complete fusion; however, as an alternative, top angles may be attached to the shell by a double-welded lap joint. The suitability of the plate preparation and welding procedure shall be determined in accordance with 9.2.

• b) Unless otherwise specified, abutting shell plates at horizontal joints shall have a common vertical centerline.

5.1.5.4 Lap-Welded Bottom Joints

• **5.1.5.4.1** Lap-welded bottom plates shall be reasonably rectangular. Additionally, plate may be either square cut or may have mill edges. Mill edges to be welded shall be relatively smooth and uniform, free of deleterious deposits, and have a shape such that a full fillet weld can be achieved. Unless otherwise specified by the Purchaser, lap welded plates on sloped bottoms shall be overlapped in a manner to reduce the tendency for liquid to puddle during draw-down.

5.1.5.4.2 Three-plate laps in tank bottoms shall be at least 300 mm (12 in.) from each other, from the tank shell, and from joints between annular plates and the bottom. A three-plate lap is created where three plates come together and all plates are joined to one another by lap welds. A location where a pair of bottom plates are lap-welded to each other and are lapped onto an annular plate constitutes a three-plate lap, but lapping a single bottom plate onto a butt-welded annular plate splice does not constitute a three-plate lap weld since the two annular plates are not joined together by a lap weld. These lap joint connections to the butt-weld annular plate are illustrated in Figure 5.3d.

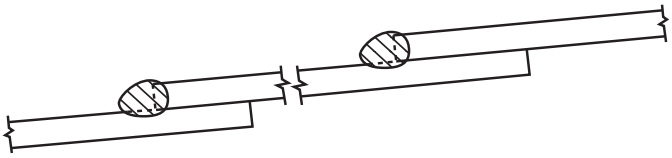

Roof-Plate Joint

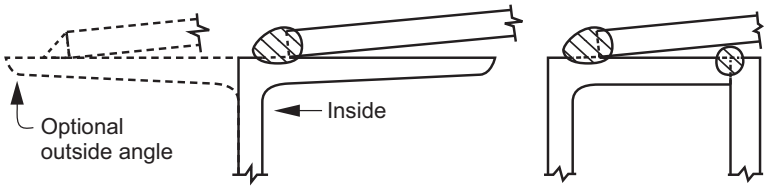

Roof-to-Shell Joints

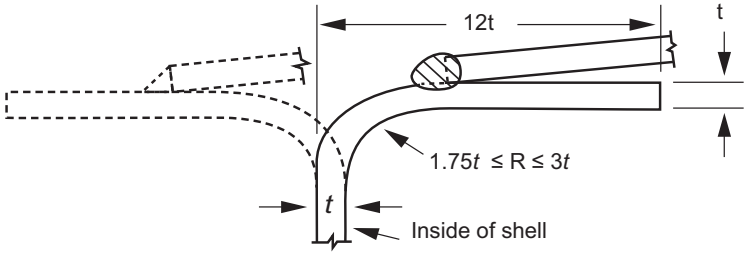

Alternative Roof-to-Shell Joint
(See Note 2)

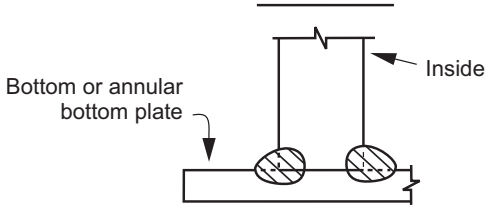

Bottom-to-Shell Joint

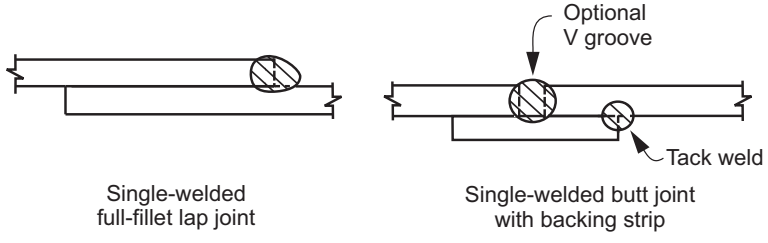

Bottom-Plate Joints

NOTE 1 See 5.1.5.4 through 5.1.5.9 for specific requirements for roof and bottom joints.
NOTE 2 The alternative roof-to-shell joint is subject to the limitations of 5.1.5.9, Item f.

Figure 5.3a—Typical Roof and Bottom Joints

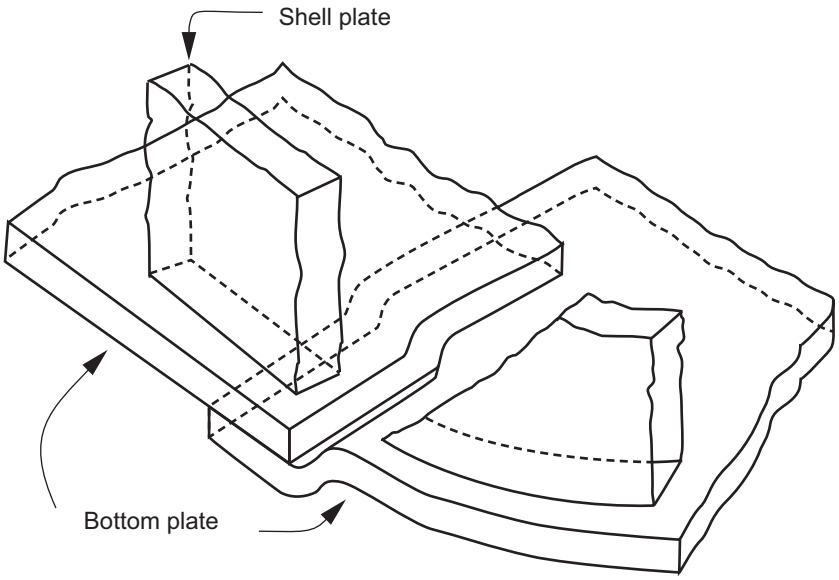

Figure 5.3b—Method for Preparing Lap-welded Bottom Plates under Tank Shell (See 5.1.5.4)

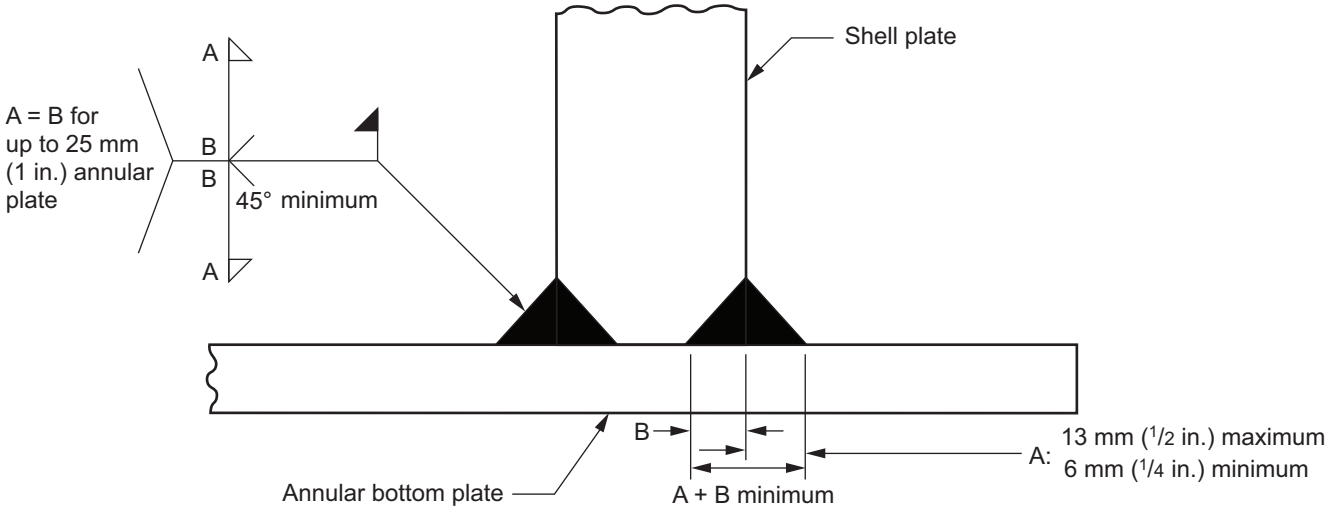

NOTE 1 A = Fillet weld size limited to 13 mm (1/2 in.) maximum.

NOTE 2 A + B = Thinner of shell or annular bottom plate thickness.

NOTE 3 Groove weld B may exceed fillet size A only when annular plate is thicker than 25 mm (1 in.).

Figure 5.3c—Detail of Double Fillet-groove Weld for Annular Bottom Plates with a Nominal Thickness Greater than 13 mm (1/2 in.) (See 5.1.5.7, Item b)

5.1.5.4.3 When annular plates are used or are required by 5.5.1, they shall be butt-welded and shall have a radial width that provides at least 600 mm (24 in.) between the inside of the shell and any lap-welded joint in the remainder of the bottom. Bottom plates need to be welded on the top side only, with a continuous full-fillet weld on all seams. Unless annular bottom plates are used, the bottom plates under the bottom shell ring shall have the outer ends of the joints fitted and lap-welded to form a smooth bearing surface for the shell plates, as shown in Figure 5.3b. Lap-welded bottom plates shall be seal-welded to each other on the exposed outer periphery of their lapped edges.

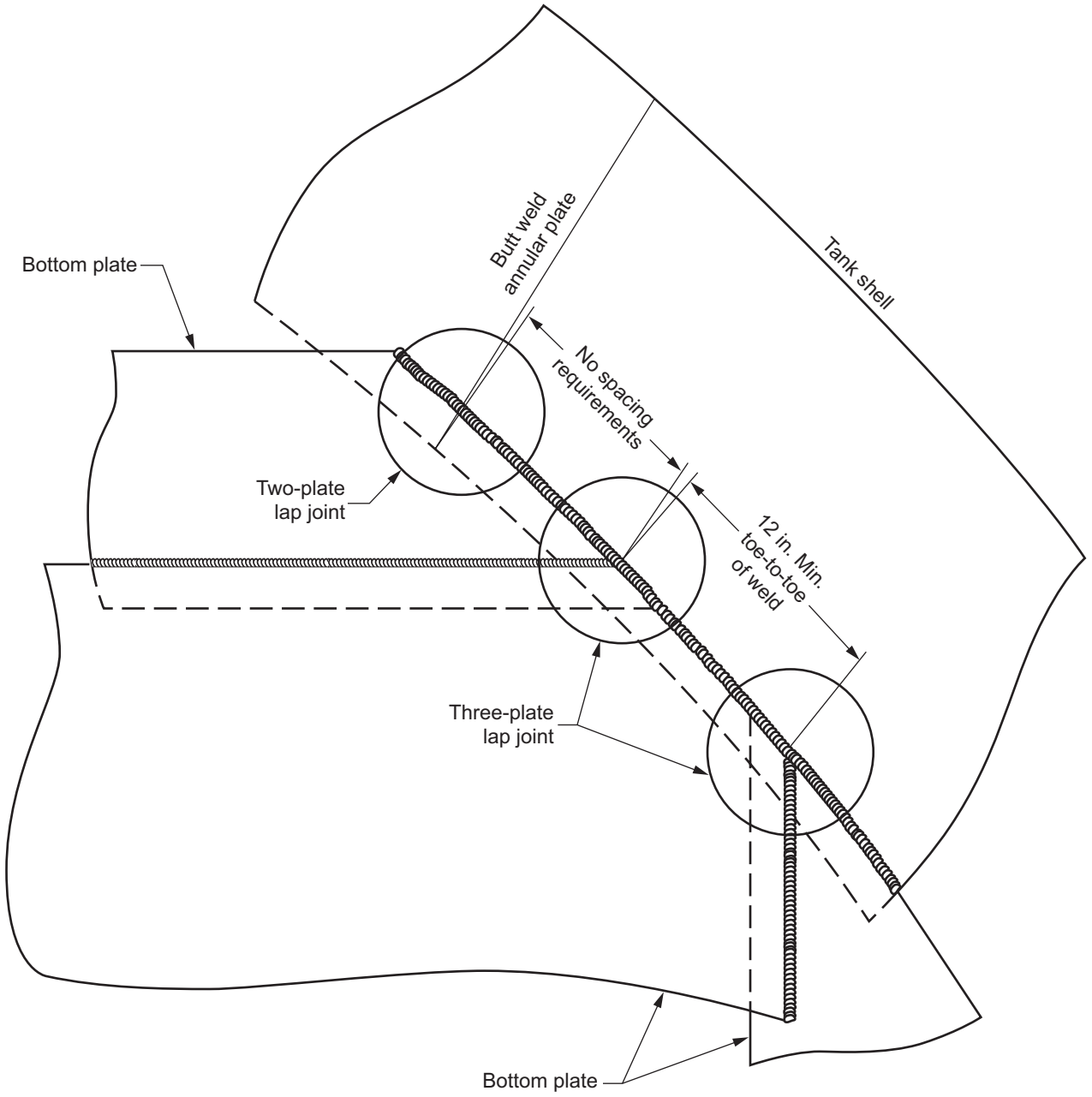

Figure 5.3d—Spacing of Three-Plate Welds at Annular Plates

• 5.1.5.5 Butt-Welded Bottom Joints

Butt-welded bottom plates shall have their parallel edges prepared for butt welding with either square or V grooves. Butt-welds shall be made using an appropriate weld joint configuration that yields a complete penetration weld. Typical permissible bottom butt-welds without a backing strip are the same as those shown in Figure 5.1. The use of a backing strip at least 3 mm ($^1/_8$ in.) thick tack welded to the underside of the plate is permitted. Butt-welds using a backing strip are shown in Figure 5.3a. If square grooves are employed, the root openings shall not be less than 6 mm ($^1/_4$ in.). A metal spacer shall be used to maintain the root opening between the adjoining plate edges unless the Manufacturer submits another method of butt-welding the bottom for the Purchaser's approval. Three-plate joints in the tank bottom shall be at least 300 mm (12 in.) from each other and from the tank shell.

5.1.5.6 Bottom Annular-Plate Joints

Bottom annular-plate radial joints shall be butt-welded in accordance with 5.1.5.5 and shall have complete penetration and complete fusion. The backing strip, if used, shall be compatible for welding the annular plates together.

5.1.5.7 Shell-to-Bottom Fillet Welds

a) For bottom and annular plates with a nominal thickness 13 mm ($^1/_2$ in.), and less, the attachment between the bottom edge of the lowest course shell plate and the bottom plate shall be a continuous fillet weld laid on each side of the shell plate. The size of each weld shall not be more than 13 mm ($^1/_2$ in.) and shall not be less than the nominal thickness of the thinner of the two plates joined (that is, the shell plate or the bottom plate immediately under the shell) or less than the following values:

Nominal Thickness of Shell Plate		Minimum Size of Fillet Weld	
(mm)	(in.)	(mm)	(in.)
5	0.1875	5	$^3/_{16}$
> 5 to 20	> 0.1875 to 0.75	6	$^1/_4$
> 20 to 32	> 0.75 to 1.25	8	$^5/_{16}$
> 32 to 45	> 1.25 to 1.75	10	$^3/_8$

b) For annular plates with a nominal thickness greater than 13 mm ($^1/_2$ in.), the attachment welds shall be sized so that either the legs of the fillet welds or the groove depth plus the leg of the fillet for a combined weld is of a size equal to the annular-plate thickness (see Figure 5.3c), but shall not exceed the shell plate thickness.

c) Shell-to-bottom fillet weld around low-type reinforcing pads shown in Figure 5.8 Details a and b or around shell insert plates that extend beyond the outside surface of the adjacent tank shell shall be sized as required by paragraphs a or b above.

d) The bottom or annular plates shall be sufficient to provide a minimum 13 mm ($^1/_2$ in.) from the toe of the fillet weld referenced in 5.1.5.7c to the outside edge of the bottom or annular plates.

5.1.5.8 Wind Girder Joints

a) Full-penetration butt-welds shall be used for joining ring sections.

• b) Continuous welds shall be used for all horizontal top-side joints and for all vertical joints. Horizontal bottom-side joints shall be seal-welded unless specified otherwise by the Purchaser.

5.1.5.9 Roof and Top-Angle Joints

a) Roof plates shall, as a minimum, be welded on the top side with a continuous full-fillet weld on all seams. Butt-welds are also permitted.

b) For frangible roofs, roof plates shall be attached to the top angle of a tank with a continuous fillet weld on the top side only, as specified in 5.10.2.6. For non-frangible roofs, alternate details are permitted.

c) The top-angle sections, tension rings, and compression rings shall be joined by butt-welds having complete penetration and fusion. Joint efficiency factors need not be applied when conforming to the requirements of 5.10.5 and 5.10.6.

d) At the option of the Manufacturer, for self-supporting roofs of the cone, dome, or umbrella type, the edges of the roof plates may be flanged horizontally to rest flat against the top angle to improve welding conditions.

• e) Except as specified for open-top tanks in 5.9, for tanks with frangible joints per 5.10.2.6, for self-supporting roofs in 5.10.5, and 5.10.6, and for tanks with the flanged roof-to-shell detail described in Item f below, tank shells shall be supplied with top angles of not less than the following sizes:

Tank Diameter (D)	Minimum Top Angle Size[a] (mm)	Minimum Top Angle Size[a] (in.)
$D \leq 11$ m, ($D \leq 35$ ft)	$50 \times 50 \times 5$	$2 \times 2 \times 3/16$
11 m < $D \leq 18$ m, (35 ft < $D \leq 60$ ft)	$50 \times 50 \times 6$	$2 \times 2 \times 1/4$
$D > 18$ m, ($D > 60$ ft)	$75 \times 75 \times 10$	$3 \times 3 \times 3/8$

[a] Approximate equivalent sizes may be used to accommodate local availability of materials.

For fixed roof tanks equipped with full shell height insulation or jacketing, the horizontal leg of the top shell stiffener shall project outward. For insulation system compatibility, the Purchaser shall specify if the horizontal leg is to be larger than specified above.

b) For tanks with a diameter less than or equal to 9 m (30 ft) and a supported cone roof (see 5.10.4), the top edge of the shell may be flanged in lieu of installing a top angle. The bend radius and the width of the flanged edge shall conform to the details of Figure 5.3a. This construction may be used for any tank with a self-supporting roof (see 5.10.5 and 5.10.6) if the total cross-sectional area of the junction fulfills the stated area requirements for the construction of the top angle. No additional member, such as an angle or a bar, shall be added to the flanged roof-to-shell detail.

5.2 Design Considerations

5.2.1 Loads

Loads are defined as follows.

• a) **Dead Load (D_L):** The weight of the tank or tank component, including any corrosion allowance unless otherwise noted.

• b) **Design External Pressure (P_e):** Shall not be less than 0.25 kPa (1 in. of water) except that External Pressure (P_e) shall be considered as 0 kPa (0 in. of water) for tanks with circulation vents meeting Annex H requirements. Refer to Annex V for external pressure greater than 0.25 kPa (1 in. of water). Design requirements for vacuum exceeding this value and design requirements to resist flotation and external fluid pressure shall be a matter of agreement between the Purchaser and the Manufacturer (see Annex V). Tanks that meet the requirements of this standard may be subjected to a partial vacuum of 0.25 kPa (1 in. of water), without the need to provide any additional supporting calculations.

c) **Design Internal Pressure (P_i):** Shall not exceed 18 kPa (2.5 lbf/in.^{2}).

d) **Hydrostatic Test (H_t):** The load due to filling the tank with water to the design liquid level.

e) **Internal Floating Roof Loads:**

1) Dead load of internal floating roof (D_f) including the weight of the flotation compartments, seal and all other floating roof and attached components.

2) Internal floating roof uniform live load (L_{f1}) (0.6 kPa [12.5 lbf/ft^2]) if no automatic drains are provided, (0.24 kPa [5 lbf/f^2]) if automatic drains are provided).

3) Internal floating roof point load (L_{f2}) of at least two men walking anywhere on the roof. One applied load of 2.2 kN [500 lbf] over 0.1 m^2 [1 ft^2] applied anywhere on the roof addresses two men walking.

4) Internal floating roof design external pressure (P_{fe}) of (0.24 kPa [5 lbf/ft^2]) minimum.

f) **Minimum Roof Live Load (L_r):** 1.0 kPa (20 lb/ft^2) on the horizontal projected area of the roof. The minimum roof live load may alternatively be determined in accordance with ASCE 7, but shall not be less than 0.72 kPa (15 psf). The minimum roof live load shall be reported to the Purchaser.

• g) **Seismic (E):** Seismic loads determined in accordance with F.1 through F.9 (see Data Sheet, Line 9).

h) **Snow (S):** The ground snow load shall be determined from ASCE 7, Figure 7-1 or Table 7-1 unless the ground snow load that equals or exceeds the value based on a 2 % annual probability of being exceeded (50-year mean recurrence interval) or a national standard (such as the National Building Code of Canada) is specified by the Purchaser.

1) The balanced design snow load (S_b) shall be 0.84 times the ground snow load. Alternately, the balanced design snow load (S_b) shall be determined from the ground snow load in accordance with ASCE 7. The balanced design snow load shall be reported to the Purchaser.

2) The unbalanced design snow load (S_u) for cone roofs with a slope of 10° or less shall be equal to the balanced snow load. The unbalanced design snow load (S_u) for all other roofs shall be 1.5 times the balanced design snow load. Unbalanced design snow load shall be applied over a 135° sector of the roof plan with no snow on the remaining 225° sector. Alternately, the unbalanced snow load shall be determined from the ground snow load in accordance with ASCE 7

3) The balanced and unbalanced design snow loads shall be reported to the Purchaser.

i) **Stored Liquid (F):** The load due to filling the tank to the design liquid level (see 5.6.3.2) with liquid with the design specific gravity specified by the Purchaser.

j) **Test Pressure (P_t):** As required by F.4.4 or F.7.6.

k) **Wind (W):** The design wind speed (V) shall be either:

— the 3-sec gust design wind speed determined from ASCE 7-05 multiplied by $\sqrt{I}$, Figure 6-1; or

— the 3-sec gust design wind speed determined from ASCE 7-10 for risk category specified by the Purchaser (Figure 26.5-1A, Figure 26.5-1B, or Figure 26.5-1C) multiplied by 0.78; or

— the 3-sec gust design wind speed specified by the Purchaser, which shall be for a 3-sec gust based on a 2 % annual probability of being exceeded [50-year mean recurrence interval].

The 3-sec gust wind speed used shall be reported to the Purchaser.

1) Design wind pressure (P_{WS} and P_{WR}) using design wind speed (V): The design wind pressure on shell (P_{WS}) shall be 0.86 kPa $(V/190)^2$, ([18 lbf/ft^2][V/120]^2) on vertical projected areas of cylindrical surfaces. The design wind uplift pressure on roof (P_{WR}) shall be 1.44 kPa $(V/190)^2$, ([30 lbf/ft^2][V/120]^2) (see item 2) on horizontal projected areas of conical or doubly curved surfaces. These design wind pressures are in accordance with ASCE 7-05 for wind exposure Category C. As alternatives, pressures may be determined in accordance with:

a) ASCE 7-05 (exposure category and importance factor provided by Purchaser); or

b) ASCE 7-10 (exposure category and risk category provided by Purchaser) with either velocity multiplied by 0.78 or the ASCE 7-10 pressure multiplied by 0.6; or

c) a national standard for the specific conditions for the tank being designed.

2) The design uplift pressure on the roof (wind plus internal pressure) need not exceed 1.6 times the design pressure P determined in F.4.1.

3) Windward and leeward horizontal wind loads on the roof are conservatively equal and opposite and therefore they are not included in the above pressures.

4) Fastest mile wind speed times 1.2 is approximately equal to 3-sec gust wind speed (V).

NOTE ASCE 7-10 wind velocities now have LRFD load factors and risk category (importance factors) built in, whereas API 650 uses the working stress. The 0.78 factor applied to the ASCE 7-10 wind speed provides a conversion to working stress levels.

l) **External Loads:**

1) The Purchaser shall state the magnitude and direction of external loads or restraint, if any, for which the shell or shell connections must be designed. The design for such loadings shall be a matter of agreement between the Purchaser and the Manufacturer.

2) Unless otherwise specified, seismic design shall be in accordance with Annex E.

3) Design for localized wind induced forces on roof components shall be a matter of agreement between the Purchaser and the Manufacturer.

4) Localized loads resulting from items such as ladders, stairs, platforms, etc., shall be considered.

5) The Purchaser shall state the magnitude and direction of any external loads other than normal personnel access for which the roof manholes and openings shall be designed. The design for such loadings shall be a matter of agreement between the Purchaser and the Manufacturer.

5.2.2 Load Combinations

Loads shall be combined as follows. Design rules in this Standard use these load combinations, including the absence of any load other than D_L in the combinations:

a) Fluid and Internal Pressure: $D_L + F + P_i$

b) Hydrostatic Test: $D_L + H_t + P_t$

c) Wind and Internal Pressure: $D_L + W + F_p\, P_i$

d) Wind and External Pressure: $D_L + W + 0.4\, P_e$

e) Gravity Loads:

1) $D_L + (L_r \text{ or } S_u \text{ or } S_b) + 0.4\, P_e$

2) $D_L + P_e + 0.4(L_r \text{ or } S_u \text{ or } S_b)$

f) Seismic: $D_L + F + E + 0.1S_b + F_p\, P_i$

g) Gravity Loads for Fixed Roofs with Suspended Floating Roofs:

1) $D_L + D_f + (L_r \text{ or } S) + P_e + 0.4(P_{fe} \text{ or } L_{f1} \text{ or } L_{f2})$

2) $D_L + D_f + (P_{fe} \text{ or } L_{f1} \text{ or } L_{f2}) + 0.4[(L_r \text{ or } S) + P_e]$

The pressure combination factor (F_p) is defined as the ratio of normal operating pressure to design pressure, with a minimum value of 0.4.

5.2.3 Design Factors

The Purchaser shall state the design metal temperature (based on ambient temperatures), the maximum design temperature, the design specific gravity, the corrosion allowance (if any), and the seismic factors.

5.2.4 Protective Measures

The Purchaser shall consider foundations, corrosion allowance, hardness testing, and any other protective measures deemed necessary. For example, for insulated tanks, means to prevent infiltration of water into the insulation shall be specified, especially around penetrations of the insulation and at the roof-to-shell junction.

5.2.5 Tank Capacity

• **5.2.5.1** The Purchaser shall specify the maximum capacity and the overfill protection level (or volume) requirement (see API 2350).

5.2.5.2 Maximum capacity is the volume of product in a tank when the tank is filled to its design liquid level as defined in 5.6.3.2 (see Figure 5.4).

5.2.5.3 The net working capacity is the volume of available product under normal operating conditions. The net working capacity is equal to the maximum capacity (see 5.2.6.2) less the minimum operating volume remaining in the tank, less the overfill protection level (or volume) requirement (see Figure 5.4).

5.3 Special Considerations

5.3.1 Foundation

• **5.3.1.1** The selection of the tank site and the design and construction of the foundation shall be given careful consideration, as outlined in Annex B, to ensure adequate tank support. The adequacy of the foundation is the responsibility of the Purchaser. Foundation loading data shall be provided by the Manufacturer on the Data Sheet, Line 13.

5.3.1.2 Sliding friction resistance shall be verified for tanks subject to lateral wind loads or seismic loads (see 5.11.4 and E.7.6).

5.3.2 Corrosion Allowances

• **5.3.2.1** The Purchaser, after giving consideration to the total effect of the liquid stored, the vapor above the liquid, and the atmospheric environment, shall specify in the Data Sheet, Table 1 and Table 2, any corrosion allowances to be provided for all components, including each shell course, for the bottom, for the roof, for nozzles and manholes, and for structural members.

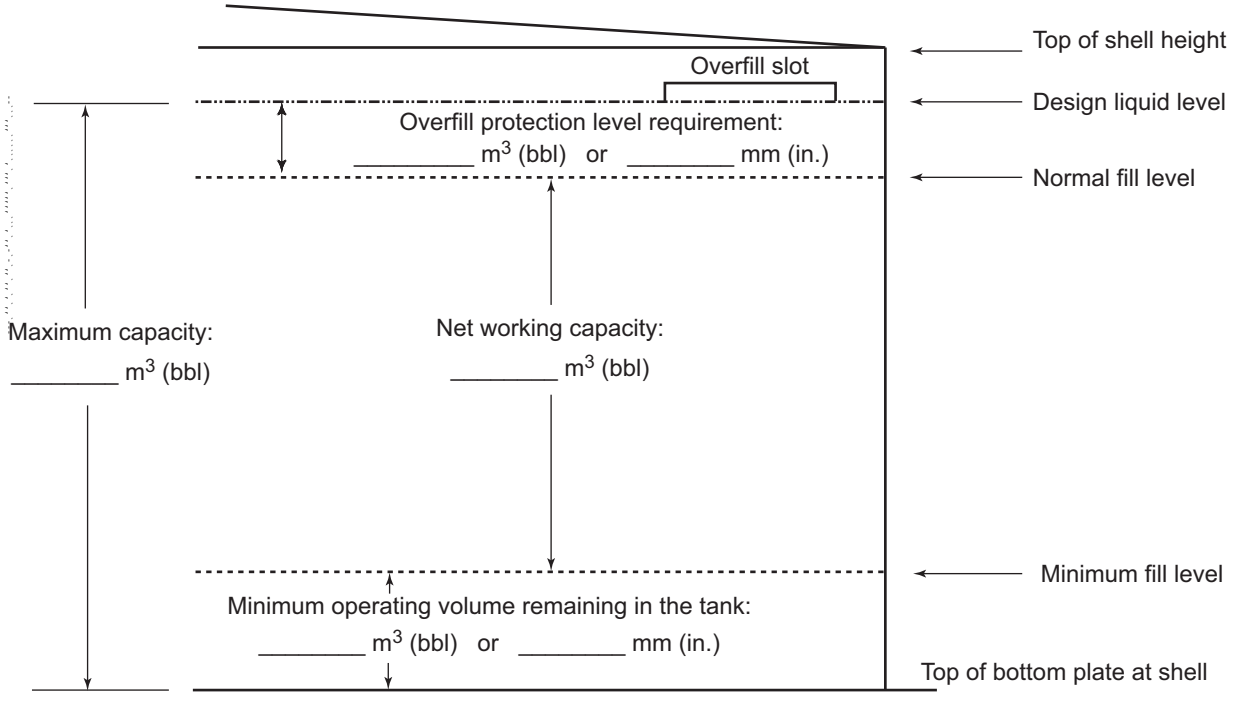

Figure 5.4—Storage Tank

5.3.2.2 Excluding nozzle necks, corrosion allowances for nozzles, flush-type cleanouts, manholes, and self-supporting roofs shall be added to the design thickness, if calculated, or to the minimum specified thickness.

• **5.3.2.3** For nozzle necks, any specified nozzle neck corrosion allowance shall, by agreement between the Purchaser and the Manufacturer, be added to either the nominal neck thickness shown in Table 5.6a and Table 5.6b (or Table 5.7a and Table 5.7b), or to the minimum calculated thickness required for pressure head and mechanical strength. In no case shall the neck thickness provided be less than the nominal thickness shown in the table.

5.3.2.4 Corrosion allowance for anchor bolts shall be added to the nominal diameter.

5.3.2.5 Corrosion allowance for anchor straps and brackets shall be added to the required strap and bracket thickness.

• **5.3.2.6** For internal structural members, the corrosion allowance shall be applied to the total thickness unless otherwise specified.

5.3.3 Service Conditions

• The Purchaser shall specify any applicable special metallurgical requirements pertaining to the selection of materials and the fabrication processes as required by any anticipated service conditions. When the service conditions might include the presence of hydrogen sulfide or other conditions that could promote hydrogen-induced cracking, notably near the bottom of the shell at the shell-to-bottom connections, care should be taken to ensure that the materials of the tank and details of construction are adequate to resist hydrogen-induced cracking. The Purchaser should consider limits on the sulfur content of the base and weld metals as well as appropriate quality control procedures in plate and tank fabrication. The hardness of the welds, including the heat-affected zones, in contact with these conditions should be considered. The weld metal and adjacent heat-affected zone often contain a zone of hardness well in excess of Rockwell C 22 and can be expected to be more susceptible to cracking than unwelded metal is. Any hardness criteria should be a matter of agreement between the Purchaser and the Manufacturer and should be based on an evaluation of the expected hydrogen sulfide concentration in the product, the possibility of moisture being present on the inside metal surface, and the strength and hardness characteristics of the base metal and weld metal. See the Data Sheet, Line 5.

• 5.3.4 Weld Hardness

a) Weld metal and Heat Affected Zone (HAZ) hardnesses shall comply with the H_2S Supplemental Specification listed on the Data Sheet, Line 5, when specified by the Purchaser.

b) When specified by the Purchaser, the hardness of the weld metal for shell materials in Group IV, IVA, V, or VI shall be evaluated by one or both of the following methods.

1) The welding-procedure qualification tests for all welding shall include hardness tests of the weld metal and heat-affected zone of the test plate. The methods of testing and the acceptance standards shall be agreed upon by the Purchaser and the Manufacturer.

2) All welds deposited by machine or an automatic process shall be hardness tested on the product-side surface. Unless otherwise specified, one test shall be conducted for each vertical weld, and one test shall be conducted for each 30 m (100 ft) of circumferential weld. The methods of testing and the acceptance standards shall be agreed upon by the Purchaser and the Manufacturer.

• 5.3.5 Thickness

When 6 mm ($^1/_4$ in.) thick material is specified, 0.236 in. thick material may be used in the US Customary rule set with Purchaser approval. Similarly when 5 mm ($^3/_{16}$ in.) thick material is specified, 4.8 mm. thick material may be used in the SI rule set with Purchaser approval. The design calculations shall be based on thickness used.

5.4 Bottom Plates

5.4.1 All bottom plates shall have a corroded thickness of not less than 6 mm (0.236 in.) [49.8 kg/m^2 (9.6 lbf/ft^2) (see 4.2.1.2)]. Unless otherwise agreed to by the Purchaser, all rectangular and sketch plates (bottom plates on which the shell rests that have one end rectangular) shall have a nominal width of not less than 1800 mm (72 in.).

5.4.2 Bottom plates of sufficient size shall be ordered so that, when trimmed, at least a 50 mm (2 in.) width will project outside the shell or meet requirements given in 5.1.5.7 d whichever is greater.

5.4.3 Bottom plates shall be welded in accordance with 5.1.5.4 or 5.1.5.5.

5.4.4 Unless otherwise specified on the Data Sheet, Line 12, tank bottoms requiring sloping shall have a minimum slope of 1:120 upwards toward center of the tank.

5.4.5 If specified on the Data Sheet, Line 12, a foundation drip ring shall be provided to prevent ingress of water between the tank bottom and foundation. Unless the Purchaser specifies otherwise, the ring shall meet the following requirements (see Figure 5.5).

1) Material shall be carbon steel, 3 mm ($^1/_8$ in.) minimum thickness.

2) All radial joints between sections of the drip rings, as well as between the drip ring and the annular plate or bottom, shall be continuously seal-welded.

3) The drip ring shall extend at least 75 mm (3 in.) beyond the outer periphery of the foundation ringwall and then turn down (up to 90°) at its outer diameter.

4) The top and bottom of the drip ring, and the top of the tank bottom edge projection beyond the shell, and a portion of the tank shell shall be coated if specified by the Purchaser.

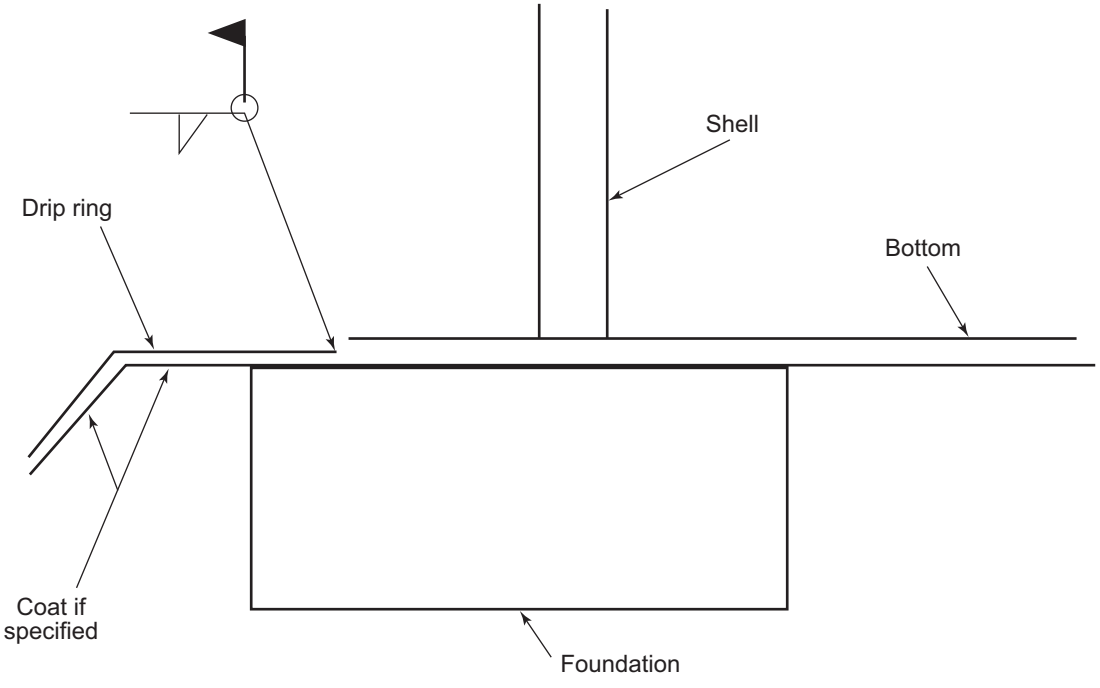

Figure 5.5—Drip Ring (Suggested Detail)

5.5 Annular Bottom Plates

5.5.1 When the bottom shell course is designed using the allowable stress for materials in Group IV, IVA, V, or VI, butt-welded annular bottom plates shall be used (see 5.1.5.6). When the bottom shell course is of a material in Group IV, IVA, V, or VI and the maximum product stress (see 5.6.2.1) for the first shell course is less than or equal to 160 MPa (23,200 lbf/in.^{2}) or the maximum hydrostatic test stress (see 5.6.2.2) for the first shell course is less than or equal to 171 MPa (24,900 lbf/in.^{2}), lap-welded bottom plates (see 5.1.5.4) may be used in lieu of butt-welded annular bottom plates.

5.5.2 Annular bottom plates shall have a radial width that provides at least 600 mm (24 in.) between the inside of the shell and any lap-welded joint in the remainder of the bottom. Annular bottom plate projection outside the shell shall meet the requirements of 5.4.2. A greater radial width of annular plate is required when calculated as follows:

In SI units:

$$\frac{215\ t_b}{(HG)^{0.5}}$$

where

t_b is the thickness of the annular plate (see 5.5.3), in mm;

H is the maximum design liquid level (see 5.6.3.2), in m;

G is the design specific gravity of the liquid to be stored.

In USC units:

$$\frac{390\ t_b}{(HG)^{0.5}}$$

where

t_b is the thickness of the annular plate (see 5.5.3), in inches;

H is the maximum design liquid level (see 5.6.3.2), in feet;

G is the design specific gravity of the liquid to be stored.

5.5.3 The thickness of the annular bottom plates shall not be less than the greater thickness determined using Table 5.1a and Table 5.1b for product design (plus any specified corrosion allowance) or for hydrostatic test design. Table 5.1a and Table 5.1b are applicable for effective product height of $H \times G \leq 23$ m (75 ft). Beyond this height an elastic analysis must be made to determine the annular plate thickness.

5.5.4 The ring of annular plates shall have a circular outside circumference, but may have a regular polygonal shape inside the tank shell, with the number of sides equal to the number of annular plates. These pieces shall be welded in accordance with 5.1.5.6 and 5.1.5.7, Item b.

5.5.5 In lieu of annular plates, the entire bottom may be butt-welded provided that the requirements for annular plate thickness, welding, materials, and inspection are met for the annular distance specified in 5.5.2.

Table 5.1a—Annular Bottom-Plate Thicknesses (t_b) (SI)

Plate Thickness[a] of First Shell Course (mm)	Stress[b] in First Shell Course (MPa)			
	≤ 190	≤ 210	≤ 220	≤ 250
$t \le 19$	6	6	7	9
$19 < t \le 25$	6	7	10	11
$25 < t \le 32$	6	9	12	14
$32 < t \le 40$	8	11	14	17
$40 < t \le 45$	9	13	16	19

[a] Plate thickness refers to the corroded shell plate thickness for product design and nominal thickness for hydrostatic test design.

[b] The stress to be used is the maximum stress in the first shell course (greater of product or hydrostatic test stress). The stress may be determined using the required thickness divided by the thickness from "a" then multiplied by the applicable allowable stress:

Product Stress = ($t_d - CA$/ corroded t) (S_d)

Hydrostatic Test Stress = (t_t / nominal t) (S_t)

NOTE The thicknesses specified in the table, as well as the width specified in 5.5.2, are based on the foundation providing uniform support under the full width of the annular plate. Unless the foundation is properly compacted, particularly at the inside of a concrete ringwall, settlement will produce additional stresses in the annular plate.

Table 5.1b—Annular Bottom-Plate Thicknesses (t_b) (USC)

Plate Thickness[a] of First Shell Course (in.)	Stress[b] in First Shell Course (lbf/in.^{2})			
	≤ 27,000	≤ 30,000	≤ 32,000	≤ 36,000
$t \le 0.75$	0.236	0.236	9/32	11/32
$0.75 < t \le 1.00$	0.236	9/32	3/8	7/16
$1.00 < t \le 1.25$	0.236	11/32	15/32	9/16
$1.25 < t \le 1.50$	5/16	7/16	9/16	11/16
$1.50 < t \le 1.75$	11/32	1/2	5/8	3/4

[a] Plate thickness refers to the corroded shell plate thickness for product design and nominal thickness for hydrostatic test design.

[b] The stress to be used is the maximum stress in the first shell course (greater of product or hydrostatic test stress). The stress may be determined using the required thickness divided by the thickness from "a" then multiplied by the applicable allowable stress:

Product Stress = ($t_d - CA$/ corroded t) (S_d)

Hydrostatic Test Stress = (t_t / nominal t) (S_t)

NOTE The thicknesses specified in the table, as well as the width specified in 5.5.2, are based on the foundation providing uniform support under the full width of the annular plate. Unless the foundation is properly compacted, particularly at the inside of a concrete ringwall, settlement will produce additional stresses in the annular plate.

5.6 Shell Design

5.6.1 General

5.6.1.1 The required shell thickness shall be the greater of the design shell thickness, including any corrosion allowance, or the hydrostatic test shell thickness, but the shell thickness shall not be less than the following:

Nominal Tank Diameter		Nominal Plate Thickness	
(m)	(ft)	(mm)	(in.)
< 15	< 50	5	3/16
15 to < 36	50 to < 120	6	1/4
36 to 60	120 to 200	8	5/16
> 60	> 200	10	3/8

NOTE 1 Unless otherwise specified by the Purchaser, the nominal tank diameter shall be the centerline diameter of the bottom shell-course plates.

NOTE 2 The thicknesses specified are based on erection requirements.

NOTE 3 When specified by the Purchaser, plate with a nominal thickness of 6 mm may be substituted for 1/4-in. plate.

NOTE 4 For diameters less than 15 m (50 ft) but greater than 3.2 m (10.5 ft), the nominal thickness of the lowest shell course shall not be less than 6 mm (1/4 in.).

5.6.1.2 Unless otherwise agreed to by the Purchaser, the shell plates shall have a minimum nominal width of 1800 mm (72 in.). Plates that are to be butt-welded shall be properly squared.

5.6.1.3 The calculated stress for each shell course shall not be greater than the stress permitted for the particular material used for the course. When the allowable stress for an upper shell course is lower than the allowable stress of the next lower shell course, then either a or b shall be satisfied.

a) The lower shell course thickness shall be no less than the thickness required of the upper shell course for product and hydrostatic test loads by 5.6.3 or 5.6.4.

b) The thickness of all shell courses shall be that determined from an elastic analysis per 5.6.5 using final plate thicknesses.

The inside of an upper shell course shall not project beyond the inside surface of the shell course below (except within tolerances provided in 7.2.3.2).

5.6.1.4 The tank shell shall be checked for stability against buckling from the design wind speed in accordance with 5.9.7. If required for stability, intermediate girders, increased shell-plate thicknesses, or both shall be used.

5.6.1.5 Isolated radial loads on the tank shell, such as those caused by heavy loads on platforms and elevated walkways between tanks, shall be distributed by rolled structural sections, plate ribs, or built-up members.

5.6.2 Allowable Stress

5.6.2.1 The maximum allowable product design stress, S_d, shall be as shown in Table 5.2a and Table 5.2b. The corroded plate thicknesses shall be used in the calculation. The design stress basis, S_d, shall be either two-thirds the yield strength or two-fifths the tensile strength, whichever is less.

5.6.2.2 The maximum allowable hydrostatic test stress, S_t, shall be as shown in Table 5.2a and Table 5.2b. The nominal plate thicknesses shall be used in the calculation. The hydrostatic test basis shall be either three-fourths the yield strength or three-sevenths the tensile strength, whichever is less.

Table 5.2a—Permissible Plate Materials and Allowable Stresses (SI)

Plate Specification	Grade	Nominal Plate Thickness t mm	Minimum Yield Strength MPa	Minimum Tensile Strength MPa	Product Design Stress S_d MPa	Hydrostatic Test Stress S_t MPa
ASTM Specifications						
A283M	C		205	380	137	154
A285M	C		205	380	137	154
A131M	A, B		235	400	157	171
A36M	—		250	400	160	171
A131M	EH 36		360	490[a]	196	210
A573M	400		220	400	147	165
A573M	450		240	450	160	180
A573M	485		290	485[a]	193	208
A516M	380		205	380	137	154
A516M	415		220	415	147	165
A516M	450		240	450	160	180
A516M	485		260	485	173	195
A662M	B		275	450	180	193
A662M	C		295	485[a]	194	208
A537M	1	$t \le 65$ $65 < t \le 100$	345 310	485[a] 450[b]	194 180	208 193
A537M	2	$t \le 65$ $65 < t \le 100$	415 380	550[a] 515[b]	220 206	236 221
A633M	C, D	$t \le 65$ $65 < t \le 100$	345 315	485[a] 450[b]	194 180	208 193
A678M	A		345	485[a]	194	208
A678M	B		415	550[a]	220	236
A737M	B		345	485[a]	194	208
A841M	Class 1		345	485[a]	194	208
A841M	Class 2		415	550[a]	220	236

Table 5.2a—Permissible Plate Materials and Allowable Stresses (SI) (Continued)

Plate Specification	Grade	Nominal Plate Thickness t mm	Minimum Yield Strength MPa	Minimum Tensile Strength MPa	Product Design Stress S_d MPa	Hydrostatic Test Stress S_t MPa
CSA Specifications						
G40.21M	260W		260	410	164	176
G40.21M	260 WT		260	410	164	176
G40.21M	300W		300	450	180	193
G40.21M	300WT		300	450	180	193
G40.21M	350W		350	450	180	193
G40.21M	350WT	$t \le 65$	350	480[a]	192	206
		$65 < t \le 100$	320	480[a]	192	206
National Standards						
	235		235	365	137	154
	250		250	400	157	171
	275		275	430	167	184
ISO Specifications						
ISO 630	E275C, D	$t \le 16$	275	410	164	176
		$16 < t \le 40$	265	410	164	176
	E355C, D	$t \le 16$	355	490[a]	196	210
		$16 < t \le 40$	345	490[a]	196	210
		$40 < t \le 50$	335	490[a]	196	210
EN Specifications						
EN 10025	S 275J0, J2	$t \le 16$	275	410	164	176
		$16 < t \le 1^1/2$	265	410	164	176
	S 355J0, J2, K2	$t \le 16$	355	470[a]	188	201
		$16 < t \le 40$	345	470[a]	188	201
		$40 < t \le 50$	335	470[a]	188	201

[a] By agreement between the Purchaser and the Manufacturer, the tensile strength of ASTM A537M, Class 2, A678M, Grade B, and A841M, Class 2 materials may be increased to 585 MPa minimum and 690 MPa maximum. The tensile strength of the other listed materials may be increased to 515 MPa minimum and 620 MPa maximum. When this is done, the allowable stresses shall be determined as stated in 5.6.2.1 and 5.6.2.2.

[b] By agreement between the Purchaser and the Manufacturer, the tensile strength of ASTM A537M, Class 2 materials may be increased to 550 MPa minimum and 690 MPa maximum. The tensile strength of the other listed materials may be increased to 485 MPa minimum and 620 MPa maximum. When this is done, the allowable stresses shall be determined as stated in 5.6.2.1 and 5.6.2.2.

Table 5.2b—Permissible Plate Materials and Allowable Stresses (USC)

Plate Specification	Grade	Nominal Plate Thickness t in.	Minimum Yield Strength psi	Minimum Tensile Strength psi	Product Design Stress S_d psi	Hydrostatic Test Stress S_t psi
ASTM Specifications						
A283	C		30,000	55,000	20,000	22,500
A285	C		30,000	55,000	20,000	22,500
A131	A, B		34,000	58,000	22,700	24,900
A36	—		36,000	58,000	23,200	24,900
A131	EH 36		51,000	71,000[a]	28,400	30,400
A573	58		32,000	58,000	21,300	24,000
A573	65		35,000	65,000	23,300	26,300
A573	70		42,000	70,000[a]	28,000	30,000
A516	55		30,000	55,000	20,000	22,500
A516	60		32,000	60,000	21,300	24,000
A516	65		35,000	65,000	23,300	26,300
A516	70		38,000	70,000	25,300	28,500
A662	B		40,000	65,000	26,000	27,900
A662	C		43,000	70,000[a]	28,000	30,000
A537	1	$t \le 2^1/_2$ $2^1/_2 < t \le 4$	50,000 45,000	70,000[a] 65,000[b]	28,000 26,000	30,000 27,900
A537	2	$t \le 2^1/_2$ $2^1/_2 < t \le 4$	60,000 55,000	80,000[a] 75,000[b]	32,000 30,000	34,300 32,100
A633	C, D	$t \le 2^1/_2$ $2^1/_2 < t \le 4$	50,000 46.000	70,000[a] 65,000[b]	28,000 26,000	30,000 27,900
A678	A		50,000	70,000[a]	28,000	30,000
A678	B		60,000	80,000[a]	32,000	34,300
A737	B		50,000	70,000[a]	28,000	30,000
A841	Class 1		50,000	70,000[a]	28,000	30,000
A841	Class 2		60,000	80,000[a]	32,000	34,300

Table 5.2b—Permissible Plate Materials and Allowable Stresses (USC) (Continued)

Plate Specification	Grade	Nominal Plate Thickness t in.	Minimum Yield Strength psi	Minimum Tensile Strength psi	Product Design Stress S_d psi	Hydrostatic Test Stress S_t psi
CSA Specifications						
G40.21	38W		38,000	60,000	24,000	25,700
G40.21	38WT		38,000	60,000	24,000	25,700
G40.21	44W		44,000	65,000	26,000	27,900
G40.21	44WT		44,000	65,000	26,000	27,900
G40.21	50W		50,000	65,000	26,000	27,900
G40.21	50WT	$t \le 2^1/_2$	50,000	70,000[a]	28,000	30,000
		$2^1/_2 < t \le 4$	46,000	70,000[a]	28,000	30,000
National Standards						
	235		34,000	52,600	20,000	22,500
	250		36,000	58,300	22,700	25,000
	275		40,000	62,600	24,000	26,800
ISO Specifications						
ISO 630	E275C, D	$t \le {}^5/_8$	39,900	59,500	23,800	25,500
		${}^5/_8 < t \le 1^1/_2$	38,400	59,500	23,800	25,500
	E355C, D	$t \le {}^5/_8$	51,500	71,000[a]	28,400	30,400
		${}^5/_8 < t \le 1^1/_2$	50,000	71,000[a]	28,400	30,400
		$1^1/_2 < t \le 2$	48,600	71,000[a]	28,400	30,400
EN Specifications						
EN 10025	S 275J0, J2	$t \le {}^5/_8$	39,900	59,500	23,800	25,500
		${}^5/_8 < t \le 1^1/_2$	38,400	59,500	23,800	25,500
	S 355J0, J2, K2	$t \le {}^5/_8$	51,500	68,100[a]	27,200	29,200
		${}^5/_8 < t \le 1^1/_2$	50,000	68,100[a]	27,200	29,200
		$1^1/_2 < t \le 2$	48,600	68,100[a]	27,200	29,200

[a] By agreement between the Purchaser and the Manufacturer, the tensile strength of ASTM A537M, Class 2, A678M, Grade B, and A841M, Class 2 materials may be increased to 85,000 psi minimum and 100,000 psi maximum. The tensile strength of the other listed materials may be increased to 75,000 psi minimum and 90,000 psi maximum. When this is done, the allowable stresses shall be determined as stated in 5.6.2.1 and 5.6.2.2.

[b] By agreement between the Purchaser and the Manufacturer, the tensile strength of ASTM A537M, Class 2 materials may be increased to 80,000 psi minimum and 100,000 psi maximum. The tensile strength of the other listed materials may be increased to 70,000 psi minimum and 90,000 psi maximum. When this is done, the allowable stresses shall be determined as stated in 5.6.2.1 and 5.6.2.2.

5.6.2.3 Annex A permits an alternative shell design with a fixed allowable stress of 145 MPa (21,000 lbf/in.^{2}) and a joint efficiency factor of 0.85 or 0.70. This design may only be used for tanks with shell thicknesses less than or equal to 13 mm ($^1/_2$ in.).

5.6.2.4 Structural design stresses shall conform to the allowable working stresses given in 5.10.3.

5.6.3 Calculation of Thickness by the 1-Foot Method

5.6.3.1 The 1-foot method calculates the thicknesses required at design points 0.3 m (1 ft) above the bottom of each shell course. Annex A permits only this design method. This method shall not be used for tanks larger than 61 m (200 ft) in diameter.

• **5.6.3.2** The required minimum thickness of shell plates shall be the greater of the values computed by the following formulas:

In SI units:

$$t_d = \frac{4.9D(H-0.3)G}{S_d} + CA$$

$$t_t = \frac{4.9D(H-0.3)}{S_t}$$

where

t_d is the design shell thickness, in mm;

t_t is the hydrostatic test shell thickness, in mm;

D is the nominal tank diameter, in m (see 5.6.1.1, Note 1);

• H is the design liquid level, in m;

= height from the bottom of the course under consideration to the top of the shell including the top angle, if any; to the bottom of any overflow that limits the tank filling height; or to any other level specified by the Purchaser, restricted by an internal floating roof, or controlled to allow for seismic wave action;

• G is the design specific gravity of the liquid to be stored, as specified by the Purchaser;

• CA is the corrosion allowance, in mm, as specified by the Purchaser (see 5.3.2);

S_d is the allowable stress for the design condition, in MPa (see 5.6.2.1);

S_t is the allowable stress for the hydrostatic test condition, in MPa (see 5.6.2.2).

In USC units:

$$t_d = \frac{2.6D(H-1)G}{S_d} + CA$$

$$t_t = \frac{2.6D(H-1)}{S_t}$$

where

t_d is the design shell thickness, in inches;

t_t is the hydrostatic test shell thickness, in inches;

D is the nominal tank diameter, in ft (see 5.6.1.1, Note 1);

- H is the design liquid level, in ft:

  is the height from the bottom of the course under consideration to the top of the shell including the top angle, if any; to the bottom of any overflow that limits the tank filling height; or to any other level specified by the Purchaser, restricted by an internal floating roof, or controlled to allow for seismic wave action,

- G is the design specific gravity of the liquid to be stored, as specified by the Purchaser;

- CA is the corrosion allowance, in inches, as specified by the Purchaser (see 5.3.2);

S_d is the allowable stress for the design condition, in lbf/in.^{2} (see 5.6.2.1);

S_t is the allowable stress for the hydrostatic test condition, in lbf/in.^{2} (see 5.6.2.2).

5.6.4 Calculation of Thickness by the Variable-Design-Point Method

NOTE This procedure normally provides a reduction in shell-course thicknesses and total material weight, but more important is its potential to permit construction of larger diameter tanks within the maximum plate thickness limitation. For background information, see L.P. Zick and R.V. McGrath, "Design of Large Diameter Cylindrical Shells."[20]

- **5.6.4.1** Design by the variable-design-point method gives shell thicknesses at design points that result in the calculated stresses being relatively close to the actual circumferential shell stresses. This method may only be used when the Purchaser has not specified that the 1-foot method be used and when the following is true:

In SI units:

$$\frac{L}{H} \leq \frac{1000}{6}$$

where

L equals $(500\ Dt)^{0.5}$, in mm;

D is the tank diameter, in m;

t is the bottom-course corroded shell thickness, in mm;

H is the maximum design liquid level (see 5.6.3.2), in m.

[20] L.P. Zick and R.V. McGrath, "Design of Large Diameter Cylindrical Shells," *Proceedings*—Division of Refining, American Petroleum Institute, New York, 1968, Volume 48, pp. 1114 – 1140.

In USC units:

$$\frac{L}{H} \leq 2$$

where

L equals $(6\ Dt\ )^{0.5}$, in inches;

D is the tank diameter, in ft;

t is the bottom-course corroded shell thickness, in inches;

H is the maximum design liquid level (see 5.6.3.2), in ft.

5.6.4.2 The minimum plate thicknesses for both the design condition and the hydrostatic test condition shall be determined as outlined. Complete, independent calculations shall be made for all of the courses for the design condition and for the hydrostatic test condition. The required shell thickness for each course shall be the greater of the design shell thickness plus any corrosion allowance or the hydrostatic test shell thickness, but the total shell thickness shall not be less than the shell thickness required by 5.6.1.1, 5.6.1.3, and 5.6.1.4. When a greater thickness is used for a shell course, the greater thickness may be used for subsequent calculations of the thicknesses of the shell courses above the course that has the greater thickness, provided the greater thickness is shown as the required design thickness on the Manufacturer's drawing (see W.3).

5.6.4.3 To calculate the bottom-course thicknesses, preliminary values t_{pd} and t_{pt} for the design and hydrostatic test conditions shall first be calculated from the formulas in 5.6.3.2.

5.6.4.4 The bottom-course thicknesses t_{1d} and t_{1t} for the design and hydrostatic test conditions shall be calculated using the following formulas:

In SI units:

$$t_{1d} = \left(1.06 - \frac{0.0696D}{H}\sqrt{\frac{HG}{S_d}}\right)\left(\frac{4.9HDG}{S_d}\right) + CA$$

In USC units:

$$t_{1d} = \left(1.06 - \frac{0.463D}{H}\sqrt{\frac{HG}{S_d}}\right)\left(\frac{2.6HDG}{S_d}\right) + CA$$

NOTE For the design condition, t_{1d} need not be greater than t_{pd}.

In SI units:

$$t_{1t} = \left(1.06 - \frac{0.0696D}{H}\sqrt{\frac{H}{S_t}}\right)\left(\frac{4.9HD}{S_t}\right)$$

In USC units:

$$t_{1t} = \left(1.06 - \frac{0.463D}{H}\sqrt{\frac{H}{S_t}}\right)\left(\frac{2.6HD}{S_t}\right)$$

NOTE For the hydrostatic test condition, t_{1t} need not be greater than t_{pt}.

5.6.4.5 To calculate the second-course thicknesses for both the design condition and the hydrostatic test condition, the value of the following ratio shall be calculated for the bottom course:

$$\frac{h_1}{(rt_1)^{0.5}}$$

where

h_1 is the height of the bottom shell course, in mm (in.);

r is the nominal tank radius, in mm (in.);

t_1 is the calculated corroded thickness of the bottom shell course, in mm (in.), used to calculate t_2 (design). The calculated hydrostatic thickness of the bottom shell course shall be used to calculate t_2 (hydrostatic test).

If the value of the ratio is less than or equal to 1.375:

$$t_2 = t_1$$

If the value of the ratio is greater than or equal to 2.625:

$$t_2 = t_{2a}$$

If the value of the ratio is greater than 1.375 but less than 2.625:

$$t_2 = t_{2a} + (t_1 - t_{2a})\left[2.1 - \frac{h_1}{1.25(rt_1)^{0.5}}\right]$$

where

t_2 is the minimum design thickness of the second shell course, in mm (in.);

t_{2a} is the corroded thickness of the second shell course, in mm (in.), as calculated for an upper shell course as described in 5.6.4.6, 5.6.4.7, and 5.6.4.8. In calculating second shell course thickness (t_2) for design case and hydrostatic test case, applicable values of t_{2a} and $t_1$shall be used.

The preceding formula for t_2 is based on the same allowable stress being used for the design of the bottom and second courses. For tanks where the value of the ratio is greater than or equal to 2.625, the allowable stress for the second course may be lower than the allowable stress for the bottom course when the methods described in 5.6.4.6 through 5.6.4.8 are used.

5.6.4.6 To calculate the upper-course thicknesses for both the design condition and the hydrostatic test condition, a preliminary value t_u for the upper-course corroded thickness shall be calculated using the formulas in 5.6.3.2, and then the distance x of the variable design point from the bottom of the course shall be calculated using the lowest value obtained from the following:

In SI units:

$$x_1 = 0.61\,(rt_u)^{0.5} + 320\,CH$$

$$x_2 = 1000\,CH$$

$$x_3 = 1.22\,(rt_u)^{0.5}$$

where

t_u is the corroded thickness of the upper course at the girth joint, in mm;

C equals $[K^{0.5}\,(K-1)]/(1+K^{1.5})$;

K equals t_L / t_u;

t_L is the corroded thickness of the lower course at the girth joint, in mm;

- H is the design liquid level (see 5.6.3.2), in m.

In US Customary units:

$$x_1 = 0.61\,(rt_u)^{0.5} + 3.84\,CH$$

$$x_2 = 12\,CH$$

$$x_3 = 1.22\,(rt_u)^{0.5}$$

where

t_u is the corroded thickness of the upper course at the girth joint, in inches;

C equals $[K^{0.5}\,(K-1)]/(1+K^{1.5})$;

K equals t_L / t_u;

t_L is the corroded thickness of the lower course at the girth joint, in inches;

- H is the design liquid level (see 5.6.3.2), in ft.

5.6.4.7 The minimum thickness t_x for the upper shell courses shall be calculated for both the design condition (t_{dx}) and the hydrostatic test condition (t_{tx}) using the minimum value of *x* obtained from 5.6.4.6:

In SI units:

$$t_{dx} = \frac{4.9D\left(H - \frac{x}{1000}\right)G}{S_d} + CA$$

$$t_{tx} = \frac{4.9D\left(H - \frac{x}{1000}\right)}{S_t}$$

In USC units:

$$t_{dx} = \frac{2.6D\left(H - \frac{x}{12}\right)G}{S_d} + CA$$

$$t_{tx} = \frac{2.6D\left(H - \frac{x}{12}\right)}{S_t}$$

5.6.4.8 The steps described in 5.6.4.6 and 5.6.4.7 shall be repeated using the calculated value of t_x as t_u until there is little difference between the calculated values of t_x in succession (repeating the steps twice is normally sufficient). Repeating the steps provides a more exact location of the design point for the course under consideration and, consequently, a more accurate shell thickness.

5.6.4.9 There are two examples provided in Annex K. Example #1 are step-by-step calculations illustrating an application of the variable-design-point method to a tank with a diameter of 85 m (280 ft) and a height of 19.2 m (64 ft) to determine shell-plate thicknesses for the first three courses for the hydrostatic test condition only. Example #2 demonstrates the variable-design-point design method in US Customary units for a tank with a diameter of 280 ft and a height of 40 ft with varying corrosion allowances and varying materials for both the design and hydrostatic test conditions.

5.6.5 Calculation of Thickness by Elastic Analysis

For tanks where L/H is greater than 1000/6 (2 in USC units), the selection of shell thicknesses shall be based on an elastic analysis that shows the calculated circumferential shell stresses to be below the allowable stresses given in Table 5.2a and Table 5.2b. The boundary conditions for the analysis shall assume a fully plastic moment caused by yielding of the plate beneath the shell and zero radial growth.

5.7 Shell Openings

5.7.1 General

5.7.1.1 The following requirements for shell openings are intended to restrict the use of appurtenances to those providing for attachment to the shell by welding. See Figure 5.6.

5.7.1.2 The shell opening designs described in this standard are required, except for alternative designs allowed in 5.7.1.8.

5.7.1.3 Flush-type cleanout fittings and flush-type shell connections shall conform to the designs specified in 5.7.7 and 5.7.8.

- **5.7.1.4** When a size intermediate to the sizes listed in Tables 5.3a through 5.12b is specified by the Purchaser, the construction details and reinforcements shall conform to the next larger opening listed in the tables. The size of the opening or tank connection shall not be larger than the maximum size given in the appropriate table.

5.7.1.5 Openings near the bottom of a tank shell will tend to rotate with vertical bending of the shell under hydrostatic loading. Shell openings in this area that have attached piping or other external loads shall be reinforced not only for the static condition but also for any loads imposed on the shell connections by the restraint of the attached piping to the shell rotation. The external loads shall be minimized, or the shell connections shall be relocated outside the rotation area. Annex P provides a method for evaluating openings that conform to Table 5.6a and Table 5.6b.

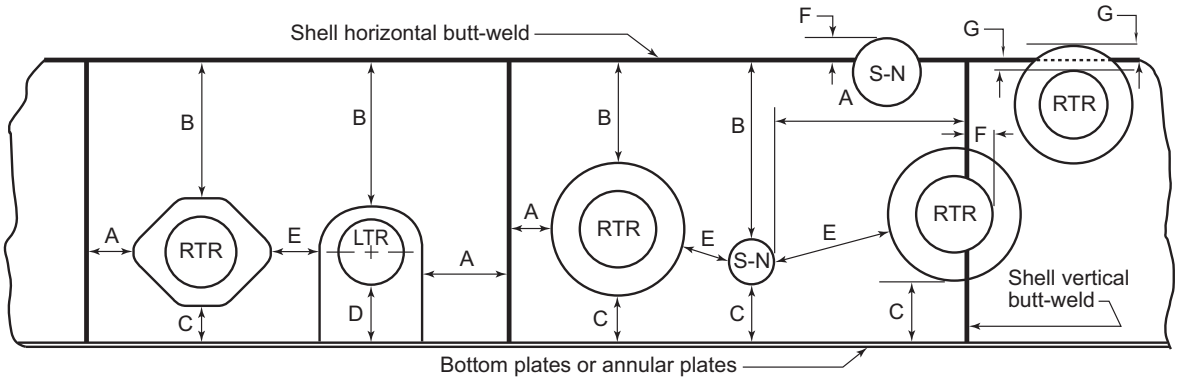

KEY

RTR = Regular-Type Reinforced Opening (nozzle or manhole) with diamond or circular shape reinforcing plate or insert plate that does not extend to the bottom (see Figure 5.7a and Figure 5.8).

LTR = Low-Type Reinforced Opening (nozzle or manhole) using tombstone type reinforcing plate or insert plate that extends to the bottom [see Figure 5.8, Detail (a) and Detail (b)].

S-N = Shell openings with neither a reinforcing plate nor with a thickened insert plate (i.e. integrally reinforced shell openings; or openings not requiring reinforcing).

Variables		**Reference**	**Minimum Dimension Between Weld Toes or Weld Centerline** (Notes 1 and 3)						
Shell *t*	**Condition**	**Paragraph Number**	**A (2)**	**B (2)**	**C (2)**	**D (3)**	**E (2)**	**F (4)**	**G (4)**
$t \le 12.5$ mm ($t \le 1/2$ in.)	As welded or PWHT	5.7.3.2	150 mm (6 in.)	75 mm (3 in.) or $2^1/_2 t$			75 mm (3 in.) or $2^1/_2 t$		
		5.7.3.3			75 mm (3 in.) or $2^1/_2 t$				
		5.7.3.3			75 mm (3 in.) for S-N				
		5.7.3.3				Table 5.6a and Table 5.6b			
		• 5.7.3.4						$8t$ or $1/2\ r$	
		• 5.7.3.4							$8t$
$t > 12.5$ mm ($t > 1/2$ in.)	As Welded	5.7.3.1.a	$8W$ or 250 mm (10 in.)	$8W$ or 250 mm (10 in.)					
		5.7.3.1.b					$8W$ or 150 mm (6 in.)		
		5.7.3.3			$8W$ or 250 mm (10 in.)				
		5.7.3.3			75 mm (3 in.) for S-N				
		5.7.3.3				Table 5.6a and Table 5.6b		$8t$ or $1/2\ r$	
		• 5.7.3.4							$8t$
		• 5.7.3.4							
$t > 12.5$ mm ($t > 1/2$ in.)	PWHT	5.7.3.2	150 mm (6 in.)	75 mm (3 in.) or $2^1/_2 t$			75 mm (3 in.) or $2^1/_2 t$		
		5.7.3.3			75 mm (3 in.) or $2^1/_2 t$				
		5.7.3.3			75 mm (3 in.) for S-N				
		5.7.3.3				Table 5.6a and Table 5.6b		$8t$ or $1/2\ r$	
		• 5.7.3.4							$8t$
		• 5.7.3.4							

NOTE 1 If two requirements are given, the minimum spacing is the greater value, except for dimension "*F*." See Note 4.

NOTE 2 t = shell thickness. $8W$ = 8 times the largest weld size for reinforcing plate or insert plate periphery weld (fillet or butt-weld) from the toe of the periphery weld to the centerline of the shell butt-weld.

NOTE 3 D = spacing distance established by minimum elevation for low-type reinforced openings from Table 5.6a and Table 5.6b, column 9.

NOTE 4 Purchaser option to allow shell openings to be located in horizontal or vertical shell butt-welds. See Figure 5.9. t = shell thickness, r = radius of opening. Minimum spacing for dimension *F* is the lesser of $8t$ or $1/2\ r$.

Figure 5.6—Minimum Weld Requirements for Openings in Shells According to 5.7.3

Table 5.3a—Thickness of Shell Manhole Cover Plate and Bolting Flange (SI)

Column 1	Column 2	Column 3	Column 4	Column 5	Column 6	Column 7	Column 8	Column 9	Column 10
Max. Design Liquid Level m H	Equivalent Pressure[a] kPa	Minimum Thickness of Cover Plate[b] (t_c), mm				Minimum Thickness of Bolting Flange After Finishing[b] (t_f), mm			
		500 mm Manhole	600 mm Manhole	750 mm Manhole	900 mm Manhole	500 mm Manhole	600 mm Manhole	750 mm Manhole	900 mm Manhole
5.2	51	8	10	11	13	6	6	8	10
6.7	66	10	11	13	14	6	8	10	11
8.0	78	10	11	14	16	6	8	11	13
9.9	97	11	13	16	18	8	10	13	14
11.1	109	13	14	16	19	10	11	13	16
13.4	131	13	14	18	21	10	11	14	18
16.1	158	14	16	19	22	11	13	16	19
18.6	182	16	18	21	24	13	14	18	21
22.9	224	18	19	24	25	13	14	18	24

[a] Equivalent pressure is based on water loading.

[b] For addition of corrosion allowance, see 5.7.5.2.

[c] Cover Plate and Flange thickness given can be used on Manholes dimensioned to ID or OD.

NOTE See Figure 5.7a.

Table 5.3b—Thickness of Shell Manhole Cover Plate and Bolting Flange (USC)

Column 1	Column 2	Column 3	Column 4	Column 5	Column 6	Column 7	Column 8	Column 9	Column 10
Max. Design Liquid Level ft H	Equivalent Pressure[a] lbf/in.^{2}	Minimum Thickness of Cover Plate[b] (t_c), in.				Minimum Thickness of Bolting Flange After Finishing[b] (t_f), in.			
		20 in. Manhole	24 in. Manhole	30 in. Manhole	36 in. Manhole	20 in. Manhole	24 in. Manhole	30 in. Manhole	36 in. Manhole
17.1	7.4	5/16	3/8	7/16	1/2	1/4	1/4	5/16	3/8
21.9	9.5	3/8	7/16	1/2	9/16	1/4	5/16	3/8	7/16
26.1	11.3	3/8	7/16	9/16	5/8	1/4	5/16	7/16	1/2
32.6	14.1	7/16	1/2	5/8	11/16	5/16	3/8	1/2	9/16
36.5	15.8	1/2	9/16	5/8	3/4	3/8	7/16	1/2	5/8
43.9	19	1/2	9/16	11/16	13/16	3/8	7/16	9/16	11/16
52.9	22.9	9/16	5/8	3/4	7/8	7/16	1/2	5/8	3/4
61.0	26.4	5/8	11/16	13/16	15/16	1/2	9/16	11/16	13/16
75.1	32.5	11/16	3/4	15/16	1	1/2	9/16	11/16	15/16

[a] Equivalent pressure is based on water loading.

[b] For addition of corrosion allowance, see 5.7.5.2.

[c] Cover Plate and Flange thickness given can be used on Manholes dimensioned to ID or OD.

NOTE See Figure 5.7a.

Table 5.4a—Dimensions for Shell Manhole Neck Thickness (SI)

Dimensions in millimeters

Thickness of Shell (t) [a]	Minimum Neck Thickness (t_n) [b]			
	For Manhole Diameter 500 mm	For Manhole Diameter 600 mm	For Manhole Diameter 750 mm	For Manhole Diameter 900 mm
5	5	5	5	5
6	6	6	6	6
8	6	6	8	8
10	6	6	8	10
11	6	6	8	10
12.5	6	6	8	10
14	6	6	8	10
16	6	6	8	10
18	6	6	8	10
19	6	6	8	10
21	8	6	8	10
22	10	8	8	10
24	11	11	11	11
25	11	11	11	11
27	11	11	11	11
28	13	13	13	13
30	14	14	14	14
32	16	14	14	14
33	16	16	16	16
35	17	16	16	16
36	17	17	17	17
38	20	20	20	20
40	21	21	21	21
41	21	21	21	21
43	22	22	22	22
45	22	22	22	22

[a] If a shell plate thicker than required is used for the product and hydrostatic loading (see 5.6), the excess shell-plate thickness, within a vertical distance both above and below the centerline of the hole in the tank shell plate equal to the vertical dimension of the hole in the tank shell plate, may be considered as reinforcement, and the thickness T of the manhole reinforcing plate may be decreased accordingly. In such cases, the reinforcement and the attachment welding shall conform to the design limits for reinforcement of shell openings specified in 5.7.2.

[b] The minimum neck thickness shall be the required corroded thickness of the shell plate or the minimum flange thickness of the bolting flange (see Table 5.3a), whichever is thinner. If the neck thickness is greater than the required minimum, the manhole reinforcing plate thickness may be deceased accordingly. In such cases the reinforcement and the attachment welding shall conform to the design limits of the reinforcement of the shell opening in 5.7.2.

Table 5.4b—Dimensions for Shell Manhole Neck Thickness (USC)

Dimensions in inches

Thickness of Shell (t) [a]	Minimum Neck Thickness (t_n) [b]			
	For Manhole Diameter 20 in.	For Manhole Diameter 24 in.	For Manhole Diameter 30 in.	For Manhole Diameter 36 in.
3/16	3/16	3/16	3/16	3/16
1/4	1/4	1/4	1/4	1/4
5/16	1/4	1/4	5/16	5/16
3/8	1/4	1/4	5/16	3/8
7/16	1/4	1/4	5/16	3/8
1/2	1/4	1/4	5/16	3/8
9/16	1/4	1/4	5/16	3/8
5/8	1/4	1/4	5/16	3/8
11/16	1/4	1/4	5/16	3/8
3/4	1/4	1/4	5/16	3/8
13/16	5/16	1/4	5/16	3/8
7/8	3/8	5/16	5/16	3/8
15/16	7/16	7/16	7/16	7/16
1	7/16	7/16	7/16	7/16
1 1/16	7/16	7/16	7/16	7/16
1 1/8	1/2	1/2	1/2	1/2
1 3/16	9/16	9/16	9/16	9/16
1 5/16	5/8	9/16	9/16	9/16
1 3/8	5/8	5/8	5/8	5/8
1 3/8	11/16	5/8	5/8	5/8
1 7/16	11/16	11/16	11/16	11/16
1 1/2	3/4	3/4	3/4	3/4
1 9/16	13/16	13/16	13/16	13/16
1 5/8	13/16	13/16	13/16	13/16
1 11/16	7/8	7/8	7/8	7/8
1 3/4	7/8	7/8	7/8	7/8

[a] If a shell plate thicker than required is used for the product and hydrostatic loading (see 5.6), the excess shell-plate thickness, within a vertical distance both above and below the centerline of the hole in the tank shell plate equal to the vertical dimension of the hole in the tank shell plate, may be considered as reinforcement, and the thickness T of the manhole reinforcing plate may be decreased accordingly. In such cases, the reinforcement and the attachment welding shall conform to the design limits for reinforcement of shell openings specified in 5.7.2.

[b] The minimum neck thickness shall be the required corroded thickness of the shell plate or the minimum flange thickness of the bolting flange (see Table 5.3b), whichever is thinner. If the neck thickness is greater than the required minimum, the manhole reinforcing plate thickness may be deceased accordingly. In such cases the reinforcement and the attachment welding shall conform to the design limits of the reinforcement of the shell opening in 5.7.2.

5.7.1.6 Sheared or oxygen-cut surfaces on manhole necks, nozzle necks, reinforcing plates, and shell-plate openings shall be made uniform and smooth, with the corners rounded except where the surfaces are fully covered by attachment welds.

5.7.1.7 Shell openings may be reinforced by the use of an insert plate per Figure 5.7b. The insert plate may have the same thickness as an adjacent shell plate or may be thicker to provide reinforcing. A rectangular insert plate shall have rounded corners (except for edges terminating at the tank bottom or at joints between shell courses) with a radius which is greater than or equal to the larger of 150 mm (6 in.) or $6t$ where t is the thickness of the shell course containing the insert plate. The insert plate may contain multiple shell openings. The thickness and dimensions of insert plate shall provide the reinforcing required per 5.7.2. The weld spacing shall meet requirements of 5.7.3. The periphery of insert plates shall have a 1:4 tapered transition to the thickness of the adjacent shell plates when the insert plate thickness exceeds the adjacent shell thickness by more than 3 mm ($^1/_8$ in.).

• **5.7.1.8** The shape and dimensions of the shell opening reinforcement, illustrated in Figure 5.7a, Figure 5.7b,and Figure 5.8 and dimensioned in the related tables may be altered as long as the reinforcement meets the area, welding, and weld spacing requirements outlined in 5.7.2 and 5.7.3. For reinforcing plates greater than $^1/_2$ in. thick, with approval of the Purchaser, reinforcement and welding (excluding weld spacing) of shell openings that comply with API 620, Section 5 are acceptable. These statements of permissible alternatives of shell opening reinforcement and welding do not apply to flush-type cleanout fittings, flush-type shell connections or similar configurations.

Table 5.5a—Dimensions for Bolt Circle Diameter D_b and Cover Plate Diameter D_c for Shell Manholes (SI)

Dimensions in millimeters

Column 1	Column 2	Column 3
Manhole Diameter OD	**Bolt Circle Diameter D_b**	**Cover Plate Diameter D_c**
500	667	730
600	768	832
750	921	984
900	1073	1137
NOTE See Figure 5.7a.		

5.7.1.9 The flange facing shall be suitable for the gasket and bolting employed. Gaskets shall be selected to meet the service environment so that the required seating load is compatible with the flange rating and facing, the strength of the flange, and its bolting (see 4.9).

5.7.2 Reinforcement and Welding

5.7.2.1 Openings in tank shells larger than required to accommodate a NPS 2 flanged or threaded nozzle shall be reinforced. The minimum cross-sectional area of the required reinforcement shall not be less than the product of the vertical diameter of the hole cut in the shell and the nominal plate thickness, but when calculations are made for the maximum required thickness considering all design and hydrostatic test load conditions, the required thickness may be used in lieu of the nominal plate thickness. The cross-sectional area of the reinforcement shall be measured vertically, coincident with the diameter of the opening.

• **5.7.2.2** The only shell openings that may utilize welds having less than full penetration through the shell are those that do not require reinforcement and those that utilize a thickened insert plate as shown in Figure 5.7b and Figure

Table 5.5b—Dimensions for Bolt Circle Diameter D_b and Cover Plate Diameter D_c for Shell Manholes (USC)

Dimensions in inches

Column 1	Column 2	Column 3
Manhole Diameter OD	**Bolt Circle Diameter D_b**	**Cover Plate Diameter D_c**
20	$26\frac{1}{4}$	$28\frac{3}{4}$
24	$30\frac{1}{4}$	$32\frac{3}{4}$
30	$36\frac{1}{4}$	$38\frac{3}{4}$
36	$42\frac{1}{4}$	$44\frac{3}{4}$
NOTE See Figure 5.7a.		

5.8. However, any openings listed in Table 3 of the Data Sheet that are marked “yes” under “Full Penetration on Openings” shall utilize welds that fully penetrate the shell and the reinforcement, if used.

5.7.2.3 Except for flush-type openings and connections, all effective reinforcements shall be made within a distance above and below the centerline of the shell opening equal to the vertical dimension of the hole in the tank shell plate. Reinforcement may be provided by any one or any combination of the following:

a) The attachment flange of the fitting.

• b) The reinforcing plate. Reinforcing plates for manholes, nozzles, and other attachments shall be of the same nominal composition (i.e. same ASME P-number and Group Number) as the tank part to which they are attached, unless approved otherwise by the Purchaser.

c) The portion of the neck of the fitting that may be considered as reinforcement according to 5.7.2.4.

d) Excess shell-plate thickness. Reinforcement may be provided by any shell-plate thickness in excess of the thickness required by the governing load condition within a vertical distance above and below the centerline of the hole in the shell equal to the vertical dimension of the hole in the tank shell plate as long as the extra shell-plate thickness is the actual plate thickness used less the required thickness, calculated at the applicable opening, considering all load conditions and the corrosion allowance.

e) The material in the nozzle neck. The strength of the material in the nozzle neck used for reinforcement should preferably be the same as the strength of the tank shell, but lower strength material is permissible as reinforcement as long as the neck material has minimum specified yield and tensile strengths not less than 70 % and 80 %, respectively, of the shell-plate minimum specified yield and tensile strengths. When the material strength is greater than or equal to the 70 % and 80 % minimum values, the area in the neck available for reinforcement shall be reduced by the ratio of the allowable stress in the neck, using the governing stress factors, to the allowable stress in the attached shell plate. No credit may be taken for the additional strength of any reinforcing material that has a higher allowable stress than that of the shell plate. Neck material that has a yield or tensile strength less than the 70 % or 80 % minimum values may be used, provided that no neck area is considered as effective reinforcement.

5.7.2.4 The following portions of the neck of a fitting may be considered part of the area of reinforcement, except where prohibited by 5.7.2.3, Item e:

a) The portion extending outward from the outside surface of the tank shell plate to a distance equal to four times the neck-wall thickness or, if the neck-wall thickness is reduced within this distance, to the point of transition.

500 mm (20 in.) and 600 mm (24 in.) shell manholes: twenty-eight 20 mm-diameter (3/4 in.) bolts in 23 mm (7/8 in.) holes
750 mm (30 in.) and 900 mm (36 in.) shell manholes: forty-two 20 mm-diameter (3/4 in.) bolts in 23 mm (7/8 in.) holes
(Bolt holes shall straddle the flange vertical centerline.)

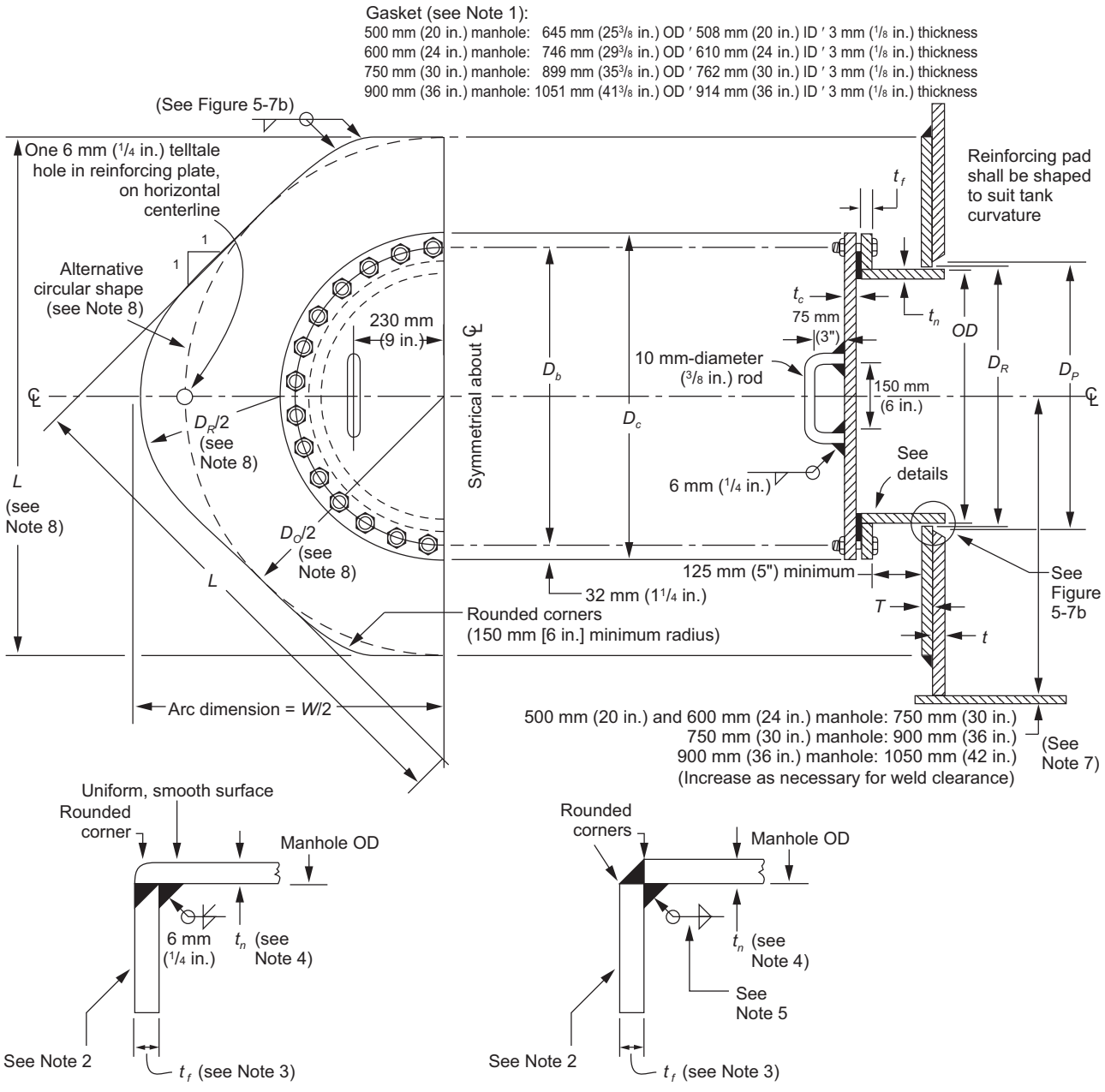

Detail a **Detail b**

NOTES

1. Gasket material shall be specified by the Purchaser. See 5.7.5.4.
2. The gasketed face shall be machine-finished to provide a minimum gasket-bearing width of 19 mm (3/4 in.).
3. See Table 5.3a and Table 5.3b.
4. See Table 5.4a and Table 5.4b.
5. The size of the weld shall equal the thickness of the thinner member joined.
6. The shell nozzles shown in Figure 5.8 may be substituted for manholes.
7. The minimum centerline elevations allowed by Table 5.6a, Table 5.6b, and Figure 5.6 may be used when approved by the Purchaser.
8. For dimensions for OD, D_R, D_o, L, and W, see Table 5.6a and Table 5.6b, Columns 2, 4, 5, and 6. For Dimension D_P see Table 5.7a and Table 5.7b, Column 3.
9. At the option of the Manufacturer, the manhole ID may be set to the OD dimension listed in Table 5.6a and Table 5.6b, Column 2. Reinforcement area and weld spacing must meet 5.7.2 and 5.7.3 requirements respectively.

Table 5.7a—Shell Manhole

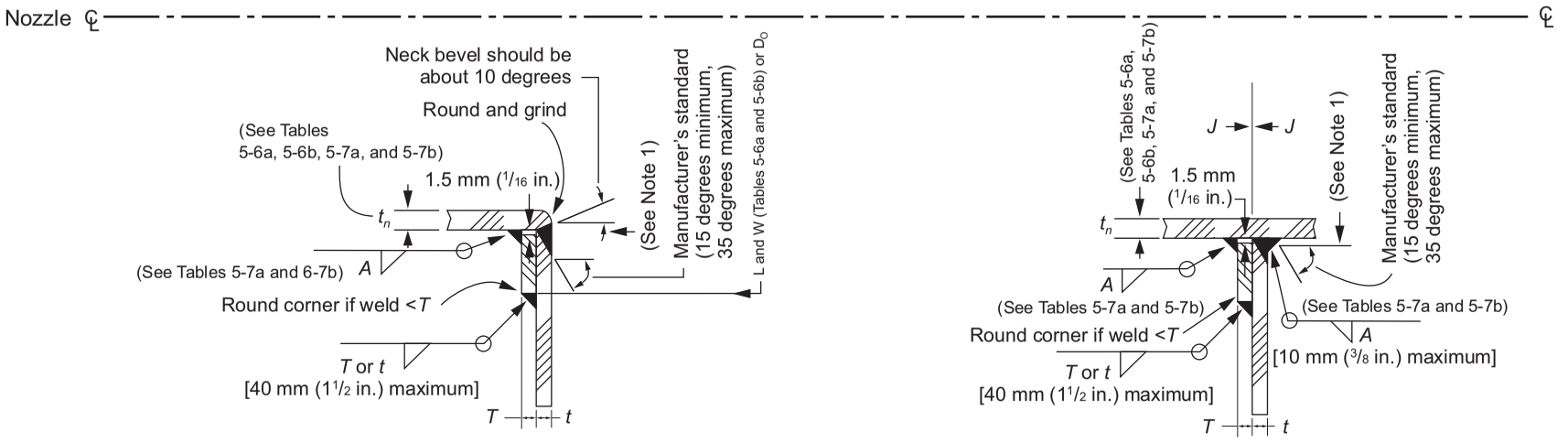

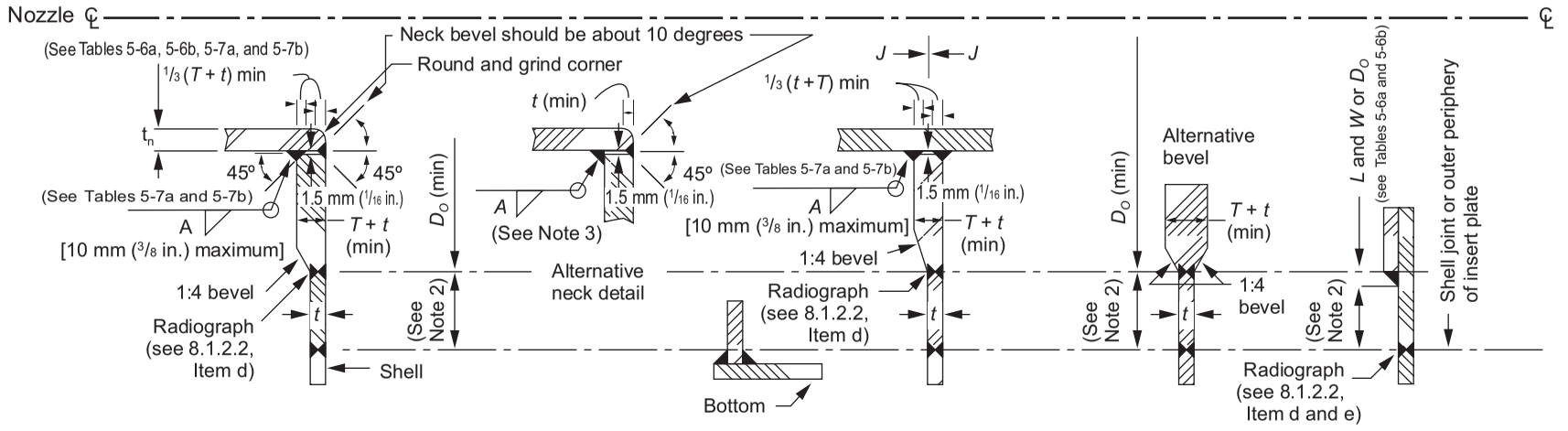

Insert-type Reinforcement for Manholes and Nozzles

Notes:

1. See Table 5.7a and Table 5.7b, Column 3, for the shell cutout, which shall not be less than the outside diameter of the neck plus 13 mm (1/2) in.
2. See 5.7.3 for minimum spacing of welds at opening connections.
3. The weld size shall be either A (from Table 5.7a and Table 5.7b, based on t) or t_n (minimum neck thickness from Table 5.4a, Table 5.4b, Table 5.6a, Table 5.6b, Table 5.7a and Table 5.7b), whichever is greater.
4. Other permissible insert details are shown in Figure 5.8 of API Standard 620. The reinforcement area shall conform to 5.7.2.
5. Dimensions and weld sizes that are not shown are the same as those given in Figure 5.7a and Table 5.4a through Table 5.8b.
6. ● Details of welding bevels may vary from those shown if agreed to by the Purchaser.

Figure 5.7b—Details of Shell Manholes and Nozzles

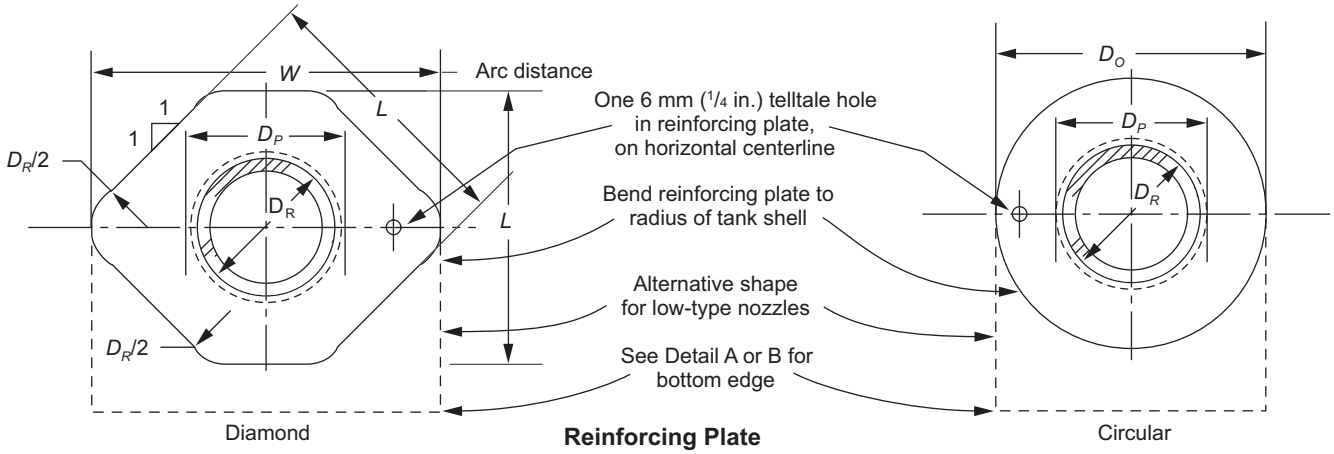

Reinforcing Plate

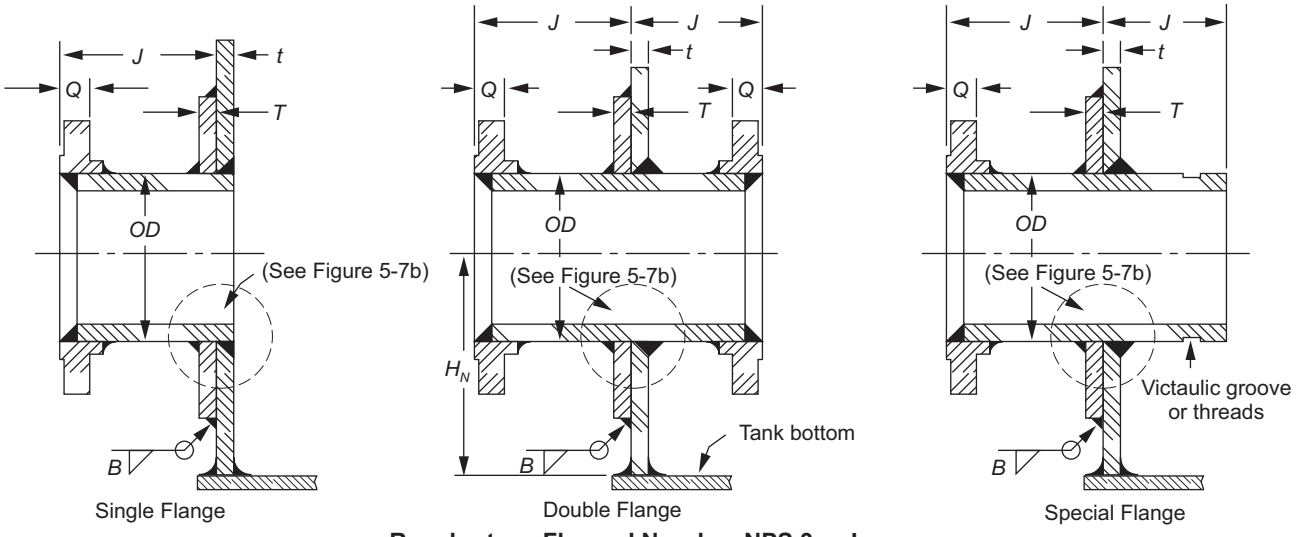

Regular-type Flanged Nozzles, NPS 3 or Larger
(Bolt holes shall straddle flange centerlines)

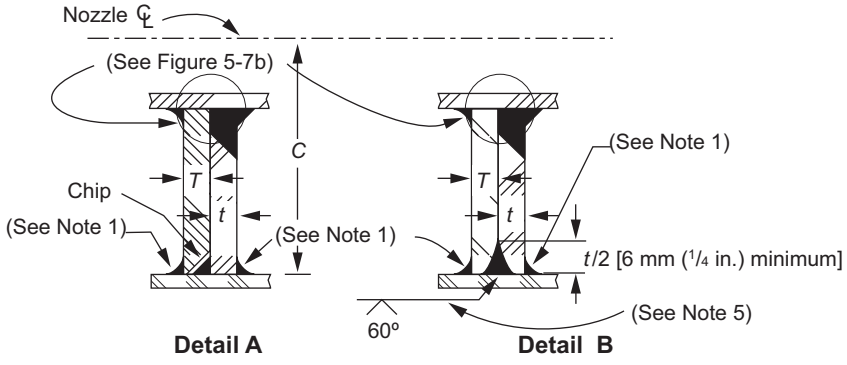

Low-type Flanged Nozzles, NPS 3 or Larger
(Bolt holes shall straddle flange centerlines)

NOTES
1. See 5.1.5.7 for information on the size of welds.
2. See 5.8.9 for information on the couplings used in shell nozzles.
3. Nozzles NPS 3 or larger require reinforcement.
4. Details of welding bevels may vary from those shown if agreed to by the Purchaser.
5. Shop weld not attached to bottom plate.
6. See 5.7.6.2 for information on supplying nozzles flush or with an internal projection.

Figure 5.8—Shell Nozzles (see Tables 5.6a, 5.6b, 5.7a, 5.7b, 5.8a, and 5.8b)

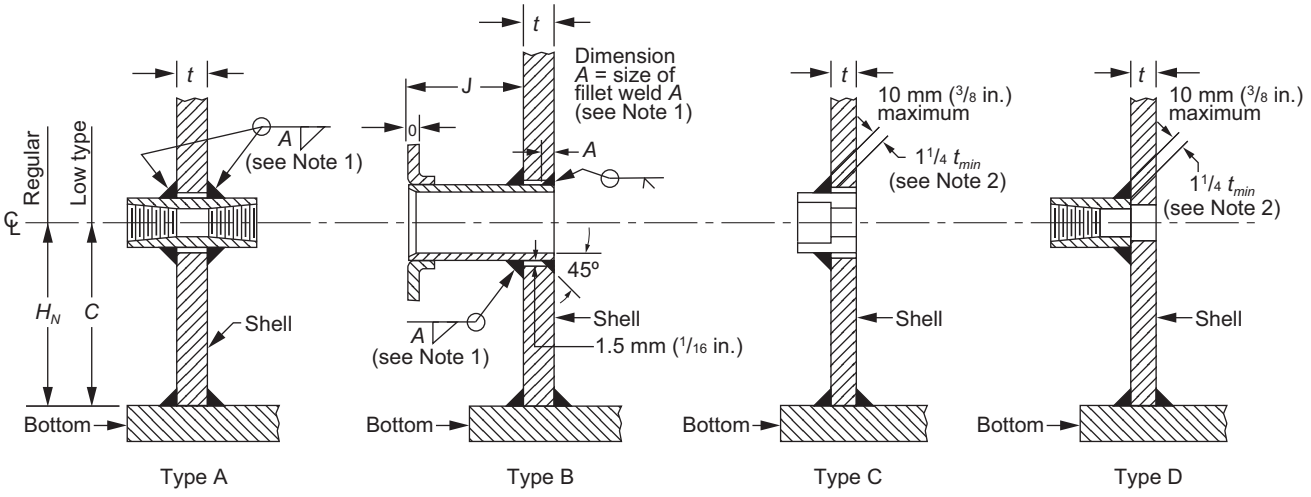

Couplings and Flanged Fittings, NPS 3/4 Through NPS 2 (see Note 3)

NOTES (continued)

7. See Table 5.7a and Table 5. 7b, Column 6.
8. t_{min} shall be 19 mm (3/4 in.) or the thickness of either part joined by the fillet weld, whichever is less.
9. The construction details apply to unreinforced threaded, non-threaded, and flanged nozzles.

Figure 5.8—Shell Nozzles (continued)

Table 5.6a—Dimensions for Shell Nozzles (SI)

Dimensions in millimeters

Column 1	Column 2	Column 3	Column 4	Column 5	Column 6	Column 7	Column 8	Column 9[c]
NPS (Size of Nozzle)	Outside Diameter of Pipe *OD*	Nominal Thickness of Flanged Nozzle Pipe Wall[a] t_n	Diameter of Hole in Reinforcing Plate D_R	Length of Side of Reinforcing Plate[b] or Diameter $L = D_o$	Width of Reinforcing Plate *W*	Minimum Distance from Shell-to-Flange Face *J*	Minimum Distance from Bottom of Tank to Center of Nozzle	
							Regular Type[d] H_N	Low Type *C*
Flanged Fittings								
60	1524.0	[e]	1528	3068	3703	400	1641	1534
54	1371.6	[e]	1375	2763	3341	400	1488	1382
52	1320.8	[e]	1324	2661	3214	400	1437	1331
50	1270.0	[e]	1274	2560	3093	400	1387	1280
48	1219.2	[e]	1222	2455	2970	400	1334	1230
46	1168.4	[e]	1172	2355	2845	400	1284	1180
44	1117.6	[e]	1121	2255	2725	375	1234	1125
42	1066.8	[e]	1070	2155	2605	375	1184	1075
40	1016.0	[e]	1019	2050	2485	375	1131	1025
38	965.2	[e]	968	1950	2355	350	1081	975
36	914.4	[e]	918	1850	2235	350	1031	925
34	863.6	[e]	867	1745	2115	325	979	875
32	812.8	[e]	816	1645	1995	325	929	820
30	762.0	[e]	765	1545	1865	300	879	770

Table 5.6a—Dimensions for Shell Nozzles (SI) (Continued)

Dimensions in millimeters

Column 1	Column 2	Column 3	Column 4	Column 5	Column 6	Column 7	Column 8	Column 9[c]
NPS (Size of Nozzle)	Outside Diameter of Pipe OD	Nominal Thickness of Flanged Nozzle Pipe Wall[a] t_n	Diameter of Hole in Reinforcing Plate D_R	Length of Side of Reinforcing Plate[b] or Diameter $L = D_o$	Width of Reinforcing Plate W	Minimum Distance from Shell-to-Flange Face J	Minimum Distance from Bottom of Tank to Center of Nozzle	
							Regular Type[d] H_N	Low Type C
28	711.2	[e]	714	1440	1745	300	826	720
26	660.4	[e]	664	1340	1625	300	776	670
24	609.6	12.7	613	1255	1525	300	734	630
22	558.8	12.7	562	1155	1405	275	684	580
20	508.0	12.7	511	1055	1285	275	634	525
18	457.2	12.7	460	950	1160	250	581	475
16	406.4	12.7	410	850	1035	250	531	425
14	355.6	12.7	359	750	915	250	481	375
12	323.8	12.7	327	685	840	225	449	345
10	273.0	12.7	276	585	720	225	399	290
8	219.1	12.7	222	485	590	200	349	240
6	168.3	10.97	171	400	495	200	306	200
4	114.3	8.56	117	305	385	175	259	150
3	88.9	7.62	92	265	345	175	239	135
2[f]	60.3	5.54	63	—	—	150	175	[h]
1 1/2[f]	48.3	5.08	51	—	—	150	150	[h]
1[f]	33.4	6.35	—	—	—	150	150	[h]
3/4[f]	26.7	5.54	—	—	—	150	150	[h]
Threaded and Socket-Welded Couplings								
3[g]	108.0	Coupling	111.1	285	360	—	245	145
2[f]	76.2	Coupling	79.4	—	—	—	175	[h]
1 1/2[f]	63.5	Coupling	66.7	—	—	—	150	[h]
1[f]	44.5	Coupling	47.6	—	—	—	150	[h]
3/4[f]	35.0	Coupling	38.1	—	—	—	150	[h]

[a] For extra-strong pipe, see ASTM A53M or A106M for other wall thicknesses; however, piping material must conform to 4.5.

[b] The width of the shell plate shall be sufficient to contain the reinforcing plate and to provide clearance from the girth joint of the shell course.

[c] Low type reinforced nozzles shall not be located lower than the minimum distance shown in Column 9. The minimum distance from the bottom shown in Column 9 complies with spacing rules of 5.7.3 and Figure 5.6.

[d] Regular type reinforced nozzles shall not be located lower than the minimum distance H_N shown in Column 8 when shell thickness is equal to or less than 12.5 mm. Greater distances may be required for shells thicker than 12.5 mm to meet the minimum weld spacing of 5.7.3 and Figure 5.6.

[e] See Table 5.7a, Column 2.

[f] Flanged nozzles and couplings in pipe sizes NPS 2 or smaller do not require reinforcing plates. D_R will be the diameter of the hole in the shell plate, and Weld A will be as specified in Table 5.7a, Column 6. Reinforcing plates may be used if the construction details comply with reinforced nozzle details.

[g] A coupling in an NPS 3 requires reinforcement.

[h] See 5.7.3 and Figure 5.6.

NOTE See Figure 5.8.

Table 5.6b—Dimensions for Shell Nozzles (USC)

Dimensions in inches

Column 1	Column 2	Column 3	Column 4	Column 5	Column 6	Column 7	Column 8	Column 9[c]
NPS (Size of Nozzle)	Outside Diameter of Pipe *OD*	Nominal Thickness of Flanged Nozzle Pipe Wall[a] t_n	Diameter of Hole in Reinforcing Plate D_R	Length of Side of Reinforcing Plate[b] or Diameter $L = D_o$	Width of Reinforcing Plate W	Minimum Distance from Shell-to-Flange Face J	Minimum Distance from Bottom of Tank to Center of Nozzle	
							Regular Type[d] H_N	Low Type C
Flanged Fittings								
60	60	[e]	60 1/8	120 3/4	145 3/4	16	64 5/8	60 3/8
54	54	[e]	54 1/8	108 3/4	131 1/2	16	58 5/8	54 3/8
52	52	[e]	52 1/8	104 3/4	126 1/2	16	56 5/8	52 3/8
50	50	[e]	50 1/8	100 3/4	121 3/4	16	54 5/8	50 3/8
48	48	[e]	48 1/8	96 3/4	117	16	52 5/8	48 3/8
46	46	[e]	46 1/8	92 3/4	112	16	50 5/8	46 3/8
44	44	[e]	44 1/8	88 3/4	107 1/4	15	48 5/8	44 3/8
42	42	[e]	42 1/8	84 3/4	102 1/2	15	46 5/8	42 3/8
40	40	[e]	40 1/8	80 3/4	97 3/4	15	44 5/8	40 3/8
38	38	[e]	38 1/8	76 3/4	92 3/4	14	42 5/8	38 3/8
36	36	[e]	36 1/8	72 3/4	88	14	40 5/8	36 3/8
34	34	[e]	34 1/8	68 3/4	83 1/4	13	38 5/8	34 3/8
32	32	[e]	32 1/8	64 3/4	78 1/2	13	36 5/8	32 3/8
30	30	[e]	30 1/8	60 3/4	73 1/2	12	34 5/8	30 3/8
28	28	[e]	28 1/8	56 3/4	68 3/4	12	32 5/8	28 3/8
26	26	[e]	26 1/8	52 3/4	64	12	30 5/8	26 3/8
24	24	0.50	24 1/8	49 1/2	60	12	29	24 3/4
22	22	0.50	22 1/8	45 1/2	55 1/4	11	27	22 3/4
20	20	0.50	20 1/8	41 1/2	50 1/2	11	25	20 3/4
18	18	0.50	18 1/8	37 1/2	45 3/4	10	23	18 3/4
16	16	0.50	16 1/8	33 1/2	40 3/4	10	21	16 3/4
14	14	0.50	14 1/8	29 1/2	36	10	19	14 3/4
12	12 3/4	0.50	12 7/8	27	33	9	17 3/4	13 1/2
10	10 3/4	0.50	10 7/8	23	28 1/4	9	15 3/4	11 1/2
8	8 5/8	0.50	8 3/4	19	23 1/4	8	13 3/4	9 1/2
6	6 5/8	0.432	6 3/4	15 3/4	19 1/2	8	12 1/8	7 7/8
4	4 1/2	0.337	4 5/8	12	15 1/4	7	10 1/4	6
3	3 1/2	0.300	3 5/8	10 1/2	13 1/2	7	9 1/2	5 1/4
2[f]	2 3/8	0.218	2 1/2	—	—	6	7	[h]

Table 5.6b—Dimensions for Shell Nozzles (USC) (Continued)

Dimensions in inches

Column 1	Column 2	Column 3	Column 4	Column 5	Column 6	Column 7	Column 8	Column 9[c]
NPS (Size of Nozzle)	Outside Diameter of Pipe *OD*	Nominal Thickness of Flanged Nozzle Pipe Wall[a] t_n	Diameter of Hole in Reinforcing Plate D_R	Length of Side of Reinforcing Plate[b] or Diameter $L = D_o$	Width of Reinforcing Plate *W*	Minimum Distance from Shell-to-Flange Face *J*	Minimum Distance from Bottom of Tank to Center of Nozzle	
							Regular Type[d] H_N	Low Type *C*
1 1/2[f]	1.90	0.200	2	—	—	6	6	[h]
1[f]	1.315	0.250	—	—	—	6	6	[h]
3/4[f]	1.05	0.218	—	—	—	6	6	[h]
Threaded and Socket-Welded Couplings								
3[g]	4.250	Coupling	4 3/8	11 1/4	14 1/4	—	9 5/8	5 5/8
2[f]	3.000	Coupling	3 1/8	—	—	—	7	[h]
1 1/2[f]	2.500	Coupling	2 5/8	—	—	—	6	[h]
1[f]	1.750	Coupling	1 7/8	—	—	—	6	[h]
3/4[f]	1.375	Coupling	1 1/2	—	—	—	5	[h]

[a] For extra-strong pipe, see ASTM A53 or A106 for other wall thicknesses; however, piping material must conform to 4.5.

[b] The width of the shell plate shall be sufficient to contain the reinforcing plate and to provide clearance from the girth joint of the shell course.

[c] Low type reinforced nozzles shall not be located lower than the minimum distance shown in Column 9. The minimum distance from the bottom shown in Column 9 complies with spacing rules of 5.7.3 and Figure 5.6.

[d] Regular type reinforced nozzles shall not be located lower than the minimum distance H_N shown in Column 8 when shell thickness is equal to or less than 1/2 in. Greater distances may be required for shells thicker than 1/2 in. to meet the minimum weld spacing of 5.7.3 and Figure 5.6.

[e] See Table 5.7b, Column 2.

[f] Flanged nozzles and couplings in pipe sizes NPS 2 or smaller do not require reinforcing plates. D_R will be the diameter of the hole in the shell plate, and Weld *A* will be as specified in Table 5.7b, Column 6. Reinforcing plates may be used if the construction details comply with reinforced nozzle details.

[g] A coupling in an NPS 3 requires reinforcement.

[h] See 5.7.3 and Figure 5.6.

NOTE See Figure 5.8.

Table 5.7a—Dimensions for Shell Nozzles: Pipe, Plate, and Welding Schedules (SI)

Dimensions in millimeters

Column 1	Column 2	Column 3	Column 4	Column 5	Column 6
Thickness of Shell and Reinforcing Plate[a] *t* and *T*	Minimum Pipe Wall Thickness of Flanged Nozzles[b] t_n	Maximum Diameter of Hole in Shell Plate (D_p) Equals Outside Diameter of Pipe Plus	Size of Fillet Weld *B*	Size of Fillet Weld *A*	
				Nozzles Larger Than NPS 2	NPS 3/4 to 2 Nozzles
5	12.7	16	5	6	6
6	12.7	16	6	6	6
8	12.7	16	8	6	6
10	12.7	16	10	6	6
11	12.7	16	11	6	6
13	12.7	16	13	6	8
14	12.7	20	14	6	8

Table 5.7a—Dimensions for Shell Nozzles: Pipe, Plate, and Welding Schedules (SI) (Continued)

Dimensions in millimeters

Column 1	Column 2	Column 3	Column 4	Column 5	Column 6
Thickness of Shell and Reinforcing Plate[a] t and T	Minimum Pipe Wall Thickness of Flanged Nozzles[b] t_n	Maximum Diameter of Hole in Shell Plate (D_p) Equals Outside Diameter of Pipe Plus	Size of Fillet Weld B	Size of Fillet Weld A	
				Nozzles Larger Than NPS 2	NPS $^3/_4$ to 2 Nozzles
16	12.7	20	16	8	8
17	12.7	20	18	8	8
20	12.7	20	20	8	8
21	12.7	20	21	10	8
22	12.7	20	22	10	8
24	12.7	20	24	10	8
25	12.7	20	25	11	8
27	14	20	27	11	8
28	14	20	28	11	8
30	16	20	30	13	8
32	16	20	32	13	8
33	18	20	33	13	8
35	18	20	35	14	8
36	20	20	36	14	8
38	20	20	38	14	8
40	21	20	40	14	8
41	21	20	40	16	8
43	22	20	40	16	8
45	22	20	40	16	8

[a] If a shell plate thicker than required is used for the product and hydrostatic loading (see 5.6), the excess shell-plate thickness, within a vertical distance both above and below the centerline of the hole in the tank shell plate equal to the vertical dimension of the hole in the tank shell plate, may be considered as reinforcement, and the thickness T of the nozzle reinforcing plate may be decreased accordingly. In such cases, the reinforcement and the attachment welding shall conform to the design limits for reinforcement of shell openings specified in 5.7.2.

[b] This column applies to flanged nozzles NPS 26 and larger. See 4.5 for piping materials.

NOTE See Figure 5.8.

b) The portion lying within the shell-plate thickness.

c) The portion extending inward from the inside surface of the tank shell plate to the distance specified in Item a.

5.7.2.5 The aggregate strength of the weld attaching a fitting to the shell plate, an intervening reinforcing plate, or both shall at least equal the proportion of the forces passing through the entire reinforcement that is calculated to pass through the fitting.

Table 5.7b—Dimensions for Shell Nozzles: Pipe, Plate, and Welding Schedules (USC)

Dimensions in inches

Column 1	Column 2	Column 3	Column 4	Column 5	Column 6
Thickness of Shell and Reinforcing Plate[a] t and T	Minimum Pipe Wall Thickness of Flanged Nozzles[b] t_n	Maximum Diameter of Hole in Shell Plate (D_p) Equals Outside Diameter of Pipe Plus	Size of Fillet Weld B	Size of Fillet Weld A	
				Nozzles Larger Than NPS 2	NPS 3/4 to 2 Nozzles
3/16	1/2	5/8	3/16	1/4	1/4
1/4	1/2	5/8	1/4	1/4	1/4
5/16	1/2	5/8	5/16	1/4	1/4
3/8	1/2	5/8	3/8	1/4	1/4
7/16	1/2	5/8	7/16	1/4	1/4
1/2	1/2	5/8	1/2	1/4	5/16
9/16	1/2	3/4	9/16	1/4	5/16
5/8	1/2	3/4	5/8	5/16	5/16
11/16	1/2	3/4	11/16	5/16	5/16
3/4	1/2	3/4	3/4	5/16	5/16
13/16	1/2	3/4	13/16	3/8	5/16
7/8	1/2	3/4	7/8	3/8	5/16
15/16	1/2	3/4	15/16	3/8	5/16
1	1/2	3/4	1	7/16	5/16
1 1/16	9/16	3/4	1 1/16	7/16	5/16
1 1/8	9/16	3/4	1 1/8	7/16	5/16
1 3/16	5/8	3/4	1 3/16	1/2	5/16
1 1/4	5/8	3/4	1 1/4	1/2	5/16
1 5/16	11/16	3/4	1 5/16	1/2	5/16
1 3/8	11/16	3/4	1 3/8	9/16	5/16
1 7/16	3/4	3/4	1 7/16	9/16	5/16
1 1/2	3/4	3/4	1 1/2	9/16	5/16
1 9/16	13/16	3/4	1 1/2	9/16	5/16
1 5/8	13/16	3/4	1 1/2	5/8	5/16
1 11/16	7/8	3/4	1 1/2	5/8	5/16
1 3/4	7/8	3/4	1 1/2	5/8	5/16

[a] If a shell plate thicker than required is used for the product and hydrostatic loading (see 5.6), the excess shell-plate thickness, within a vertical distance both above and below the centerline of the hole in the tank shell plate equal to the vertical dimension of the hole in the tank shell plate, may be considered as reinforcement, and the thickness T of the nozzle reinforcing plate may be decreased accordingly. In such cases, the reinforcement and the attachment welding shall conform to the design limits for reinforcement of shell openings specified in 5.7.2.

[b] This column applies to flanged nozzles NPS 26 and larger. See 4.5 for piping materials.

NOTE See Figure 5.8.

Table 5.8a—Dimensions for Shell Nozzle Flanges (SI)

Dimensions in millimeters

Column 1	Column 2	Column 3	Column 4	Column 5	Column 6	Column 7	Column 8	Column 9	Column 10	Column 11	Column 12
NPS (Size of Nozzle)	Minimum Thickness of Flange[d] *Q*	Outside Diameter of Flange *A*	Diameter of Raised Face *D*	Diameter of Bolt Circle *C*	Number of Holes	Diameter of Holes	Diameter of Bolts	Diameter of Bore		Minimum Diameter of Hub at Point of Weld	
								Slip-On Type: Outside Diameter of Pipe Plus *B*	Welding Neck Type[a] B_1	Slip-On Type[b] *E*	Welding Neck Type[c] E_1
60	79.4	1854	1676	1759	52	48	45	6.4	a	b	c
54	76.2	1683	1511	1594	44	48	45	6.4	a	b	c
52	73	1626	1461	1537	44	48	45	6.4	a	b	c
50	70	1569	1410	1480	44	48	45	6.4	a	b	c
48	70	1510	1360	1426	44	42	40	6.4	a	b	c
46	68	1460	1295	1365	40	42	40	6.4	a	b	c
44	67	1405	1245	1315	40	42	40	6.4	a	b	c
42	67	1345	1195	1257	36	42	40	6.4	a	b	c
40	65	1290	1125	1200	36	42	40	6.4	a	b	c
38	60	1240	1075	1150	32	42	40	6.4	a	b	c
36	60	1170	1020	1036	32	42	40	6.4	a	b	c
34	59	1110	960	1029	32	42	40	6.4	a	b	c
32	57	1060	910	978	28	42	40	6.4	a	b	c
30	54	985	855	914	28	33	30	6.4	a	b	c
28	52	925	795	864	28	33	30	6.4	a	b	c
26	50	870	745	806	24	33	30	6.4	a	b	c
24	48	815	690	750	20	33	30	4.8	a	b	c
22	46	750	640	692	20	33	30	4.8	a	b	c
20	43	700	585	635	20	30	27	4.8	a	b	c
18	40	635	535	577	16	30	27	4.8	a	b	c
16	36	595	470	540	16	27	24	4.8	a	b	c
14	35	535	415	476	12	27	24	4.8	a	b	c
12	32	485	380	432	12	25	22	3.2	a	b	c
10	30	405	325	362	12	25	22	3.2	a	b	c
8	28	345	270	298	8	23	20	3.2	a	b	c
6	25	280	216	241	8	23	20	2.4	a	b	c
4	24	230	157	190	8	19	16	1.6	a	b	c
3	24	190	127	152	4	19	16	1.6	a	b	c
2	20	150	92	121	4	19	16	1.6	a	b	c
$1^1/_2$	17	125	73	98	4	16	12	1.6	a	b	c

[a] B_1 = inside diameter of pipe.

[b] E = outside diameter of pipe + $2t_n$.

[c] E_1 = outside diameter of pipe.

[d] Corrosion allowance, if specified, need not be added to flange and cover thicknesses complying with ASME B16.5 Class 150, ASME B16.1 Class 125, and ASME B16.47 flanges.

NOTE See Figure 5.8. The facing dimensions for slip-on and welding-neck flanges in NPS $1^1/_2$ through 20 and NPS 24 are identical to those specified in ASME B16.5 for Class 150 steel flanges. The facing dimensions for flanges in NPS 30, 36, 42, 48, 50, 52, 54, and 60 are in agreement with ASME B16.1 for Class 125 cast iron flanges. The dimensions for large flanges may conform to Series B of ASME B16.47.

Table 5.8b—Dimensions for Shell Nozzle Flanges (USC)

Dimensions in inches

Column 1	Column 2	Column 3	Column 4	Column 5	Column 6	Column 7	Column 8	Column 9	Column 10	Column 11	Column 12
								Diameter of Bore		Minimum Diameter of Hub at Point of Weld	
NPS (Size of Nozzle)	Minimum Thickness of Flange[d] *Q*	Outside Diameter of Flange *A*	Diameter of Raised Face *D*	Diameter of Bolt Circle *C*	Number of Holes	Diameter of Holes	Diameter of Bolts	Slip-On Type: Outside Diameter of Pipe Plus *B*	Welding Neck Type[a] B_1	Slip-On Type[b] *E*	Welding Neck Type[c] E_1
60	3 1/8	73	66	69 1/4	52	17/8	1 3/4	0.25	a	b	c
54	3	66 1/4	59 1/2	62 3/4	44	17/8	1 3/4	0.25	a	b	c
52	2 7/8	64	57 1/2	60 1/2	44	17/8	1 3/4	0.25	a	b	c
50	2 3/4	61 3/4	55 1/2	58 1/4	44	17/8	1 3/4	0.25	a	b	c
48	2 3/4	59 1/2	53 1/2	56	44	1 5/8	1 1/2	0.25	a	b	c
46	2 11/16	57 1/2	51	53 3/4	40	1 5/8	1 1/2	0.25	a	b	c
44	2 5/8	55 1/4	49	51 3/4	40	1 5/8	1 1/2	0.25	a	b	c
42	2 5/8	53	47	49 1/2	36	1 5/8	1 1/2	0.25	a	b	c
40	2 1/2	50 3/4	44 1/4	47 1/4	36	1 5/8	1 1/2	0.25	a	b	c
38	2 3/8	48 3/4	42 1/4	45 1/4	32	1 5/8	1 1/2	0.25	a	b	c
36	2 3/8	46	40 1/4	42 3/4	32	1 5/8	1 1/2	0.25	a	b	c
34	2 5/16	43 3/4	37 3/4	40 1/2	32	1 5/8	1 1/2	0.25	a	b	c
32	2 1/4	41 3/4	35 3/4	38 1/2	28	1 5/8	1 1/2	0.25	a	b	c
30	2 1/8	38 3/4	33 3/4	36	28	1 3/8	1 1/4	0.25	a	b	c
28	2 1/16	36 1/2	31 1/4	34	28	1 3/8	1 1/4	0.25	a	b	c
26	2	34 1/4	29 1/4	31 3/4	24	1 3/8	1 1/4	0.25	a	b	c
24	1 7/8	32	27 1/4	29 1/2	20	1 3/8	1 1/4	0.19	a	b	c
22	1 13/16	29 1/2	25 1/4	27 1/4	20	1 3/8	1 1/4	0.19	a	b	c
20	1 11/16	27 1/2	23	25	20	1 1/4	1 1/8	0.19	a	b	c
18	1 9/16	25	21	22 3/4	16	1 1/4	1 1/8	0.19	a	b	c
16	1 7/16	23 1/2	18 1/2	21 1/4	16	1 1/8	1	0.19	a	b	c
14	1 3/8	21	16 1/4	18 3/4	12	1 1/8	1	0.19	a	b	c
12	1 1/4	19	15	17	12	1	7/8	0.13	a	b	c
10	1 3/16	16	12 3/4	14 1/4	12	1	7/8	0.13	a	b	c
8	1 1/8	13 1/2	10 5/8	11 3/4	8	7/8	3/4	0.10	a	b	c
6	1	11	8 1/2	9 1/2	8	7/8	3/4	0.10	a	b	c
4	15/16	9	6 3/16	7 1/2	8	3/4	5/8	0.06	a	b	c
3	15/16	7 1/2	5	6	4	3/4	5/8	0.06	a	b	c
2	3/4	6	3 5/8	4 3/4	4	3/4	5/8	0.07	a	b	c
1 1/2	11/16	5	2 7/8	3 7/8	4	5/8	1/2	0.07	a	b	c

[a] B_1 = inside diameter of pipe.

[b] E = outside diameter of pipe + $2t_n$.

[c] E_1 = outside diameter of pipe.

[d] Corrosion allowance, if specified, need not be added to flange and cover thicknesses complying with ASME B16.5 Class 150, ASME B16.1 Class 125, and ASME B16.47 flanges.

NOTE See Figure 5.8. The facing dimensions for slip-on and welding-neck flanges in NPS 1 1/2 through 20 and NPS 24 are identical to those specified in ASME B16.5 for Class 150 steel flanges. The facing dimensions for flanges in NPS 30, 36, 42, 48, 50, 52, 54, and 60 are in agreement with ASME B16.1 for Class 125 cast iron flanges. The dimensions for large flanges may conform to Series B of ASME B16.47.

Table 5.9a—Dimensions for Flush-Type Cleanout Fittings (SI)

Dimensions in millimeters

Column 1	Column 2	Column 3	Column 4	Column 5	Column 6	Column 7	Column 8	Column 9	Column 10	Column 11
Height of Opening h	Width of Opening b	Arc Width of Shell Reinforcing Plate W	Upper Corner Radius of Opening r_1	Upper Corner Radius of Shell Reinforcing Plate r_2	Edge Distance of Bolts e	Flange Width[a] (Except at Bottom) f_3	Bottom Flange Width f_2	Special Bolt Spacing[b] g	Number of Bolts	Diameter of Bolts
203	406	1170	100	360	32	102	89	83	22	20
610	610	1830	300	740	38	102	95	89	36	20
914	1219	2700	610	1040	38	114	121	108	46	24
1219[c]	1219	3200	610	1310	38	114	127	114	52	24

[a] For neck thicknesses greater than 40 mm, increase f_3 as necessary to provide a 1.5 mm clearance between the required neck-to-flange weld and the head of the bolt.

[b] Refers to spacing at the lower corners of the cleanout-fitting flange.

[c] Only for Group I, II, III, or IIIA shell materials (see 5.7.7.2).

NOTE See Figure 5.12.

Table 5.9b—Dimensions for Flush-Type Cleanout Fittings (USC)

Dimensions in inches

Column 1	Column 2	Column 3	Column 4	Column 5	Column 6	Column 7	Column 8	Column 9	Column 10	Column 11
Height of Opening h	Width of Opening b	Arc Width of Shell Reinforcing Plate W	Upper Corner Radius of Opening r_1	Upper Corner Radius of Shell Reinforcing Plate r_2	Edge Distance of Bolts e	Flange Width[a] (Except at Bottom) f_3	Bottom Flange Width f_2	Special Bolt Spacing[b] g	Number of Bolts	Diameter of Bolts
8	16	46	4	14	$1\frac{1}{4}$	4	$3\frac{1}{2}$	$3\frac{1}{4}$	22	$\frac{3}{4}$
24	24	72	12	29	$1\frac{1}{2}$	4	$3\frac{3}{4}$	$3\frac{1}{2}$	36	$\frac{3}{4}$
36	48	106	24	41	$1\frac{1}{2}$	$4\frac{1}{2}$	$4\frac{3}{4}$	$4\frac{1}{4}$	46	1
48[c]	48	125	24	$51\frac{1}{2}$	$1\frac{1}{2}$	$4\frac{1}{2}$	5	$4\frac{1}{2}$	52	1

[a] For neck thicknesses greater than $1\frac{9}{16}$ in., increase f_3 as necessary to provide a $\frac{1}{16}$ in. clearance between the required neck-to-flange weld and the head of the bolt.

[b] Refers to spacing at the lower corners of the cleanout-fitting flange.

[c] Only for Group I, II, III, or IIIA shell materials (see 5.7.7.2).

NOTE See Figure 5.12.

Table 5.10a—Minimum Thickness of Cover Plate, Bolting Flange, and Bottom Reinforcing Plate for Flush-Type Cleanout Fittings[f] (SI)

Dimensions in millimeters

Column 1	Column 2	Column 3	Column 4	Column 5	Column 6	Column 7	Column 8	Column 9	Column 10
		Size of Opening $h \times b$ (Height × Width)							
		200 × 400		600 × 600		900 × 1200		1200 × 1200	
Maximum Design Liquid Level, m H	Equivalent Pressure[a] kPa	Thickness of Bolting Flange and Cover Plate t_c	Thickness of Bottom Reinforcing Plate[b] t_b	Thickness of Bolting Flange and Cover Plate t_c	Thickness of Bottom Reinforcing Plate[c] t_b	Thickness of Bolting Flange and Cover Plate t_c	Thickness of Bottom Reinforcing Plate[d] t_b	Thickness of Bolting Flange and CoverPlate t_c	Thickness of Bottom Reinforcing Plate[e] t_b
6.1	60	10	13	10	13	16	21	16	22
10.4	101	10	13	13	13	19	25	21	28
12.5	123	10	13	13	14	22	28	22	30
16.1	159	10	13	14	16	24	32	25	33
18.3	179	11	13	16	18	25	33	28	35
19.5	191	11	13	16	18	27	35	28	36
21.9	215	11	13	18	19	28	36	30	40

[a] Equivalent pressure is based on water loading.

[b] Maximum of 25 mm.

[c] Maximum of 28 mm.

[d] Maximum of 40mm.

[e] Maximum of 45 mm.

[f] See 5.7.7.7 when corrosion allowance is specified.

NOTE See Figure 5.12.

Table 5.10b—Minimum Thickness of Cover Plate, Bolting Flange, and Bottom Reinforcing Plate for Flush-Type Cleanout Fittings[f] (USC)

Dimensions in inches

Column 1	Column 2	Column 3	Column 4	Column 5	Column 6	Column 7	Column 8	Column 9	Column 10
		Size of Opening $h \times b$ (Height × Width)							
		8 × 16		24 × 24		36 × 48		48 × 48	
Maximum Design Liquid Level, m H	Equivalent Pressure[a] kPa	Thickness of Bolting Flange and Cover Plate t_c	Thickness of Bottom Reinforcing Plate[b] t_b	Thickness of Bolting Flange and Cover Plate t_c	Thickness of Bottom Reinforcing Plate[c] t_b	Thickness of Bolting Flange and Cover Plate t_c	Thickness of Bottom Reinforcing Plate[d] t_b	Thickness of Bolting Flange and CoverPlate t_c	Thickness of Bottom Reinforcing Plate[e] t_b
20	8.7	3/8	1/2	3/8	1/2	5/8	13/16	5/8	7/8
34	14.7	3/8	1/2	1/2	1/2	3/4	1	13/16	1 1/8
41	17.8	3/8	1/2	1/2	9/16	7/8	1 1/8	7/8	1 3/16
53	23	3/8	1/2	9/16	5/8	15/16	1 1/4	1	1 5/16
60	26	7/16	1/2	5/8	11/16	1	1 5/16	1 1/8	1 3/8
64	27.8	7/16	1/2	5/8	11/16	1 1/16	1 3/8	1 1/8	1 7/16
72	31.2	7/16	1/2	11/16	3/4	1 1/8	1 7/16	1 3/16	1 1/2

[a] Equivalent pressure is based on water loading.

[b] Maximum of 1 in.

[c] Maximum of 1 1/8 in.

[d] Maximum of 1 1/2 in.

[e] Maximum of 1 3/4 in.

[f] See 5.7.7.7 when corrosion allowance is specified.

NOTE See Figure 5.12.

Table 5.11a—Thicknesses and Heights of Shell Reinforcing Plates for Flush-Type Cleanout Fittings (SI)

Dimensions in millimeters

Thickness of Lowest Shell Course t, t_d[a] mm	Maximum Design Liquid Level[c] H m	Height of Shell Reinforcing Plate for Size of Opening $h \times b$ (Height × Width) mm			
		200 × 400	600 × 600	900 × 1200	1200 × 1200[b]
All	< 22	350	915	1372	1830

[a] Dimensions t_d and L may be varied within the limits defined in 5.7.7.

[b] 1200 × 1200 flush-type cleanout fittings are not permitted for tanks with greater than 38 mm lowest shell course thickness.

[c] See 5.6.3.2.

Table 5.11b—Thicknesses and Heights of Shell Reinforcing Plates for Flush-Type Cleanout Fittings (USC)

Dimensions in inches

Thickness of Lowest Shell Course t, t_d[a] in.	Maximum Design Liquid Level[c] H ft	Height of Shell Reinforcing Plate for Size of Opening $h \times b$ (Height × Width) mm			
		8 × 16	24 × 24	36 × 48	48 × 48[b]
All	< 72	14	36	54	72

[a] Dimensions t_d and L may be varied within the limits defined in 5.7.7.

[b] 48 × 48 flush-type cleanout fittings are not permitted for tanks with greater than $1^1/_2$ in. lowest shell course thickness.

[c] See 5.6.3.2.

5.7.2.6 The aggregate strength of the welds attaching any intervening reinforcing plate to the shell plate shall at least equal the proportion of the forces passing through the entire reinforcement that is calculated to pass through the reinforcing plate.

5.7.2.7 The attachment weld to the shell along the outer periphery of a reinforcing plate or proprietary connection that lap welds to the shell shall be considered effective only for the parts lying outside the area bounded by vertical lines drawn tangent to the shell opening; however, the outer peripheral weld shall be applied completely around the reinforcement. See 5.7.2.8 for allowable stresses. All of the inner peripheral weld shall be considered effective. The strength of the effective attachment weld shall be considered as the weld's shear resistance at the stress value given for fillet welds in 5.7.2.8. The size of the outer peripheral weld shall be equal to the thickness of the shell plate or reinforcing plate, whichever is thinner, but shall not be greater than 40 mm ($1^1/_2$ in.). When low-type nozzles are used with a reinforcing plate that extends to the tank bottom (see Figure 5.8), the size of the portion of the peripheral weld that attaches the reinforcing plate to the bottom plate shall conform to 5.1.5.7. The inner peripheral weld shall be large enough to sustain the remainder of the loading.

5.7.2.8 The reinforcement and welding shall be configured to provide the required strength for the forces covered in 5.7.2.5 and 5.7.2.6.

The allowable stresses for the attachment elements are:

a) For outer reinforcing plate-to-shell and inner reinforcing plate-to-nozzle neck fillet welds: $S_d \times 0.60$.

b) For tension across groove welds: $S_d \times 0.875 \times 0.70$

c) For shear in the nozzle neck: $S_d \times 0.80 \times 0.875$

where

S_d is the maximum allowable design stress (the lesser value of the base materials joined) permitted by 5.6.2.1 for carbon steel, or by Tables S.2a and S.2b for stainless steel.

Stress in fillet welds shall be considered as shear on the throat of the weld. The throat of the fillet shall be assumed to be 0.707 times the length of the shorter leg. Tension stress in the groove weld shall be considered to act over the effective weld depth.

5.7.2.9 When two or more openings are located so that the outer edges (toes) of their normal reinforcing-plate fillet welds are closer than eight times the size of the larger of the fillet welds, with a minimum of 150 mm (6 in.), they shall be treated and reinforced as follows:

a) All such openings shall be included in a single reinforcing plate that shall be proportioned for the largest opening in the group.

b) If the normal reinforcing plates for the smaller openings in the group, considered separately, fall within the area limits of the solid portion of the normal plate for the largest opening, the smaller openings may be included in the normal plate for the largest opening without an increase in the size of the plate, provided that if any opening intersects the vertical centerline of another opening, the total width of the final reinforcing plate along the vertical centerline of either opening is not less than the sum of the widths of the normal plates for the openings involved.

c) If the normal reinforcing plates for the smaller openings in the group, considered separately, do not fall within the area limits of the solid portion of the normal plate for the largest opening, the group reinforcing-plate size and shape shall include the outer limits of the normal reinforcing plates for all the openings in the group. A change in size from the outer limits of the normal plate for the largest opening to the outer limits of that for the smaller opening farthest from the largest opening shall be accomplished by uniform straight taper unless the normal plate for any intermediate opening would extend beyond these limits, in which case uniform straight tapers shall join the outer limits of the several normal plates. The provisions of Item b with respect to openings on the same or adjacent vertical centerlines also apply in this case.

5.7.2.10 Reinforcing plates for shell openings, or each segment of the plates if they are not made in one piece, shall be provided with a 6 mm ($^1/_4$ in.) diameter telltale hole. Such holes shall be located on the horizontal centerline and shall be open to the atmosphere.

5.7.3 Spacing of Welds around Connections

See Figure 5.6 for spacing requirements listed in 5.7.3.1, 5.7.3.2, 5.7.3.3, and 5.7.3.4.

NOTE 1 Additional weld spacing requirements exist in this standard. Other paragraphs and tables dealing with nozzles and manholes may increase the minimum spacing.

NOTE 2 Whenever stress relief or thermal stress relief is used in this standard, it shall mean post-weld heat treatment.

5.7.3.1 For non-stress-relieved welds on shell plates over 13 mm ($^1/_2$ in.) thick, the minimum spacing between penetration connections and adjacent shell-plate joints shall be governed by the following.

a) The outer edge or toe of fillet around a penetration, around the periphery of a thickened insert plate, or around the periphery of a reinforcing plate shall be spaced at least the greater of eight times the weld size or 250 mm (10 in.) (dimension A or B in Figure 5.6) from the centerline of any butt-welded shell joints.

b) The welds around the periphery of a thickened insert plate, around a reinforcing insert plate, or around a reinforcing plate shall be spaced at least the greater of eight times the larger weld size or 150 mm (6 in.) (dimension E in Figure 5.6) from each other.

5.7.3.2 Where stress-relieving of the periphery weld has been performed prior to welding of the adjacent shell joint or where a non-stress-relieved weld is on a shell plate less than or equal to 13 mm ($^1/_2$ in.) thick, the spacing may be reduced to 150 mm (6 in.) (dimension A in Figure 5.6) from vertical joints or to the greater of 75 mm (3 in.) or $2^1/_2$ times the shell thickness (dimension B in Figure 5.6) from horizontal joints. The spacing between the welds around the periphery of a thickened insert plate or around a reinforcing plate shall be the greater of 75 mm (3 in.) or $2^1/_2$ times the shell thickness (dimension E in Figure 5.6).

5.7.3.3 The rules in 5.7.3.1 and 5.7.3.2 shall also apply to the bottom-to-shell joint (dimension C in Figure 5.6) unless, as an alternative, the insert plate or reinforcing plate extends to the bottom-to-shell joint and intersects it at approximately 90 degrees (dimension D in Figure 5.6). A minimum distance of 75 mm (3 in.) shall be maintained between the toe of a weld around a nonreinforced penetration (see 5.7.2.1) and the toe of the shell-to-bottom weld.

• **5.7.3.4** Nozzles and manholes should not be placed in shell weld seams and reinforcing pads for nozzles and manholes should not overlap plate seams (i.e. Figure 5.9, Details a, c, and e should be avoided). If there is no other feasible option and the Purchaser accepts the design, circular shell openings and reinforcing plates (if used) may be located in a horizontal or vertical butt-welded shell joint provided that the minimum spacing dimensions are met and a radiographic examination of the welded shell joint is conducted. The welded shell joint shall be fully radiographed for a length equal to three times the diameter of the opening, but the weld seam being removed need not be radiographed. Radiographic examination shall be in accordance with 8.1.3 through 8.1.8.

5.7.4 Thermal Stress Relief

5.7.4.1 All flush-type cleanout fittings and flush-type shell connections shall be thermally stress-relieved as an assembly prior to installation in the tank shell or after installation into the tank shell if the entire tank is stress-relieved. The stress relief shall be carried out within a temperature range of 600 °C to 650 °C (1100 °F to 1200 °F) (see 5.7.4.3 for quenched and tempered materials) for 1 hour per 25 mm (1 in.) of shell thickness. The assembly shall include the bottom reinforcing plate (or annular plate) and the flange-to-neck weld.

5.7.4.2 When the shell material is Group I, II, III, or IIIA, all opening connections NPS 12 or larger in nominal diameter in a shell plate or thickened insert plate more than 25 mm (1 in.) thick shall be prefabricated into the shell plate or thickened insert plate, and the prefabricated assembly shall be thermally stress-relieved within a temperature range of 600 °C to 650 °C (1100 °F to 1200 °F) for 1 hour per 25 mm (1 in.) of thickness prior to installation. The stress-relieving requirements need not include the flange-to-neck welds or other nozzle-neck and manhole-neck attachments, provided the following conditions are fulfilled.

a) The welds are outside the reinforcement (see 5.7.2.4).

b) The throat dimension of a fillet weld in a slip-on flange does not exceed 16 mm ($^5/_8$ in.), or the butt joint of a welding-neck flange does not exceed 19 mm ($^3/_4$ in.). If the material is preheated to a minimum temperature of 90 °C (200 °F) during welding, the weld limits of 16 mm ($^5/_8$ in.) and 19 mm ($^3/_4$ in.) may be increased to 32 mm and 40 mm ($1^1/_4$ in. and $1^1/_2$ in.), respectively.

5.7.4.3 When the shell material is Group IV, IVA, V, or VI, all opening connections requiring reinforcement in a shell plate or thickened insert plate more than 13 mm ($^1/_2$ in.) thick shall be prefabricated into the shell plate or thickened insert plate, and the prefabricated assembly shall be thermally stress relieved within a temperature range of 600 °C to 650 °C (1100 °F to 1200 °F) for 1 hour per 25 mm (1 in.) of thickness prior to installation.

When connections are installed in quenched and tempered material, the maximum thermal stress-relieving temperature shall not exceed the tempering temperature for the materials in the prefabricated stress-relieving assembly. The stress-relieving requirements do not apply to the weld to the bottom annular plate, but they do apply to flush-type cleanout openings when the bottom reinforcing plate is an annular-plate section. The stress-relieving requirements need not include the flange-to-neck welds or other nozzle-neck and manhole-neck attachments, provided the conditions of 5.7.4.2 are fulfilled.

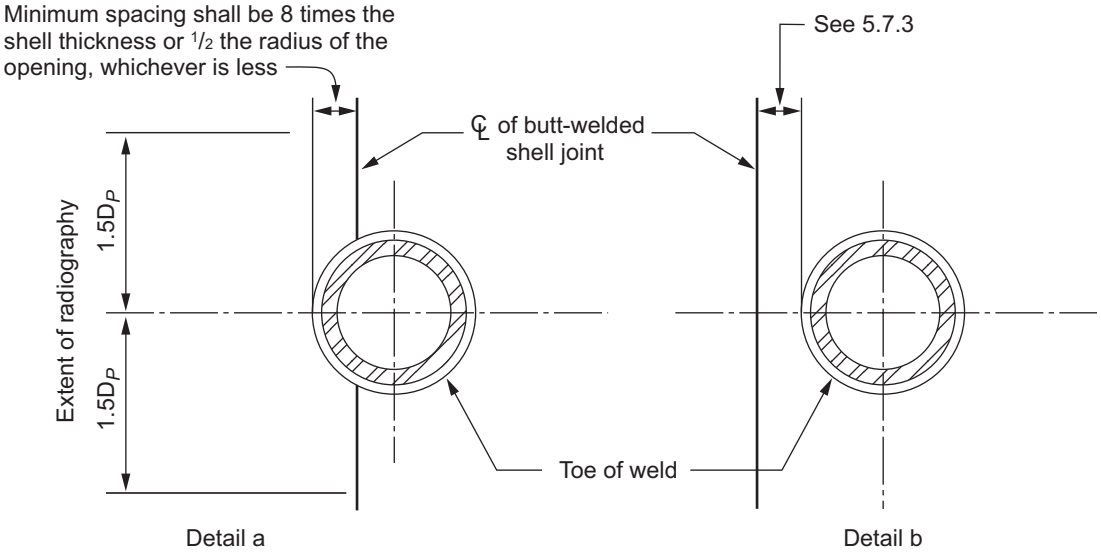

Penetration Without Reinforcing Plate

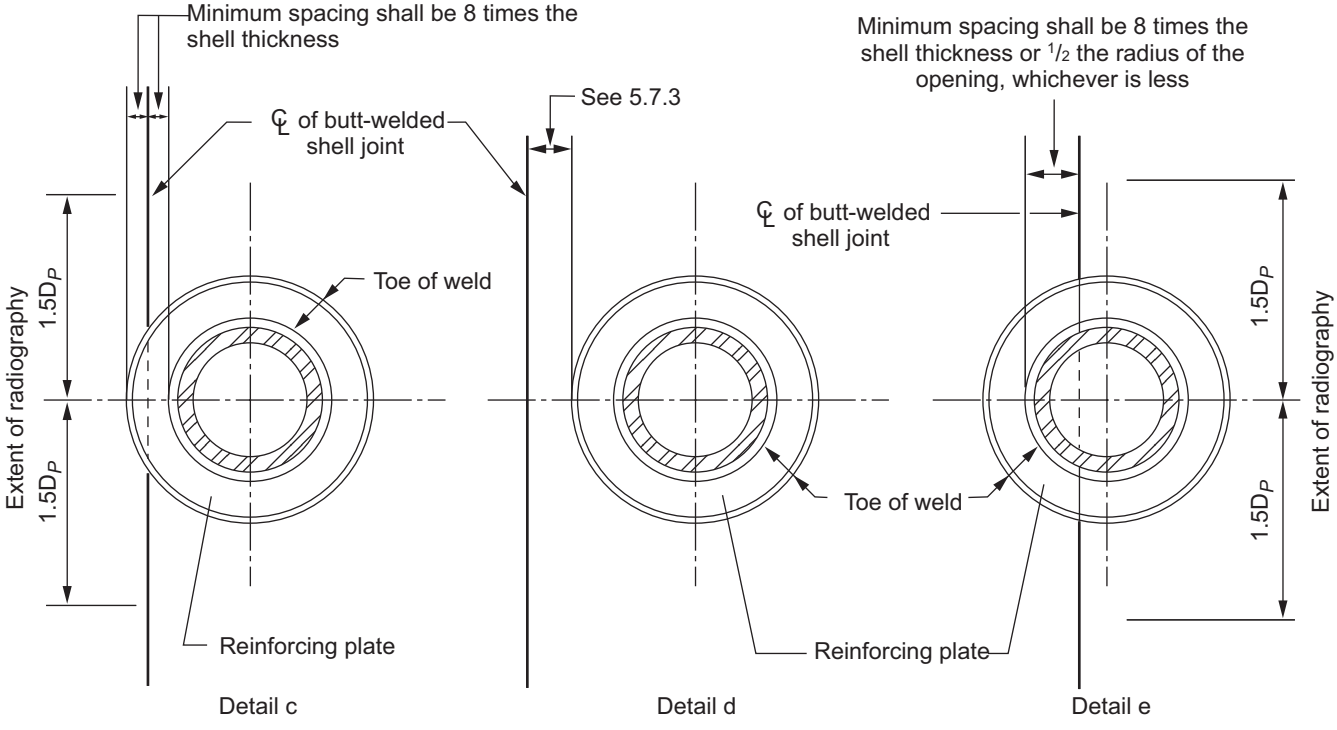

Penetration With Reinforcing Plate

Figure 5.9—Minimum Spacing of Welds and Extent of Related Radiographic Examination

5.7.4.4 Examination after stress relief shall be in accordance with 7.2.3.6 or 7.2.3.7.

• **5.7.4.5** When it is impractical to stress relieve at a minimum temperature of 600 °C (1100 °F), it is permissible, subject to the Purchaser's agreement, to carry out the stress-relieving operation at lower temperatures for longer periods of time in accordance with the tabulation below. The lower temperature/longer time PWHT may not provide material toughness and residual stresses equivalent to that using the higher temperature/shorter time PWHT; therefore, a review by a knowledgeable metallurgist and possible verification by mill testing of heat-treated coupons and/or testing of welded plates shall be considered. See Line 23 of the Data Sheet for any Purchaser-specified requirements applicable to this heat-treatment option.

Minimum Stress-Relieving Temperature		Holding Time (hours per 25 mm [1 in.] of thickness)	See Note
(°C)	(°F)		
600	1100	1	1
570	1050	2	1
540	1000	4	1
510	950	10	1, 2
480 (min.)	900 (min.)	20	1, 2

NOTE 1 For intermediate temperatures, the time of heating shall be determined by straight line interpolation.

NOTE 2 Stress relieving at these temperatures is not permitted for A537 Class 2 material.

5.7.4.6 When used in stress-relieved assemblies, the material of quenched and tempered steels A537, Cl 2, and A678, Grade B, and of TMCP steel A841 shall be represented by test specimens that have been subjected to the same heat treatment as that used for the stress relieved assembly.

5.7.5 Shell Manholes

5.7.5.1 Shell manholes shall conform to Figure 5.7a and Figure 5.7b and Table 5.3a through Table 5.5b (or Table 5.6a through Table 5.8b), but other shapes are permitted by 5.7.1.8. Manhole reinforcing plates or each segment of the plates if they are not made in one piece shall be provided with a 6 mm ($^1/_4$ in.) diameter telltale hole (for detection of leakage through the interior welds). Each hole shall be located on the horizontal centerline and shall be open to the atmosphere.

• **5.7.5.2** Manholes shall be of built-up welded construction. The dimensions are listed in Tables 5.3a through 5.5b. The dimensions are based on the minimum neck thicknesses listed in Tables 5.4a and 5.4b. When corrosion allowance is specified to be applied to shell manholes, corrosion allowance is to be added to the minimum neck, cover plate, and bolting flange thicknesses of Table 5.3a, Table 5.3b, Table 5.4a, and Table 5.4b.

5.7.5.3 The maximum diameter D_p of a shell cutout shall be as listed in Column 3 of Table 5.7a and Table 5.7b. Dimensions for required reinforcing plates are listed in Table 5.6a and Table 5.6b.

5.7.5.4 The gasket materials shall meet service requirements based on the product stored, maximum design temperature, and fire resistance. Gasket dimensions, when used in conjunction with thin-plate flanges described in Figure 5.7a, have proven effective when used with soft gaskets, such as non-asbestos fiber with suitable binder. When using hard gaskets, such as solid metal, corrugated metal, metal-jacketed, and spiral-wound metal, the gasket dimensions, manhole flange, and manhole cover shall be designed per API Standard 620, Section 3.20 and Section 3.21. See 4.9 for additional requirements.

5.7.5.5 In lieu of using Figure 5.7a or design per API 620, forged flanges and forged blind flanges may be furnished per 4.6.

5.7.6 Shell Nozzles and Flanges

- **5.7.6.1.a** Unless otherwise specified, shell nozzle flanges, excluding manholes, in sizes NPS 1 1/2 through NPS 20 and NPS 24 shall meet the requirements of ASME B16.5. For sizes larger than NPS 24 but not greater than NPS 60, flanges shall meet the requirements of ASME B16.47, Series A or Series B. Series A and Series B flanges are not compatible in all sizes and must be carefully selected to match the mating flange. If diameters, materials of construction, and flange styles of ASME B16.47 are unavailable, fabricated flanges with drilling template (bolt circle diameter, number of holes, and hole diameter) matching Series A or Series B shall be used. These fabricated flanges shall be designed in accordance with the ASME *Boiler and Pressure Vessel Code,* Section VIII, Division 1, Section UG-34 and Annex 2. The allowable stresses for design shall be a matter of agreement between the Purchaser and the Manufacturer. Bolt holes shall straddle the vertical centerline of the flange.

- **5.7.6.1.b** Shell nozzles (and flanges, if specified by the Purchaser as an alternate to a. above) shall conform to Figure 5.7b, Figure 5.8, and Figure 5.10 and Tables 5.6a through 5.8b, but other shapes are permitted by 5.7.1.8. An alternative connection design is permissible for the nozzle end that is not welded to the shell, if it provides equivalent strength, toughness, leak tightness, and utility and if the Purchaser agrees to its use in writing.

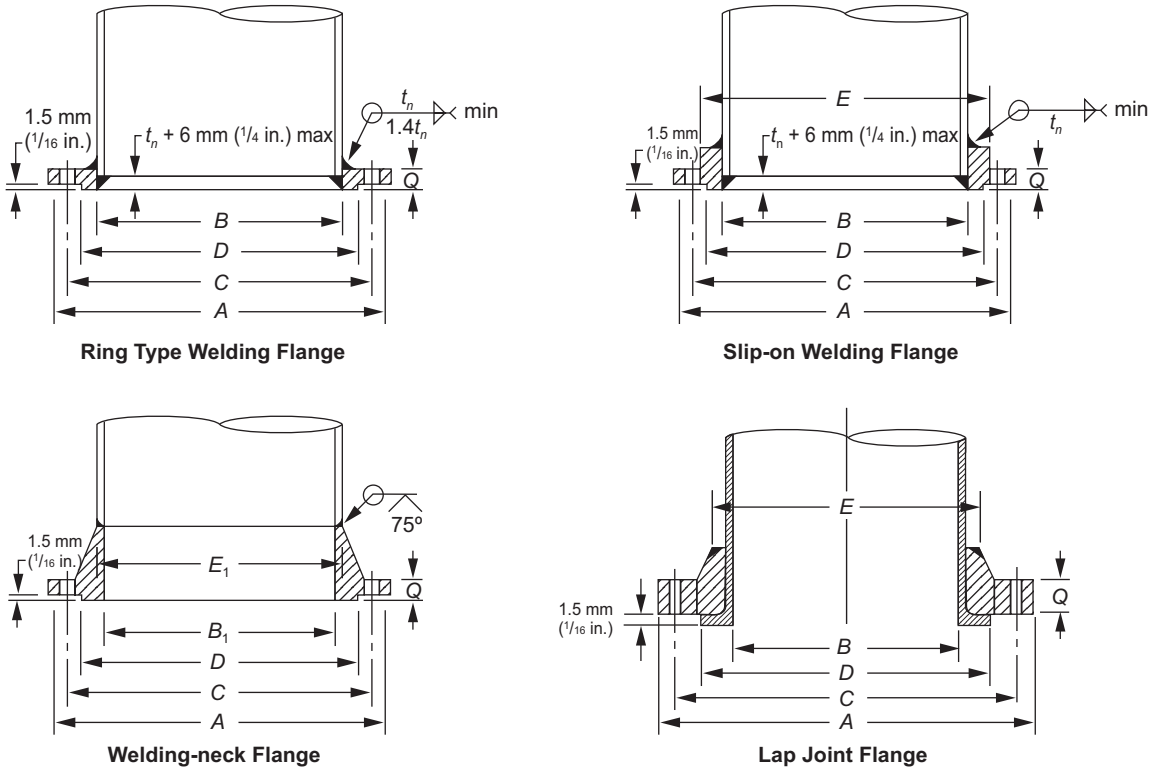

NOTE The t_n designated for weld thickness is the nominal pipe wall thickness (see Tables 5-6a, 5-6b, 5-7a, and 5-7b).

Figure 5.10—Shell Nozzle Flanges (see Table 5.8a and Table 5.8b)

- **5.7.6.2** Unless shell nozzles are specified to be flush on the inside of the tank shell by the Purchaser, shell nozzles without internal piping in a tank without a floating roof may be supplied flush or with an internal projection at the option of the Manufacturer. In floating roof tanks, shell nozzles without internal piping within operating range of the floating roof shall be supplied flush on the inside of the tank shell unless agreed otherwise between the Manufacturer and the Purchaser.

5.7.6.3 The details and dimensions specified in this standard are for nozzles installed with their axes perpendicular to the shell plate. A nozzle may be installed at an angle other than 90 degrees to the shell plate in a horizontal plane, provided the width of the reinforcing plate (W or D_o in Figure 5.8 and Table 5.6a and Table 5.6b) is increased by the amount that the horizontal chord of the opening cut in the shell plate (D_p in Figure 5.8 and Table 5.7a and Table 5.7b) increases as the opening is changed from circular to elliptical for the angular installation. In addition, nozzles not larger than NPS 3—for the insertion of thermometer wells, for sampling connections, or for other purposes not involving the attachment of extended piping—may be installed at an angle of 15 degrees or less off perpendicular in a vertical plane without modification of the nozzle reinforcing plate.

5.7.6.4 The minimum nominal thickness of nozzle necks to be used shall be equal to the required thickness as identified by the term t_n in Table 5.6a and Table 5.6b, Column 3.

5.7.7 Flush-Type Cleanout Fittings

5.7.7.1 Flush-type cleanout fittings shall conform to the requirements of 5.7.7.2 through 5.7.7.12 and to the details and dimensions shown in Figure 5.12 and Figure 5.13 and Tables 5.9a through 5.11b. When a size intermediate to the sizes given in Tables 5.9a through 5.11b is specified by the Purchaser, the construction details and reinforcements shall conform to the next larger opening listed in the tables. The size of the opening or tank connection shall not be larger than the maximum size given in the appropriate table.

5.7.7.2 The opening shall be rectangular, but the upper corners of the opening shall have a radius (r_1) as shown in Table 5.9a and Table 5.9b. When the shell material is Group I, II, III, or IIIA, the width or height of the clear opening shall not exceed 1200 mm (48 in.); when the shell material is Group IV, IVA, V, or VI, the height shall not exceed 900 mm (36 in.).

5.7.7.3 The reinforced opening shall be completely preassembled into a shell plate, and the completed unit, including the shell plate at the cleanout fitting, shall be thermally stress-relieved as described in 5.7.4 (regardless of the thickness or strength of the material).

5.7.7.4 The required cross-sectional area of the reinforcement over the top of the opening shall be calculated for Design Condition as well as Hydrostatic Test Condition as follows:

$$A_{cs} \geq \frac{K_1 h t}{2}$$

where

A_{cs} is the required cross-sectional area of the reinforcement over the top of the opening, in mm^2 (in.^{2});

K_1 is the area coefficient from Figure 5.11;

h is the vertical height of clear opening, in mm (in.);

t is the calculated thickness of the lowest shell course, in mm (in.), required by the formulas of 5.6.3, 5.6.4, or A.4.1 (with joint efficiency E = 1.0), including corrosion allowance, where applicable.

5.7.7.5 The nominal thickness of the shell plate in the flush-type cleanout fitting assembly shall be at least as thick as the adjacent shell plate nominal thickness in the lowest shell course. The nominal thickness of the shell reinforcing plate and the neck plate shall be, as a minimum, the thickness of the shell plate in the cleanout-opening assembly.

The reinforcement in the plane of the shell shall be provided within a height L above the bottom of the opening. L shall not exceed 1.5h except that, in the case of small openings, $L - h$ shall not be less than 150 mm (6 in.). Where this exception results in an L that is greater than 1.5h, only the portion of the reinforcement that is within the height of 1.5h

shall be considered effective. The reinforcement required may be provided by any one or any combination of the following.

a) The shell reinforcing plate.

b) Any thickness of the shell plate in the flush-type cleanout fitting assembly that is greater than the required thickness of lowest shell course, as determined by 5.6.3, 5.6.4, or A.4.1 (with joint efficiency E = 1.0).

c) The portion of the neck plate having a length equal to the nominal thickness of the reinforcing plate.

Reinforcing area provided shall be adequate for Design Conditions as well as Hydrostatic test Conditions.

Vertical axis in SI units:

$$\left[\frac{(H + 8.8)D + 71.5}{1.408h}\right]\left[\frac{123t}{4.9\mathrm{D}\,(H - 0.3)}\right]^{0.5}$$

Vertical axis in US Customary units:

$$\left[\frac{(H + 29)D + 770}{385h}\right]\left[\frac{17{,}850t}{2.6D\,(H - 1)}\right]^{0.5}$$

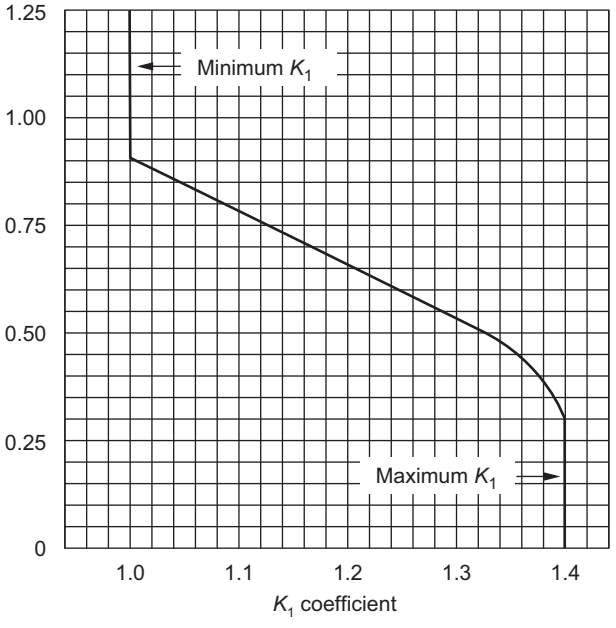

Figure 5.11—Area Coefficient for Determining Minimum Reinforcement of Flush-type Cleanout Fittings

5.7.7.6 The minimum width of the tank-bottom reinforcing plate at the centerline of the opening shall be 250 mm (10 in.) plus the combined nominal thickness of the shell plate in the cleanout-opening assembly and the shell reinforcing plate.

The nominal thickness of the bottom reinforcing plate shall be not less than that determined by the following equation:

In SI units:

$$t_b = \frac{h^2}{360{,}000} + \frac{b}{170}\sqrt{HG} + CA$$

where

t_b is the minimum thickness of the bottom reinforcing plate, in mm;

h is the vertical height of clear opening, in mm;

b is the horizontal width of clear opening, in mm;

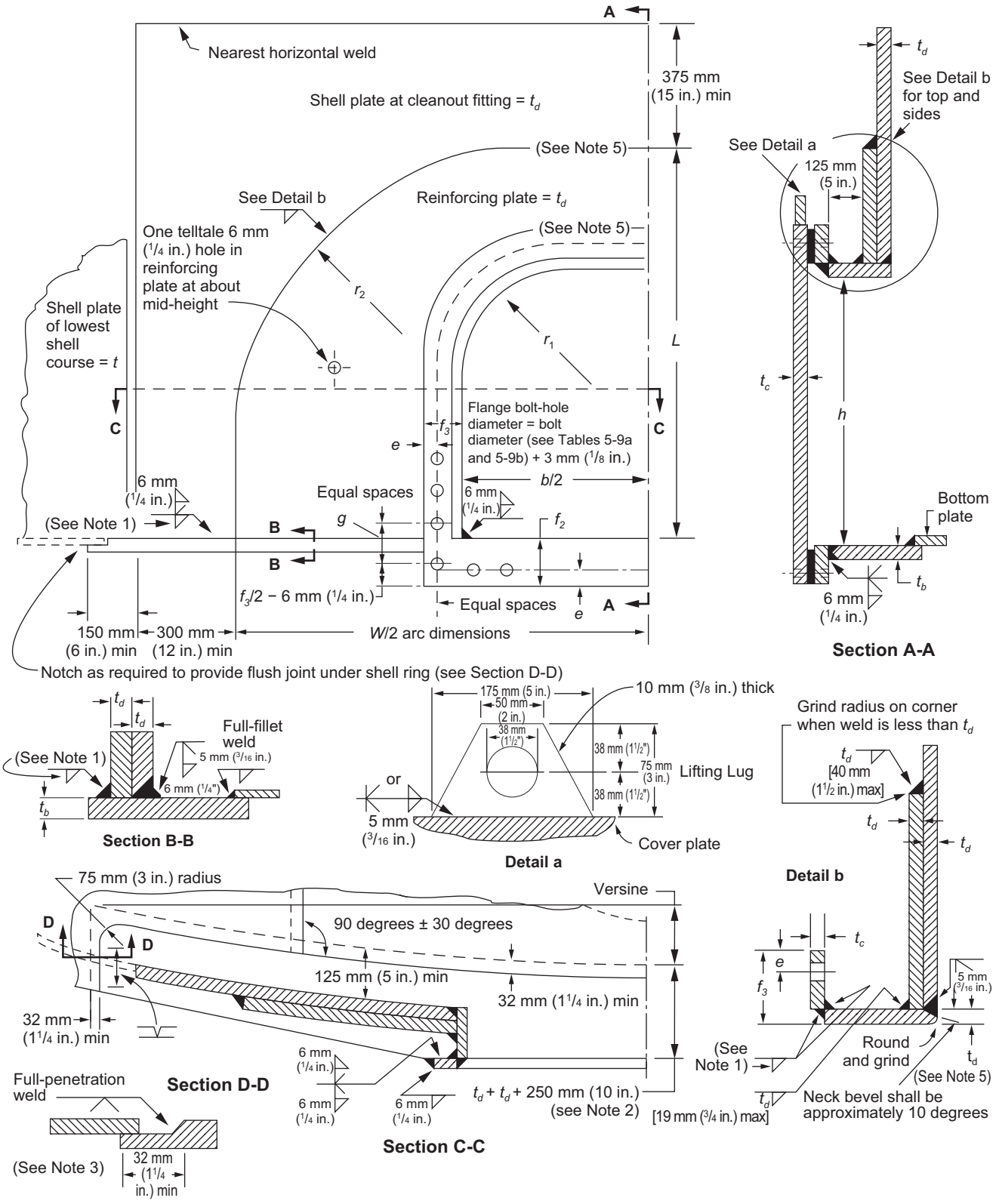

Figure 5.12—Flush-Type Cleanout Fittings (see Tables 5.9a, 5.9b, 5.10a, 5.10b, 5.11a, and 5.11b)

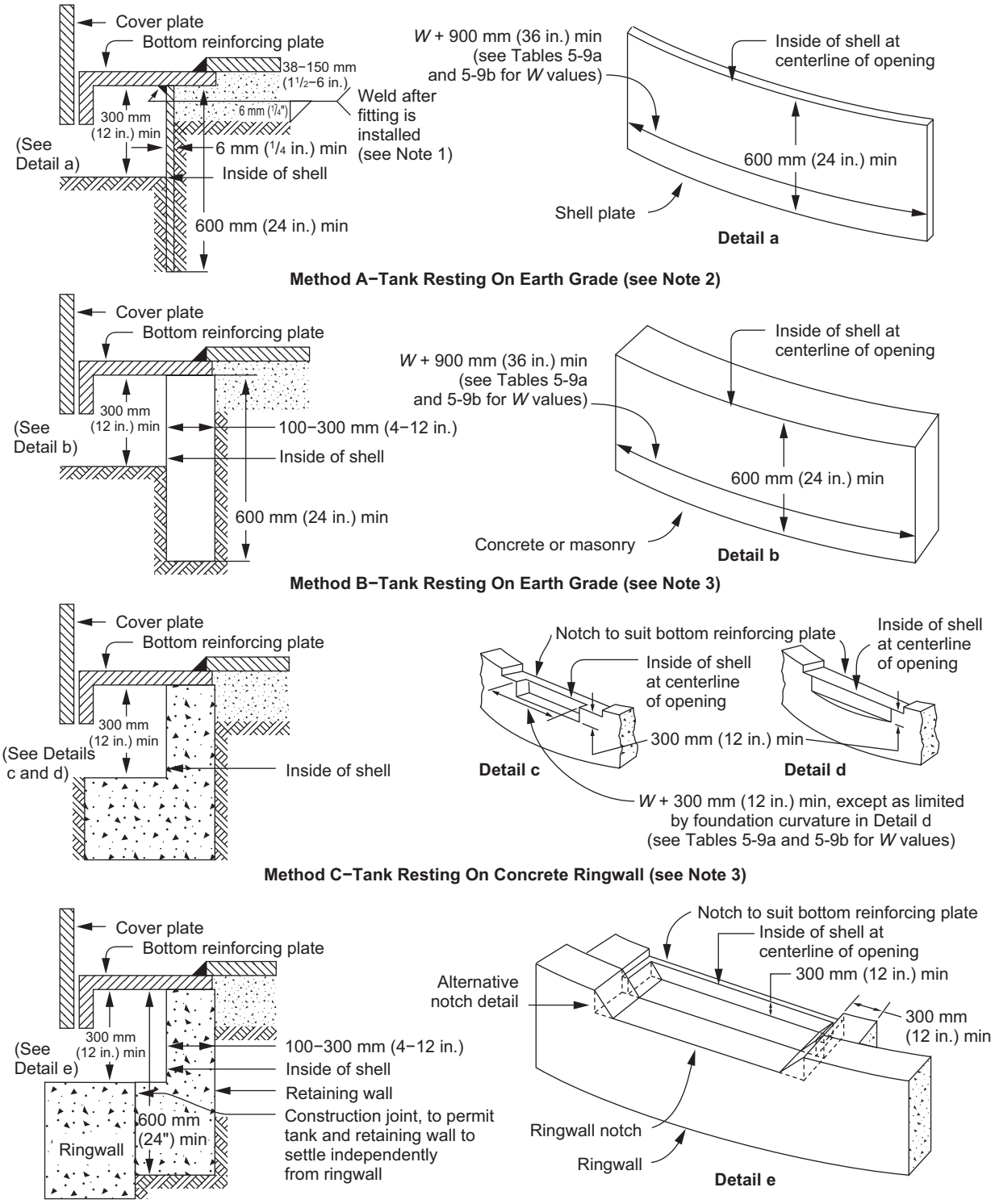

Figure 5.13—Flush-type Cleanout Fitting Supports (see 5.7.7)

H is the maximum design liquid level (see 5.6.3.2), in m;

G is the specific gravity, not less than 1.0.

In USC units:

$$t_b = \frac{h^2}{14{,}000} + \frac{b}{310}\sqrt{HG} + CA$$

where

t_b is the minimum thickness of the bottom reinforcing plate, in inches;

h is the vertical height of clear opening, in inches;

b is the horizontal width of clear opening, in inches;

H is the maximum design liquid level (see 5.6.3.2), in feet;

G is the specific gravity, not less than 1.0.

5.7.7.7 The dimensions of the cover plate, bolting flange, bolting, and bottom-reinforcing plate shall conform to Table 5.9a, Table 5.9b, Table 5.10a and Table 5.10b. When corrosion allowance is specified, it is to be added to the cover plate, bolting flange thicknesses, and bottom-reinforcing plate.

5.7.7.8 All materials in the flush-type cleanout fitting assembly shall conform to the requirements in Section 4. The shell plate containing the cleanout assembly, the shell reinforcing plate, the neck plate, and the bottom reinforcing plate shall meet the impact test requirements of 4.2.9 and Figure 4.1 for the respective thickness involved at the design metal temperature for the tank. The notch toughness of the bolting flange and the cover plate shall be based on the governing thickness as defined in 4.5.5.3 using Table 4.3a, Table 4.3b, and Figure 4.1. Additionally, the yield strength and the tensile strength of the shell plate at the flush-type cleanout fitting, the shell reinforcing plate, and the neck plate shall be equal to, or greater than, the yield strength and the tensile strength of the adjacent lowest shell course plate material.

5.7.7.9 The dimensions and details of the cleanout-opening assemblies covered by this section are based on internal hydrostatic loading with no external-piping loading.

5.7.7.10 When a flush-type cleanout fitting is installed on a tank that is resting on an earth grade without concrete or masonry walls under the tank shell, provision shall be made to support the fitting and retain the grade by either of the following methods:

a) Install a vertical steel bulkhead plate under the tank, along the contour of the tank shell, symmetrical with the opening, as shown in Figure 5.13, Method A.

b) Install a concrete or masonry retaining wall under the tank with the wall's outer face conforming to the contour of the tank shell as shown in Figure 5.13, Method B.

5.7.7.11 When a flush-type cleanout fitting is installed on a tank that is resting on a ringwall, a notch with the dimensions shown in Figure 5.13, Method C, shall be provided to accommodate the cleanout fitting.

5.7.7.12 When a flush-type cleanout fitting is installed on a tank that is resting on an earth grade inside a foundation retaining wall, a notch shall be provided in the retaining wall to accommodate the fitting, and a supplementary inside retaining wall shall be provided to support the fitting and retain the grade. The dimensions shall be as shown in Figure 5.13, Method D.

5.7.8 Flush-Type Shell Connections

• **5.7.8.1** Tanks may have flush-type connections at the lower edge of the shell. Each connection may be made flush with the flat bottom under the following conditions (see Figure 5.14).

a) The shell uplift from the internal design and test pressures (see Annex F) and wind and earthquake loads (see Annex E) shall be counteracted so that no uplift will occur at the cylindrical-shell/flat-bottom junction.

b) The vertical or meridional membrane stress in the cylindrical shell at the top of the opening for the flush-type connection shall not exceed one-tenth of the circumferential design stress in the lowest shell course containing the opening.

c) The maximum width, b, of the flush-type connection opening in the cylindrical shell shall not exceed 900 mm (36 in.).

d) The maximum height, h, of the opening in the cylindrical shell shall not exceed 300 mm (12 in.).

e) The thickness, t_a, of the bottom-transition plate in the assembly shall be 13 mm ($^1/_2$ in.) minimum or, when specified, the same as the thickness of the tank annular plate.

5.7.8.2 The details of the connection shall conform to those shown in Figure 5.14, and the dimensions of the connection shall conform to Table 5.12a and Table 5.12b and to the requirements of 5.7.8.3 through 5.7.8.11.

Table 5.12a—Dimensions for Flush-Type Shell Connections (SI)

Dimensions in millimeters

Class 150 Nominal Height of Flange Size	Height of Opening h	Width of Opening b	Arc Width of Shell Reinforcing Plate W	Upper Corner Radius of Opening r_1	Lower Corner Radius of Shell Reinforcing Plate r_2
8	200	200	950	OD of 8 NPS[a]	350
12	300	300	1300	OD of 12 NPS[a]	450
16	300	500	1600	150	450
18	300	550	1650	150	450
20	300	625	1725	150	450
24	300	900	2225	150	450

[a] For circular openings, this value will be $^1/_2$ of the ID based on the nozzle neck specified.

NOTE See Figure 5.14.

5.7.8.3 The reinforced connection shall be completely preassembled into a shell plate. The completed assembly, including the shell plate containing the connection, shall be thermally stress-relieved at a temperature of 600 °C to 650 °C (1100 °F to 1200 °F) for 1 hour per 25 mm (1 in.) of shell-plate thickness, t_d (see 5.7.4.1 and 5.7.4.2).

5.7.8.4 The reinforcement for a flush-type shell connection shall meet the following requirements:

a) The cross-sectional area of the reinforcement over the top of the connection shall not be less than $K_1ht/2$ (see 5.7.7.4).

b) The nominal thickness of the shell plate, t_d, for the flush-connection assembly shall be at least as thick as the adjacent shell plate nominal thickness, t, in the lowest shell course.

c) The nominal thickness of the shell reinforcing plate shall be, as a minimum, the nominal thickness of the shell plate in the flush-connection assembly.

Table 5.12b—Dimensions for Flush-Type Shell Connections (USC)

Dimensions in inches

Class 150 Nominal Height of Flange Size	Height of Opening h	Width of Opening b	Arc Width of Shell Reinforcing Plate W	Upper Corner Radius of Opening r_1	Lower Corner Radius of Shell Reinforcing Plate r_2
8	$8\frac{5}{8}$	$8\frac{5}{8}$	38	4[a]	14
12	$12\frac{3}{4}$	$12\frac{3}{4}$	52	4[a]	18
16	12	20	64	6	18
18	12	22	66	6	18
20	12	25	69	6	18
24	12	36	89	6	18

[a] For circular openings, this value will be $\frac{1}{2}$ of the ID based on the nozzle neck specified.

NOTE See Figure 5.14.

d) The reinforcement in the plane of the shell shall be provided within a height L above the bottom of the opening. L shall not exceed 1.5h except that, in the case of small openings, $L - h$ shall not be less than 150 mm (6 in.). Where this exception results in an L that is greater than 1.5h, only the portion of the reinforcement that is within the height of 1.5h shall be considered effective.

e) The required reinforcement may be provided by any one or any combination of the following:

1) the shell reinforcing plate;

2) any thickness of the shell plate in the flush-type shell connection assembly that is greater than the required thickness of lowest shell course, as determined by 5.6.3, 5.6.4, or A.4.1 (with joint efficiency E = 1.0); and

3) the portion of the neck plate having a length equal to the thickness of the reinforcing plate.

Reinforcing area provided shall be adequate for Design Conditions as well as Hydrostatic Test Conditions.

f) The width of the tank-bottom reinforcing plate at the centerline of the opening shall be 250 mm (10 in.) plus the combined nominal thickness of the shell plate in the flush-connection assembly and the shell reinforcing plate. The thickness of the bottom reinforcing plate shall be calculated by the following equation (see 5.7.7.6):

In SI units:

$$t_b = \frac{h^2}{360{,}000} + \frac{b}{170}\sqrt{HG} + CA$$

where

t_b is the minimum thickness of the bottom reinforcing plate, in mm;

h is the vertical height of clear opening, in mm;

b is the horizontal width of clear opening, in mm;

H is the maximum design liquid level (see 5.6.3.2), in m;

G is the specific gravity, not less than 1.0.

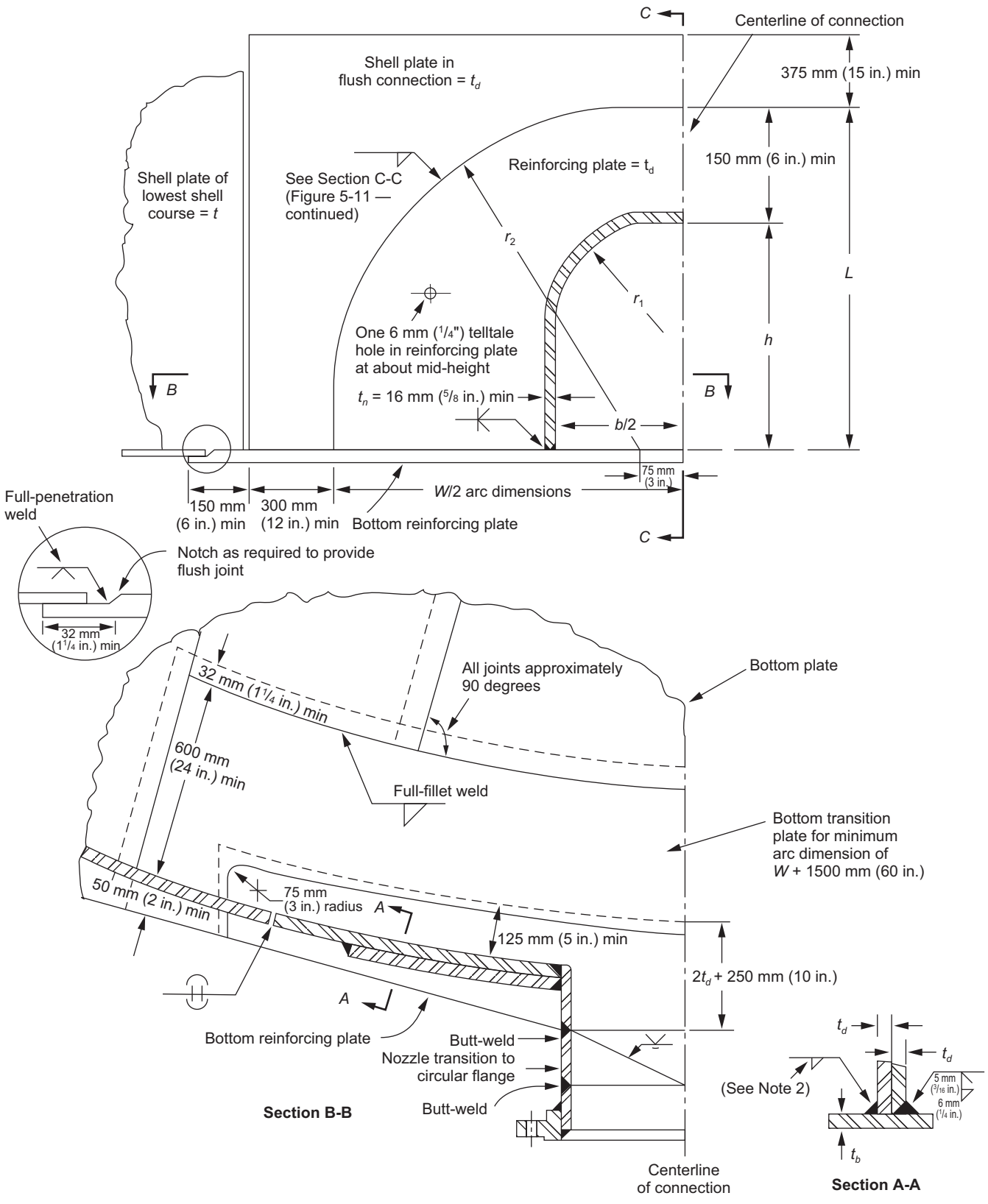

Figure 5.14—Flush-type Shell Connection

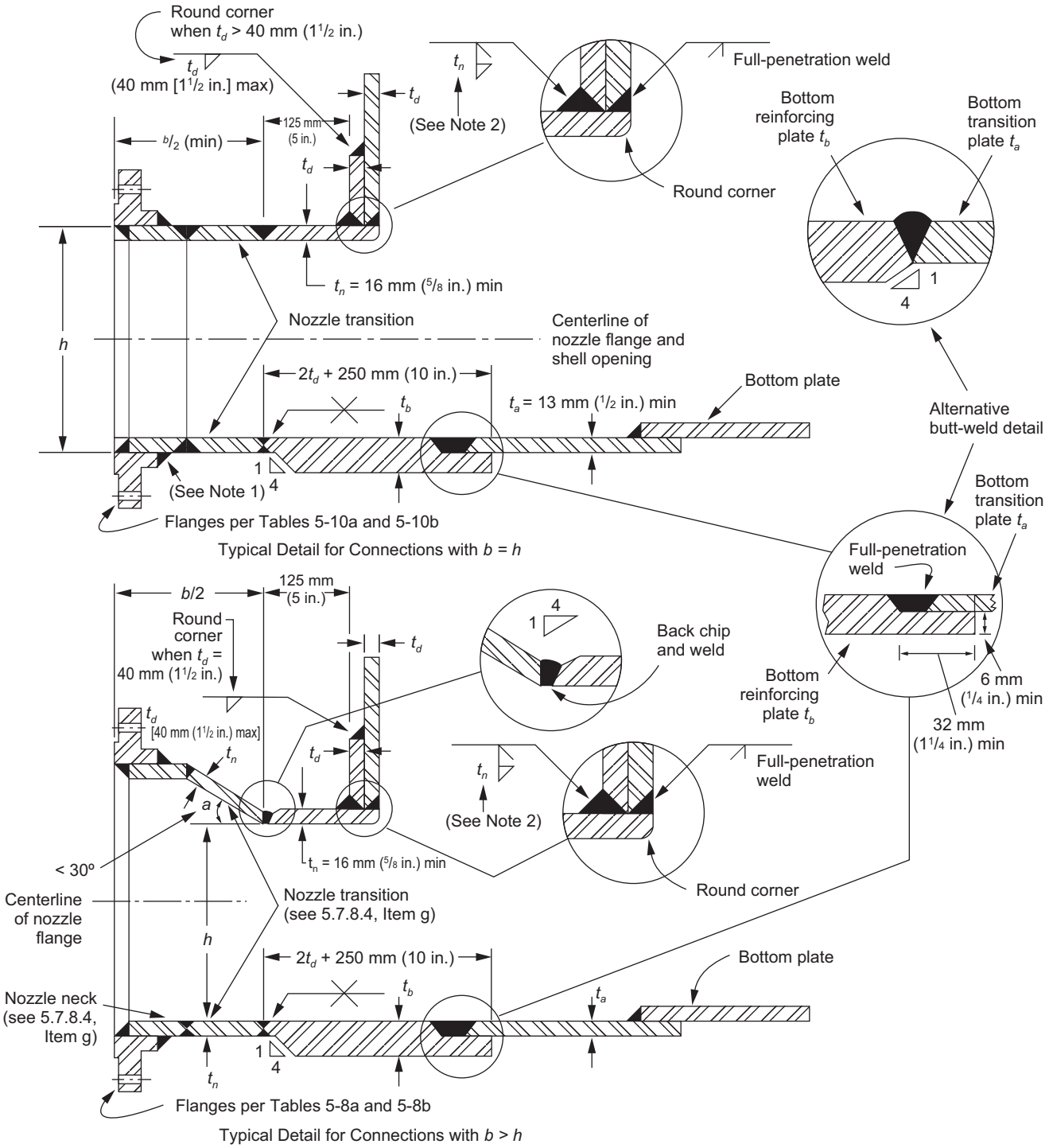

Section C-C

Note 1: Flange weld sizes shall be the smaller of the available hub material for t_n.
Note 2: Thickness of thinner plate joined 13 mm (1/2 in.) maximum.

Figure 5.14—Flush-type Shell Connection (Continued)

In USC units:

$$t_b = \frac{h^2}{14{,}000} + \frac{b}{310}\sqrt{HG} + CA$$

where

t_b is the minimum thickness of the bottom reinforcing plate, in inches;

h is the vertical height of clear opening, in inches;

b is the horizontal width of clear opening, in inches;

H is the maximum design liquid level (see 5.6.3.2), in feet;

G is the specific gravity, not less than 1.0.

The minimum value of t_b shall be:

16 mm ($^5/_8$ in.) for $HG \leq 14.4$ m (48 ft)

17 mm ($^{11}/_{16}$ in.) for 14.4 m (48 ft) < $HG \leq$ 16.8 m (56 ft)

19 mm ($^3/_4$ in.) for 16.8 m (56 ft) < $HG \leq$ 19.2 m (64 ft)

g) The corroded thickness of the nozzle neck and transition piece, t_n, shall be not less than 16 mm ($^5/_8$ in.). External loads applied to the connection may require t_n to be greater than 16 mm ($^5/_8$ in.).

5.7.8.5 All materials in the flush-type shell connection assembly shall conform to the requirements in Section 4. The material of the shell plate in the connection assembly, the shell reinforcing plate, the nozzle neck attached to the shell, the transition piece, and the bottom reinforcing plate shall conform to 4.2.9 and Figure 4.1 for the respective thickness involved at the design metal temperature for the tank. The notch toughness of the bolting flange and the nozzle neck attached to the bolting flange shall be based on the governing thickness as defined in 4.5.5.3 and used in Figure 4.1. Additionally, the yield strength and the tensile strength of the shell plate at the flush-type shell connection and the shell reinforcing plate shall be equal to, or greater than, the yield strength and the tensile strength of the adjacent lowest shell course plate material.

5.7.8.6 The nozzle transition between the flush connection in the shell and the circular pipe flange shall be designed in a manner consistent with the requirements of this standard. Where this standard does not cover all details of design and construction, the Manufacturer shall provide details of design and construction that will be as safe as the details provided by this standard.

5.7.8.7 Where anchoring devices are required by Annex E and Annex F to resist shell uplift, the devices shall be spaced so that they will be located immediately adjacent to each side of the reinforcing plates around the opening.

5.7.8.8 Adequate provision shall be made for free movement of connected piping to minimize thrusts and moments applied to the shell connection. Allowance shall be made for the rotation of the shell connection caused by the restraint of the tank bottom-to-shell expansion from stress and temperature as well as for the thermal and elastic movement of the piping. Rotation of the shell connection is shown in Figure 5.15.

5.7.8.9 The foundation in the area of a flush-type connection shall be prepared to support the bottom reinforcing plate of the connection. The foundation for a tank resting on a concrete ringwall shall provide uniform support for both the bottom reinforcing plate and the remaining bottom plate under the tank shell. Different methods of supporting the bottom reinforcing plate under a flush-type connection are shown in Figure 5.13.

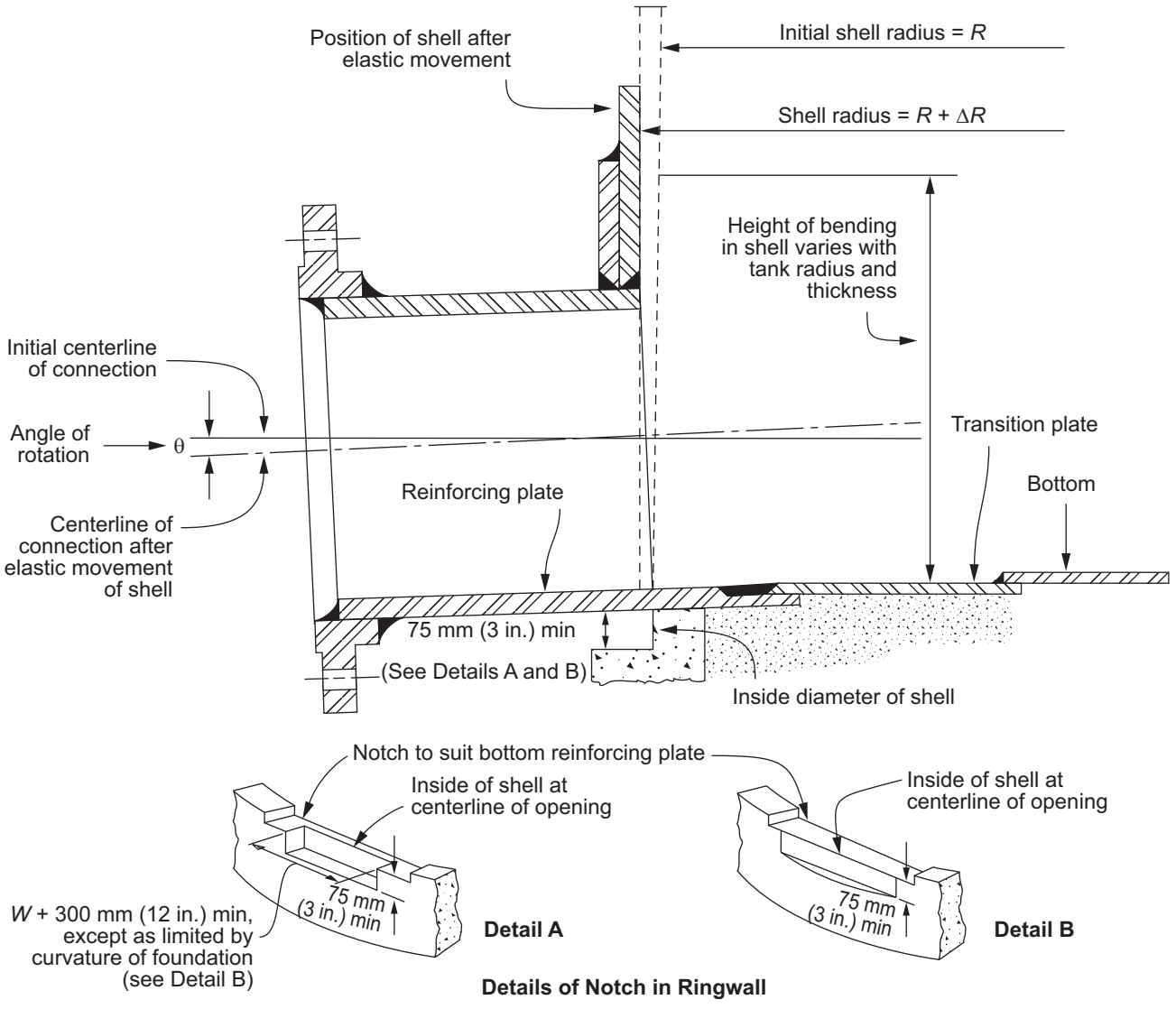

Figure 5.15—Rotation of Shell Connection

5.7.8.10 Flush-type connections may be installed using a common reinforcing pad; however, when this construction is employed, the minimum distance between nozzle centerlines shall not be less than 1.5 [$b_1 + b_2$ + 65 mm (2 1/2 in.)], where b_1 and b_2 are the widths of adjacent openings, or 600 mm (24 in.), whichever is greater. The width of each opening, b, shall be obtained from Table 5.12a and Table 5.12b for the respective nominal flange size. Adjacent shell flush-type connections that do not share a common reinforcing plate shall have at least a 900 mm (36 in.) clearance between the ends of their reinforcing plates.

5.7.8.11 All longitudinal butt-welds in the nozzle neck and transition piece, if any, and the first circumferential butt-weld in the neck closest to the shell, excluding neck-to-flange weld, shall receive 100 % radiographic examination (see 8.1). The nozzle-to-tank-shell and reinforcing plate welds and the shell-to-bottom reinforcing plate welds shall be examined for their complete length by magnetic particle examination (see 8.2). The magnetic particle examination shall be performed on the root pass, on every 13 mm (1/2 in.) of deposited weld metal while the welds are made, and on the completed welds. The completed welds shall also be visually examined. The examination of the completed welds shall be performed after stress-relieving but before hydrostatic testing (see 8.2 and 8.5 for the appropriate inspection and repair criteria).

5.8 Shell Attachments and Tank Appurtenances

5.8.1 Shell Attachments

5.8.1.1 Shell attachments shall be made, inspected, and removed in conformance with Section 7.

a) Permanent attachments are items welded to the shell that will remain while the tank is in its intended service. These include items such as wind girders, stairs, gauging systems, davits, walkways, tank anchors, supports for internal items such as heating coils and other piping supports, ladders, floating roof supports welded to the shell, exterior piping supports, grounding clips, insulation rings, and electrical conduit and fixtures. Items installed above the maximum liquid level of the tank are not permanent attachments.

b) Temporary attachments are items welded to the shell that will be removed prior to the tank being commissioned into its intended service. These include items such as alignment clips, fitting equipment, stabilizers, and lifting lugs.

5.8.1.2 When attachments are made to shell courses of material in Group IV, IVA, V, or VI, the movement of the shell (particularly the movement of the bottom course) under hydrostatic loading shall be considered, and the attachments shall meet the following requirements:

a) Permanent attachments may be welded directly to the shell with fillet welds having a maximum leg dimension of 13 mm ($^1/_2$ in.). The edge of any permanent attachment welds shall be at least 75 mm (3 in.) from the horizontal joints of the shell and at least 150 mm (6 in.) from the vertical joints, insert-plate joints, or reinforcing-plate fillet welds. Permanent attachment welds may cross shell horizontal or vertical butt welds providing the welds are continuous within these limits and the angle of incidence between the two welds is greater than or equal to 45 degrees. Additionally, any splice weld in the permanent attachment shall be located a minimum of 150 mm (6 in.) from any shell weld unless the splice weld is kept from intersecting the shell weld by acceptable modifications to the attachment.

b) The welding and inspection of permanent attachments to these shell courses shall conform to 7.2.3.5.

c) Temporary attachments to shell courses shall preferably be made prior to welding of the shell joints. Weld spacing for temporary attachments made after welding of the shell joints shall be the same as that required for permanent attachments. Temporary attachments to shell courses shall be removed, and any resulting damage shall be repaired and ground to a smooth profile.

• 5.8.2 Bottom Connections

Connections to the tank bottom are permitted subject to agreement between the Purchaser and the Manufacturer with respect to details that provide strength, tightness, and utility equal to the details of shell connections specified in this standard.

5.8.3 Cover Plates

5.8.3.1 Unreinforced openings less than or equal to NPS 2 pipe size are permissible in flat cover plates without increasing the cover plate thickness if the edges of the openings are not closer to the center of the cover plate than one-fourth the height or diameter of the opening. Requirements for openings NPS 2 pipe size and smaller that do not satisfy the location requirement and for larger reinforced openings are given in 5.8.3.2 through 5.8.3.4.

5.8.3.2 Reinforced openings in the cover plates of shell manholes and flush-type clean outs shall be limited to one-half the diameter of the manhole or one-half the least dimension of the flush-type clean out opening but shall not exceed NPS 12 pipe size. The reinforcement added to an opening may be a reinforcing plate or an increased thickness of the cover plate, but in either case, the reinforcement shall provide an added reinforcing area no less than the cutout area of the opening in the cover plate.

A cover plate with a nozzle attachment for product-mixing equipment shall have a thickness at least 1.4 times greater than the thickness required by Table 5.3a and Table 5.3b. The added thickness (or pad plate) for replacement of the opening cutout in the cover plate shall be based on Table 5.3a and Table 5.3b. The 40 % increase in thickness within a radius of one diameter of the opening may be included as part of the area of replacement required. The mixer-nozzle attachment to the cover plate shall be a full-penetration weld. The manhole bolting-flange thickness shall not be less than 1.4 times the thickness required by Table 5.3a and Table 5.3b. The manhole nozzle neck shall be designed to support the mixer forces with a minimum thickness not less than the requirements of Table 5.4a and Table 5.4b without comparison to the increased bolting-flange thickness noted in this section.

5.8.3.3 When cover plates (or blind flanges) are required for shell nozzles, the minimum thickness shall be that given for flanges in Table 5.8a and Table 5.8b. Reinforced openings in the cover plates (or blind flanges) of shell nozzles shall be limited to one-half the diameter of the nozzle. The reinforcement added to an opening may be an added pad plate or an increased thickness of the cover plate, but in either case, the reinforcement shall provide an added reinforcing area no less than 50 % of the cutout area of the opening in the cover plate. Mixer nozzles may be attached to cover plates.

5.8.3.4 Openings in the cover plates of flush-type cleanout fittings shall be located on the vertical centerline of the cover plate and shall be in accordance with 5.8.3.1 and 5.8.3.2. Adequate provisions should be made for free movement of connected piping to minimize thrusts and moments on the cover plate to 2225 N (500 lbs) and 60 N-m (500 ft-lbs). Analysis or load leak test may be used to accept greater loads or moments.

5.8.3.5 Shell manhole covers shall have two handles. Those covers weighing more than 34 kg (75 lb) shall be equipped with either a hinge or davit to facilitate the handling of the manhole cover plate. The davit support arm shall not be welded directly to the shell without a reinforcing plate.

5.8.4 Roof Manholes

Roof manholes shall conform to Figure 5.16 and Table 5.13a and Table 5.13b. The effects of loads (other than normal personnel access) applied at the roof manhole and supporting roof structure shall be considered. Examples of such loads may include fall protection anchorage, hoisting, or personnel retrieval. The roof structure and plate around the manhole shall be reinforced as necessary.

5.8.5 Roof Venting

5.8.5.1 Tanks designed in accordance with this standard and having a fixed roof shall be vented for both normal conditions (resulting from operational requirements, including maximum filling and emptying rates, and atmospheric temperature changes) and emergency conditions (resulting from exposure to an external fire). Tanks with both a fixed roof and a floating roof satisfy these requirements when they comply with the circulation venting requirements of Annex H. All other tanks designed in accordance with this standard and having a fixed roof shall meet the venting requirements of 5.8.5.2 and 5.8.5.3.

5.8.5.2 Normal venting shall be adequate to prevent internal or external pressure from exceeding the corresponding tank design pressures and shall meet the requirements specified in API 2000 for normal venting.

- **5.8.5.3** Emergency venting requirements are satisfied if the tank is equipped with a weak roof-to-shell attachment (frangible joint) in accordance with 5.10.2.6, or if the tank is equipped with pressure relief devices meeting the requirements specified in API 2000 for emergency venting. When pressure relief devices are used to satisfy the emergency venting requirements, they shall achieve the flow rates specified in API 2000 without exceeding the following limits on internal pressure.

  a) For unanchored tanks, the pressure relief devices shall be adequate to prevent internal pressure from exceeding the tank design pressure as determined in F.4.1 (subject to the limitations in F.4.2 and F.4.3, as applicable). In calculating limitations per F.4.2, use M = 0.

Table 5.13a—Dimensions for Roof Manholes (SI)

Dimensions in millimeters

Column 1	Column 2	Column 3	Column 4	Column 5	Column 6	Column 7	Column 8	Column 9
Size of Manhole	Diameter of Neck ID[a]	Diameter of Cover Plate D_C	Diameter of Bolt Circle D_B	Number of Bolts	Diameter of Gasket		Diameter of Hole in Roof Plate or Reinforcing Plate D_P	Outside Diameter of Reinforcing Plate D_R
					Inside	Outside		
500	500	660	597	16	500	660	524	1050
600	600	762	699	20	600	762	625	1150

[a] Pipe may be used for neck, providing the minimum nominal wall thickness is 6 mm (ID and D_p shall be adjusted accordingly.)

NOTE See Figure 5.18.

Table 5.13b—Dimensions for Roof Manholes (USC)

Dimensions in inches

Column 1	Column 2	Column 3	Column 4	Column 5	Column 6	Column 7	Column 8	Column 9
Size of Manhole	Diameter of Neck ID[a]	Diameter of Cover Plate D_C	Diameter of Bolt Circle D_B	Number of Bolts	Diameter of Gasket		Diameter of Hole in Roof Plate or Reinforcing Plate D_P	Outside Diameter of Reinforcing Plate D_R
					Inside	Outside		
20	20	26	23 1/2	16	20	26	20 5/8	42
24	24	30	27 1/2	20	24	30	24 5/8	46

[a] Pipe may be used for neck, providing the minimum nominal wall thickness is 1/4 in. (ID and D_p shall be adjusted accordingly.)

NOTE See Figure 5.18.

b) For anchored tanks, except those designed to F.1.3, the pressure relief devices shall be adequate to prevent internal pressure from exceeding the tank design pressure as determined in F.4.1 (subject to the limitations in F.4.3, as applicable).

c) For tanks designed to F.1.3 (anchored tanks), the pressure relief devices shall be adequate to prevent internal pressure from exceeding the design pressure specified by the Purchaser.

• **5.8.5.4** The filling and emptying rates are specified on the Data Sheet, Line 7. See the Data Sheet, Table 3 for venting devices, which shall be specified by the Purchaser and verified by the Manufacturer.

• **5.8.5.5** All free vents shall be provided with corrosion-resistant coarse-mesh bird screens of a maximum opening size of (19 mm [3/4 in.] nominal opening). It is recommended that in areas where snow drifting or icing may be an issue, special attention to vent details (such as profile, diameter, capacity, arrangement, or increased screen size) should be made. In these situations the Purchaser shall specify modified venting requirements based on anticipated needs for a specific environment. The smallest dimension of the opening in any mesh used for bird screen is the governing size for the opening.

5.8.5.6 Flanged roof nozzles shall conform to Figure 5.19 and Table 5.14a and Table 5.14b. Slip-on flanges and weld neck flanges shall conform to the requirements of ASME B16.5 for Class 150 plate-ring flanges shall conform to

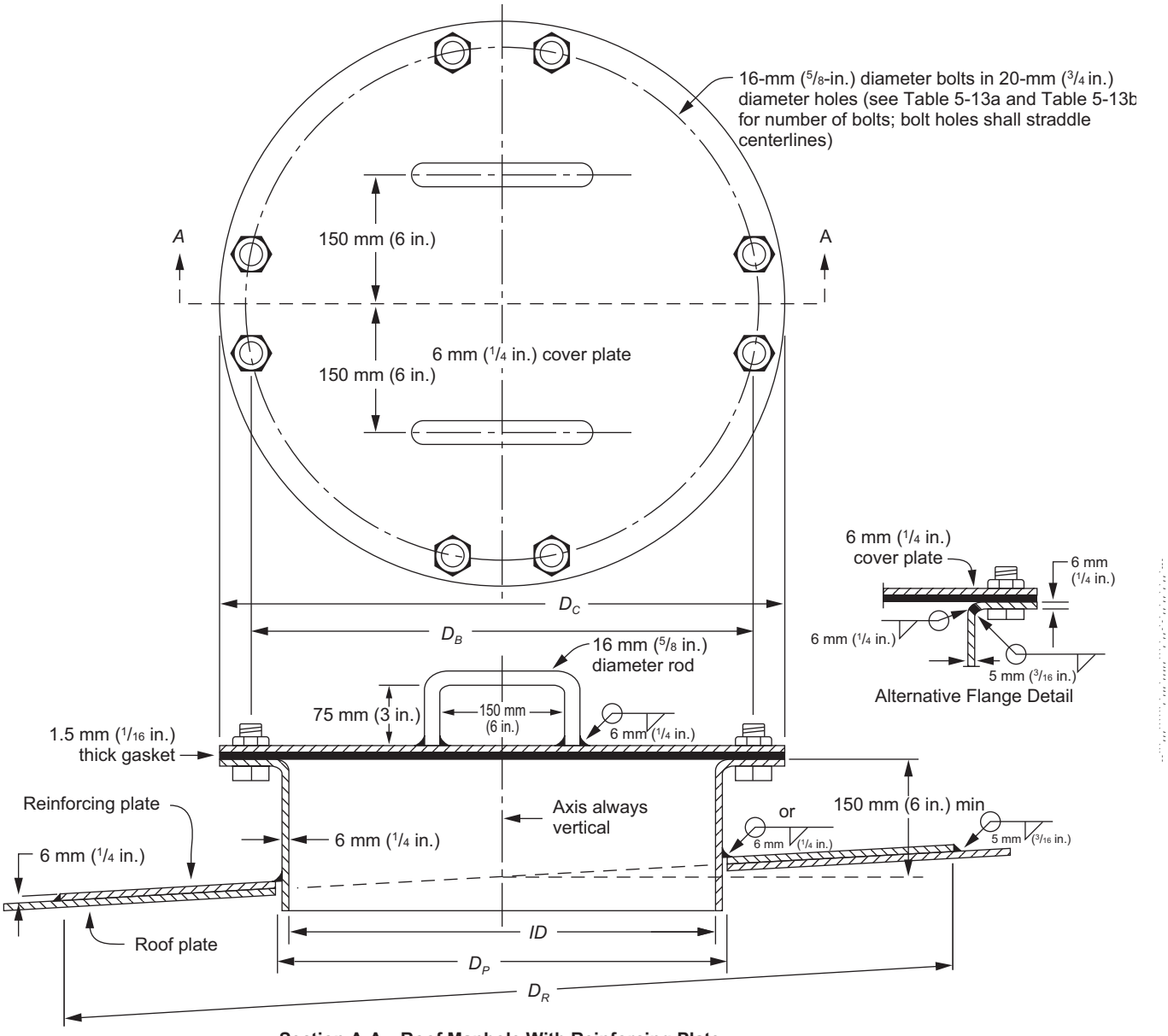

Section A-A—Roof Manhole With Reinforcing Plate

Base For Roof Manhole Without Reinforcing Plate

Figure 5.16—Roof Manholes (see Table 5.13a and Table 5.13b)

all of the dimensional requirements for slip-on welding flanges with the exception that it is acceptable to omit the extended hub on the back of the slip-on or weld neck flanges. Raised face flanges shall be provided for nozzles with attached piping. Flat face flanges shall be provided for roof nozzles used for the mounting of tank accessories.

5.8.5.7 Threaded roof nozzles shall conform to Figure 5.20 and Table 5.15a and Table 5.15b.

5.8.6 Rectangular Roof Openings

5.8.6.1 Rectangular roof openings shall conform to Figure 5.17 and Figure 5.18 and/or this section. The effects of loads (other than normal personnel access) applied at the roof opening and supporting roof structure shall be considered. Examples of such loads may include fall protection anchorage, hoisting, or personnel retrieval. The roof structure and plate around the opening shall be reinforced as necessary.

Table 5.14a—Dimensions for Flanged Roof Nozzles (SI)

Dimensions in millimeters

Column 1	Column 2	Column 3	Column 4	Column 5
Nozzle NPS	**Outside Diameter of Pipe Neck**	**Diameter of Hole in Roof Plate or Reinforcing Plate D_P**	**Minimum Height of Nozzle H_R**	**Outside Diameter of Reinforcing Plate[a] D_R**
1 1/2	48.3	50	150	125
2	60.3	65	150	175
3	88.9	92	150	225
4	114.3	120	150	275
6	168.3	170	150	375
8	219.1	225	150	450
10	273.0	280	200	550
12	323.8	330	200	600

[a] Reinforcing plates are not required on nozzles NPS 6 or smaller but may be used if desired.

NOTE See Figure 5.19.

5.8.6.2 The cover plate thickness and/or structural support shall be designed to limit maximum fiber stresses in accordance with this standard, however, cover plate thickness shall not be less than 5 mm ($^3/_{16}$ in.). In addition to other expected design loads, consider a 112 kg (250 lb) person standing in the center of the installed/closed cover. The designer shall consider wind in the design of hinged openings and how removed covers will be handled without damage (adequate rigidity).

5.8.6.3 Rectangular openings, other than shown in Figure 5.17 and Figure 5.18, and openings larger than indicated shall be designed by an engineer experienced in tank design in accordance with this standard. Hinged covers prescribed in Figure 5.18 may not be used on roofs designed to contain internal pressure. Flanged covers prescribed in Figure 5.17 may not be used on tanks with internal pressures (acting across the cross sectional area of the tank roof) that exceed the weight of the roof plates. This section applies only to fixed steel roofs.

Table 5.14b—Dimensions for Flanged Roof Nozzles (USC)

Dimensions in inches

Column 1	Column 2	Column 3	Column 4	Column 5
Nozzle NPS	**Outside Diameter of Pipe Neck**	**Diameter of Hole in Roof Plate or Reinforcing Plate D_P**	**Minimum Height of Nozzle H_R**	**Outside Diameter of Reinforcing Plate[a] D_R**
1 1/2	1.900	2	6	5
2	2 3/8	2 1/2	6	7
3	3 1/2	3 5/8	6	9
4	4 1/2	4 5/8	6	11
6	6 5/8	6 3/4	6	15
8	8 5/8	8 7/8	6	18
10	10 3/4	11	8	22
12	12 3/4	13	8	24

[a] Reinforcing plates are not required on nozzles NPS 6 or smaller but may be used if desired.

NOTE See Figure 5.19.

Table 5.15a—Dimensions for Threaded Roof Nozzles (SI)

Dimensions in millimeters

Column 1	Column 2	Column 3	Column 4
Nozzle NPS	**Coupling NPS**	**Diameter of Hole in Roof Plate or Reinforcing Plate D_P**	**Outside Diameter of Reinforcing Plate[a] D_R**
3/4	3/4	36	100
1	1	44	110
1 1/2	1 1/2	60	125
2	2	76	175
3	3	105	225
4	4	135	275
6	6	192	375
8	8	250	450
10	10	305	550
12	12	360	600

[a] Reinforcing plates are not required on nozzles NPS 6 or smaller but may be used if desired.

NOTE See Figure 5.20.

Table 5.15b—Dimensions for Threaded Roof Nozzles (USC)

Dimensions in inches

Column 1	Column 2	Column 3	Column 4
Nozzle NPS	**Coupling NPS**	**Diameter of Hole in Roof Plate or Reinforcing Plate D_P**	**Outside Diameter of Reinforcing Plate[a] D_R**
3/4	3/4	1 7/16	4
1	1	1 23/32	4 1/2
1 1/2	1 1/2	2 11/32	5
2	2	3	7
3	3	4 1/8	9
4	4	5 11/32	11
6	6	7 17/32	15
8	8	9 7/8	18
10	10	12	22
12	12	14 1/4	24

[a] Reinforcing plates are not required on nozzles NPS 6 or smaller but may be used if desired.

NOTE See Figure 5.20.

5.8.7 Water Drawoff Sumps

Water drawoff sumps shall be as specified in Figure 5.21 and Table 5.16a and Table 5.16b unless otherwise specified by the Purchaser.

5.8.8 Scaffold-Cable Support

The scaffold-cable support shall conform to Figure 5.22. Where seams or other attachments are located at the center of the tank roof, the scaffold support shall be located as close as possible to the center.

5.8.9 Threaded Connections

Threaded piping connections shall be female and tapered. The threads shall conform to the requirements of ASME B1.20.1 for tapered pipe threads.

5.8.10 Platforms, Walkways, and Stairways

a) Platforms, walkways, and stairways shall be in accordance with Table 5.17, Table 5.18, Table 5.19a, and Table 5.19b, and OSHA 29 *CFR* 1910, Subpart D, or equivalent national safety standard and the requirements herein, except as noted herein.

b) For examples of acceptable details, see Process Industry Practices standard details PIP STF05501, PIP STF05520, and PIP STF05521 (see www.pip.org).

c) Unless declined on the Data Sheet, Line 24, a roof edge landing or gauger's platform shall be provided at the top of all tanks.

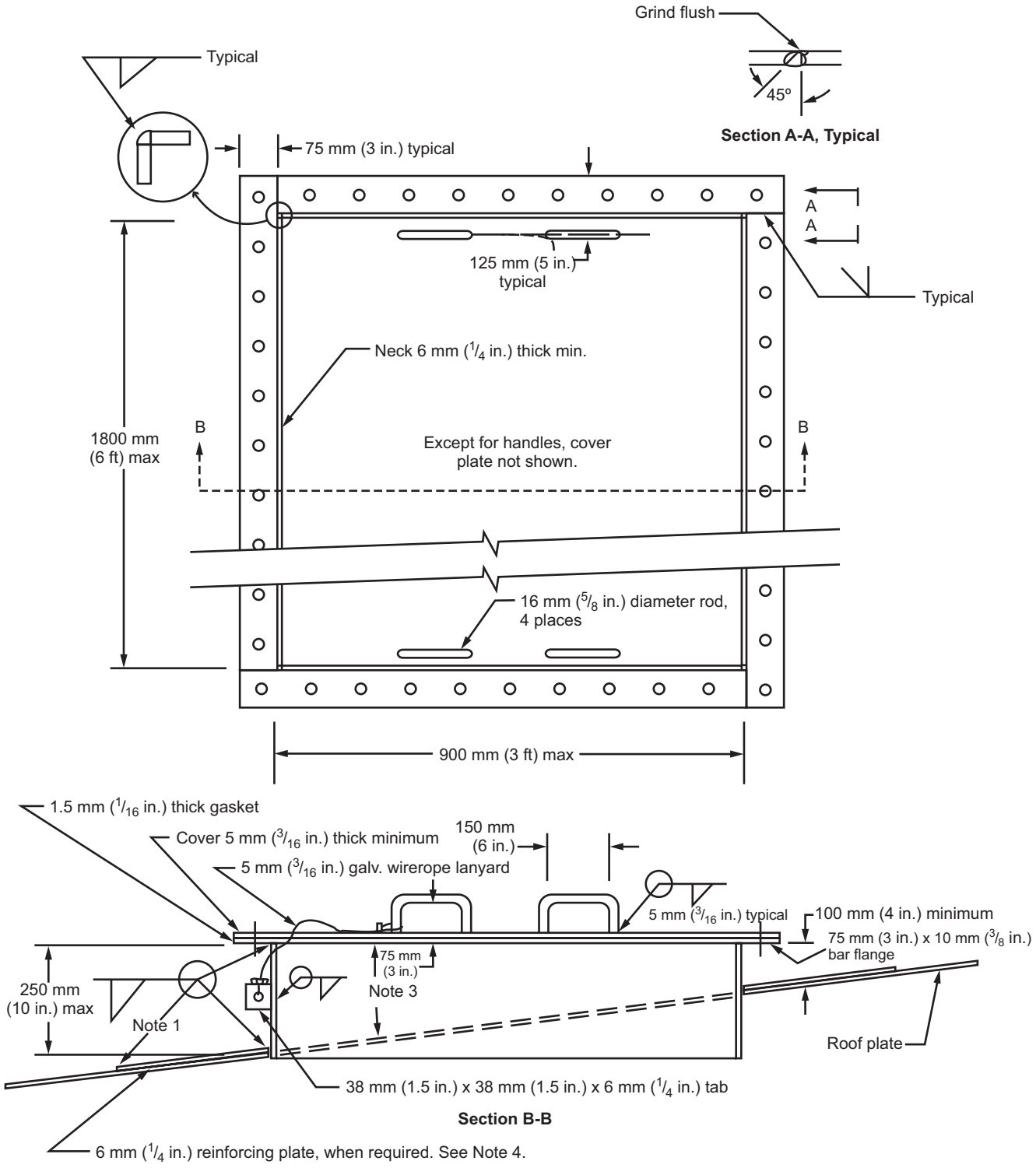

Figure 5.17—Rectangular Roof Openings with Flanged Covers

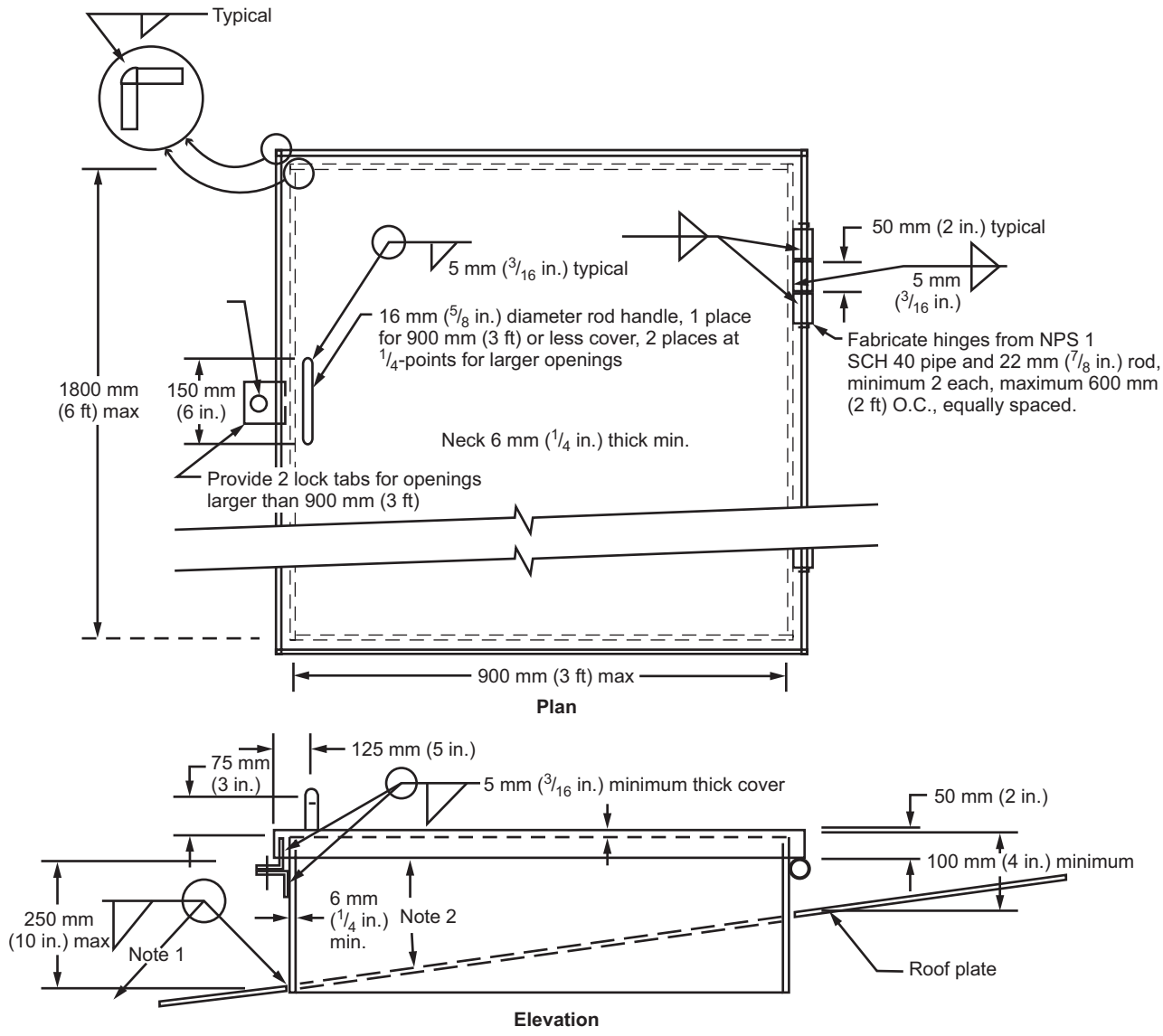

Figure 5.18—Rectangular Roof Openings with Hinged Cover

5.8.11 Other Appurtenances and Attachments

5.8.11.1 Floating suction lines shall be provided when specified on the Data Sheet, Table 4. Floating suction lines using rigid articulated (having one or more swing joints) pipe shall be designed to travel in a vertical plane and prevent damage to the floating roof and the suction line through its design range of travel. These lines shall be designed so that the vertical plane is as close as possible to, and in no case greater than 10 degrees off, a radial line from the tank centerline to the nozzle. Adjustments shall be made to clear internal structures.

5.8.11.2 Inlet diffusers shall be provided when specified by the Purchaser or the floating roof manufacturer. Traditional diffuser sizing to limit exit velocity to 3 ft/sec provides protection for tank internal components and reduces static electricity build up due to splashing and misting however does not limit static electricity build up in tanks due to higher velocity product flow in external inlet and outlet piping. See API 2003. Requirements shall be included in the Data Sheet (Table 4 or Table 5).

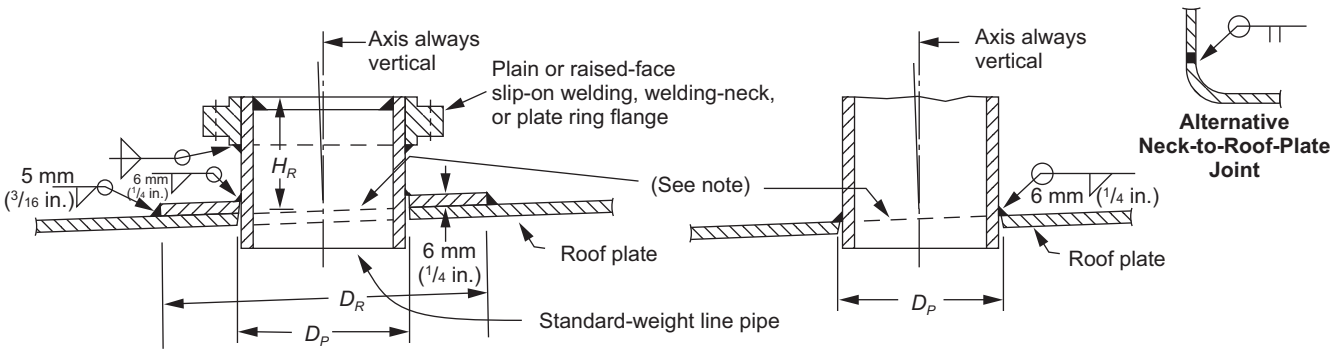

Figure 5.19—Flanged Roof Nozzles (see Table 5.14a and Table 5.14b)

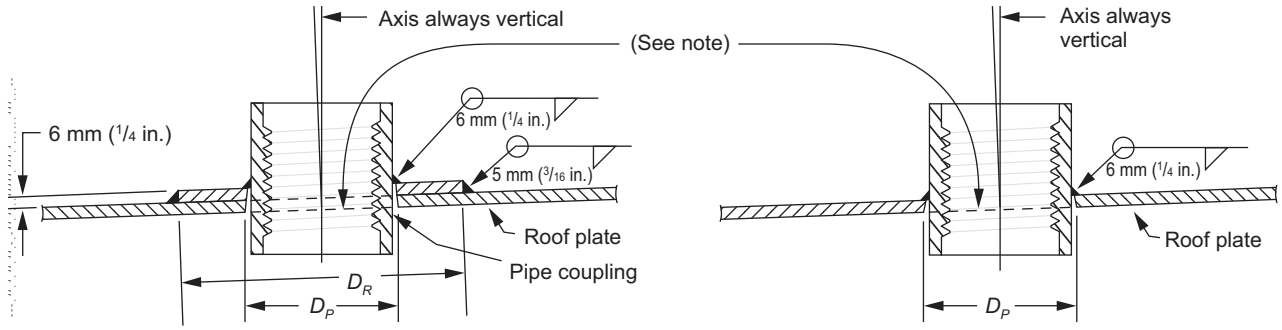

Figure 5.20—Threaded Roof Nozzles (see Table 5.15a and Table 5.15b)

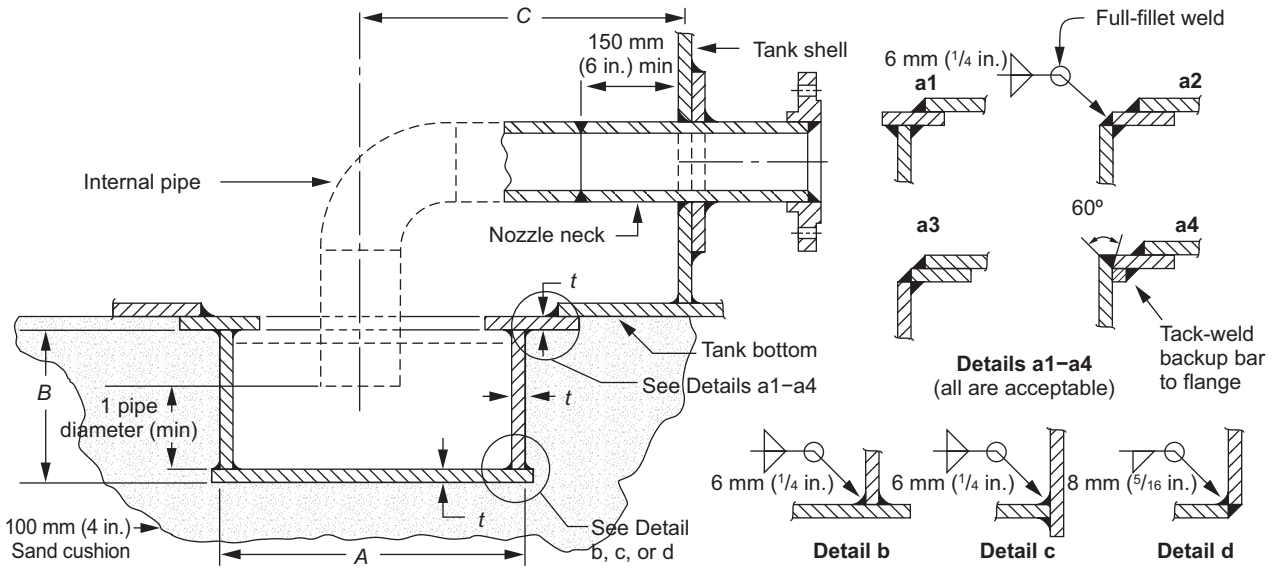

NOTE The erection procedure shall be performed by one of the following methods or by an alternate design approved by a Storage Tank Engineer:

a) For sumps being placed in the foundation before bottom placement, the sump shall be placed in position with at least 100 mm (4 in.) of thoroughly compacted sand, or other suitable fill material, around the sump. The sump then shall be welded to the bottom.

b) For sumps being placed in the foundation after bottom placement, sufficient bottom plate shall be removed to allow for the sump to be placed in position with at least 100 mm (4 in.) of thoroughly compacted sand, or other suitable fill material, around the sump. The sump shall then be welded to the bottom.

Figure 5.21—Drawoff Sump (see Table 5.16a and Table 5.16b)

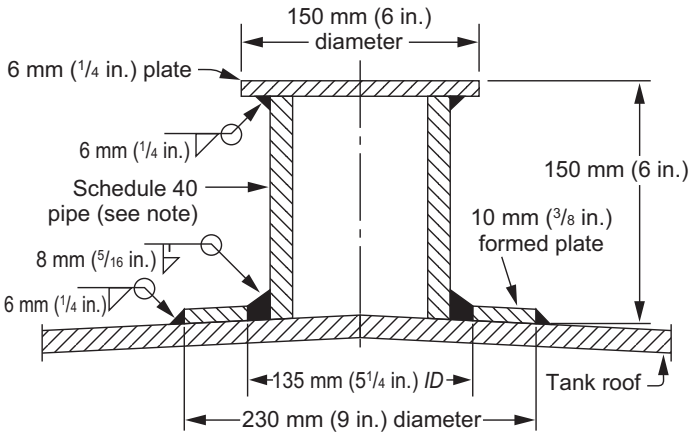

Figure 5.22—Scaffold Cable Support

Table 5.16a—Dimensions for Drawoff Sumps (SI)

NPS	Diameter of Sump mm *A*	Depth of Sump mm *B*	Distance from Center Pipe to Shell m *C*	Thickness of Plates in Sump mm *t*	Minimum Internal Pipe Thickness mm	Minimum Nozzle Neck Thickness mm
2	610	300	1.1	8	5.54	5.54
3	910	450	1.5	10	6.35	7.62
4	1220	600	2.1	10	6.35	8.56
6	1520	900	2.6	11	6.35	10.97

NOTE See Figure 5.19.

Table 5.16b—Dimensions for Drawoff Sumps (USC)

NPS	Diameter of Sump in. *A*	Depth of Sump in. *B*	Distance from Center Pipe to Shell ft *C*	Thickness of Plates in Sump in. *t*	Minimum Internal Pipe Thickness in.	Minimum Nozzle Neck Thickness in.
2	610 (24)	12	3 1/2	5/16	0.218	0.218
3	910 (36)	18	5	3/8	0.250	0.300
4	1220 (48)	24	6 3/4	3/8	0.250	0.337
6	1520 (60)	36	8 1/2	7/16	0.250	0.432

NOTE See Figure 5.19.

5.8.11.3 If required by the Purchaser, grounding lugs shall be provided in the quantity specified on the Data Sheet, Table 4, and comply with Figure 5.23. The lugs shall be equally spaced around the base of the tank. Provide a minimum of four lugs. The suggested maximum lug spacing is 30 m (100 ft).

NOTE Tanks that rest directly on a foundation of soil, asphalt or concrete are inherently grounded for purposes of dissipation of electrostatic charges. The addition of grounding rods or similar devices will not reduce the hazard associated with electrostatic charges in the stored product. API Recommended Practice 2003 contains additional information about tank grounding issues as well as comments about lightning protection.

5.8.11.4 All non-circular miscellaneous pads shall have rounded corners with a minimum radius of 50 mm (2 in.). Pads that must cover shell seams shall be provided with a 6 mm (1/4 in.) telltale hole (see 5.7.3.4).

Table 5.17—Requirements for Platforms and Walkways

1.	All parts shall be made of metal.
2.	The minimum width of the walkway shall be 610 mm (24 in.), after making adjustments at all projections.
3.	Flooring shall be made of grating or nonslip material.
4.	The height of the top railing above the floor shall be 1070 mm (42 in.).[a]
5.	The minimum height of the toeboard shall be 75 mm (3 in.).
6.	The maximum space between the top of the floor and the bottom of the toeboard shall be 6 mm ($^1/_4$ in.).
7.	The height of the midrail shall be approximately one-half the distance from the top of the walkway to the top of the railing.
8.	The maximum distance between railing posts shall be 2400 mm (96 in.).
9.	The completed structure shall be capable of supporting a moving concentrated load of 4450 N (1000 lbf), and the handrail structure shall be capable of withstanding a load of 900 N (200 lbf) applied in any direction at any point on the top rail.
10.	Handrails shall be on both sides of the platform but shall be discontinued where necessary for access.
11.	At handrail openings, any space wider than 150 mm (6 in.) between the tank and the platform should be floored.
12.	A tank runway that extends from one part of a tank to any part of an adjacent tank, to the ground, or to another structure shall be supported so that free relative movement of the structures joined by the runway is permitted. This may be accomplished by firm attachment of the runway to one tank and the use of a slip joint at the point of contact between the runway and the other tank. (This method permits either tank to settle or be disrupted by an explosion without the other tank being endangered.

[a] This handrail height is required by OSHA specifications.

Table 5.18—Requirements for Stairways

1.	All parts shall be made of metal.
2.	The minimum width of the stairs shall be 710 mm (28 in.).
3.	The maximum angle[a] of the stairway with a horizontal line shall be 50 degrees.
4.	The minimum width of the stair treads shall be 200 mm (8 in.). (The sum of twice the rise of the stair treads plus the run [defined as the horizontal distance between the noses of successive tread pieces] shall not be less than 610 mm [24 in.] or more than 660 mm [26 in.]. Rises shall be uniform throughout the height of the stairway.])
5.	Treads shall be made of grating or nonslip material.
6.	The top railing shall join the platform handrail without offset, and the height measured vertically from tread level at the nose of the tread shall be 760 mm to 860 mm (30 in. to 34 in.).
7.	The maximum distance between railing posts, measured along the slope of the railing, shall be 2400 mm (96 in.).
8.	The completed structure shall be capable of supporting a moving concentrated load of 4450 N (1000 lbf), and the handrail structure shall be capable of withstanding a load of 900 N (200 lbf) applied in any direction at any point on the top rail.
9.	Handrails shall be on both sides of straight stairs; handrails shall also be on both sides of circular stairs when the clearance between the tank shell and the stair stringer exceeds 200 mm (8 in.).
10.	Circumferential stairways shall be completely supported on the shell of the tank, and the ends of the stringers shall be clear of the ground. Stairways shall extend from the bottom of the tank up to a roof edge landing or gauger's platform.

[a] It is recommended that the same angle be employed for all stairways in a tank group or plant area.

Table 5.19a—Rise, Run, and Angle Relationships for Stairways (SI)

Height of Rise mm R	$2R + r$ = 610 mm			$2R + r$ = 660 mm		
	Width of Run mm r	Angle		Width of Run mm r	Angle	
		Degrees	Minutes		Degrees	Minutes
135	340	21	39	—	—	—
140	330	22	59	380	20	13
145	320	24	23	370	21	24
150	310	25	49	360	22	37
155	300	27	19	350	23	53
165	280	30	31	330	26	34
170	270	32	12	320	27	59
180	250	35	45	300	30	58
185	240	37	38	290	32	32
190	230	39	34	280	34	10
195	220	41	33	270	35	50
205	200	45	42	250	39	21
210	190	47	52	240	41	11
215	—	—	—	230	43	4
220	—	—	—	220	45	0
225	—	—	—	210	46	58

Table 5.19b—Rise, Run, and Angle Relationships for Stairways (USC)

Height of Rise in. R	$2R + r$ = 24 in.			$2R + r$ = 26 in.		
	Width of Run in. r	Angle		Width of Run in. r	Angle	
		Degrees	Minutes		Degrees	Minutes
5 1/2	13 1/2	21	39	—	—	—
5 1/2	13	22	59	15	20	13
5 3/4	12 1/2	24	23	14 1/2	21	24
6	12	25	49	14	22	37
6 1/4	11 1/2	27	19	13 1/2	23	53
6 1/2	11	30	31	13	26	34
6 3/4	10 1/2	32	12	12 1/2	27	59
7	10	35	45	12	30	58
7 1/4	9 1/2	37	38	11 1/2	32	32
7 1/2	9	39	34	11	34	10
7 3/4	8 1/2	41	33	10 1/2	35	50
8	8	45	42	10	39	21
8 1/4	7 1/2	47	52	9 1/2	41	11
8 1/2	—	—	—	9	43	4
8 3/4	—	—	—	8 1/2	45	0
9	—	—	—	8	46	58

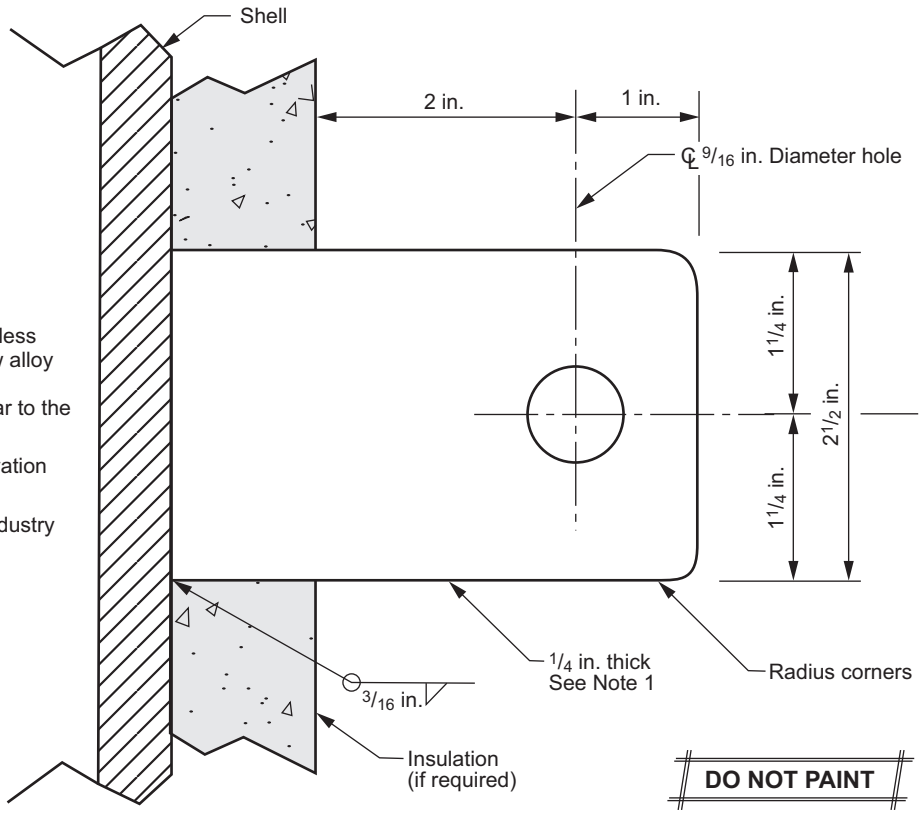

Notes:
1. Lug material shall be austenitic stainless steel when attached to carbon or low alloy steel parts. When attached to other materials, lug material shall be similar to the material to which attached.
2. See tank drawing/data sheet for elevation and orientation.
3. Drawing courtesy of PIP (Process Industry Practices).

Figure 5.23—Grounding Lug

5.9 Top and Intermediate Stiffening Rings

5.9.1 General

An open-top tank shall be provided with stiffening rings to maintain roundness when the tank is subjected to wind loads. The stiffening rings shall be located at or near the top of the top course, preferably on the outside of the tank shell. This design for rings used as wind girders also applies to floating-roof tanks covered in Annex C. The top angle and the wind girders shall conform, in material and size, to the requirements of this standard.

5.9.2 Types of Stiffening Rings

Stiffening rings may be made of structural sections, formed plate sections, sections built up by welding, or combinations of such types of sections assembled by welding. The outer periphery of stiffening rings may be circular or polygonal (see Figure 5.24).

5.9.3 Restrictions on Stiffening Rings

5.9.3.1 The minimum size of angle for use alone or as a component in a built-up stiffening ring shall be $65 \times 65 \times 6$ mm ($2^1/2 \times 2^1/2 \times 1/4$ in.). The minimum nominal thickness of plate for use in formed or built-up stiffening rings shall be 6 mm (0.236 in.).

5.9.3.2 When the stiffening rings are located more than 0.6 m (2 ft) below the top of the shell, the tank shall be provided with a $65 \times 65 \times 6$ mm ($2^1/2 \times 2^1/2 \times 3/16$ in.) top curb angle for shells 5 mm ($3/16$ in.) thick, with a $75 \times 75 \times 6$

mm ($3 \times 3 \times 1/4$ in.) angle for shells more than 5 mm ($3/16$ in.) thick, or with other members of equivalent section modulus.

• **5.9.3.3** Rings that may trap liquid shall be provided with adequate drain holes. Uninsulated tanks having rings shall have small water-shedding slopes and/or drain holes or slots unless the Purchaser approves an alternate means of drainage. If drain holes are provided, they shall be at least 25 mm (1 in.) diameter (or slot width) on 2400 mm (8 ft) centers or less. Insulated tanks where the rings function as insulation closures shall have no drain holes or slots.

5.9.3.4 Welds joining stiffening rings to the tank shell may cross vertical tank seam welds. Any splice weld in the ring shall be located a minimum of 150 mm (6 in.) from any vertical shell weld. Stiffening rings may also cross vertical tank seam welds with the use of coping (rat hole) of the stiffening ring at the vertical tank seam. Where the coping method is used, the required section modulus of the stiffening ring and weld spacing must be maintained.

5.9.4 Stiffening Rings as Walkways

A stiffening ring or any portion of it that is specified as a walkway shall have a width not less than 710 mm (28 in.) clear of projections including the angle on the top of the tank shell. The clearance around local projections shall not be less than 610 mm (24 in.). Unless the tank is covered with a fixed roof, the stiffening ring (used as a walkway) shall be located 1100 mm (42 in.) below the top of the curb angle and shall be provided with a standard railing on the unprotected side and at the ends of the section used as a walkway.

5.9.5 Supports for Stiffening Rings

Supports shall be provided for all stiffening rings when the dimension of the horizontal leg or web exceeds 16 times the leg or web thickness. The supports shall be spaced at the intervals required for the dead load and vertical live load; however, the spacing shall not exceed 24 times the width of the outside compression flange.

5.9.6 Top Wind Girder

5.9.6.1 The required minimum section modulus of the stiffening ring shall be determined by the following equation:

In SI units:

$$Z = \frac{D^2 H_2}{17}\left(\frac{V}{190}\right)^2$$

where

Z is the required minimum section modulus, in cm^3;

D is the nominal tank diameter, in meters;

H_2 is the height of the tank shell, in meters, including any freeboard provided above the maximum filling height as a guide for a floating roof;

V is the design wind speed (3-sec gust), in km/h (see 5.2.1[k]).

In USC units:

$$Z = 0.0001\, D^2\, H_2\left(\frac{V}{120}\right)^2$$

where

Z is the required minimum section modulus, in inches^3;

D is the nominal tank diameter, in feet;

H_2 is the height of the tank shell, in feet, including any freeboard provided above the maximum filling height as a guide for a floating roof;

V is the design wind speed (3-sec gust), in mph (see 5.2.1[k]).

• NOTE For tank diameters over 60 m (200 ft), the section modulus required by the equation may be reduced by agreement between the Purchaser and the Manufacturer, but the modulus may not be less than that required for a tank diameter of 61 m (200 ft). (A description of the loads on the tank shell that are included in the design wind speed can be found in Item a of the note to 5.9.7.1.)

5.9.6.2 The section modulus of the stiffening ring shall be based on the properties of the applied members and may include a portion of the tank shell for a distance of 16*t* below and, if applicable, above the shell-ring attachment where *t* is the as-built shell thickness, unless otherwise specified. When curb angles are attached to the top edge of the shell ring by butt-welding, this distance shall be reduced by the width of the vertical leg of the angle (see Figure 5.24 and Table 5.20a and Table 5.20b).

5.9.6.3 When a stair opening is installed through a stiffening ring, the section modulus of the portion of the ring outside the opening, including the transition section, shall conform to the requirements of 5.9.6.1. The shell adjacent to the opening shall be stiffened with an angle or a bar, the wide side of which is placed in a horizontal plane. The other sides of the opening shall also be stiffened with an angle or a bar, the wide side of which is placed in a vertical plane. The cross-sectional area of these rim stiffeners shall be greater than or equal to the cross-sectional area of the portion of shell included in the section-modulus calculations for the stiffening ring. These rim stiffeners or additional members shall provide a suitable toe board around the opening.

The stiffening members shall extend beyond the end of the opening for a distance greater than or equal to the minimum depth of the regular ring sections. The end stiffening members shall frame into the side stiffening members, and the end and side stiffening members shall be connected to ensure that their full strength is developed. Figure 5.25 shows the opening described in this section. Alternative details that provide a load-carrying capacity equal to that of the girder cross-section away from the opening may be provided.

5.9.7 Intermediate Wind Girders

5.9.7.1 The maximum height of the unstiffened shell shall be calculated as follows:

In SI units:

$$H_1 = 9.47t\sqrt{\left(\frac{t}{D}\right)^3}\left(\frac{190}{V}\right)^2$$

where

H_1 is the vertical distance, in meters, between the intermediate wind girder and the top angle of the shell or the top wind girder of an open-top tank;

• t is the nominal thickness, unless otherwise specified, of the thinnest shell course, in millimeters (see Note 1);

D is the nominal tank diameter, in meters;

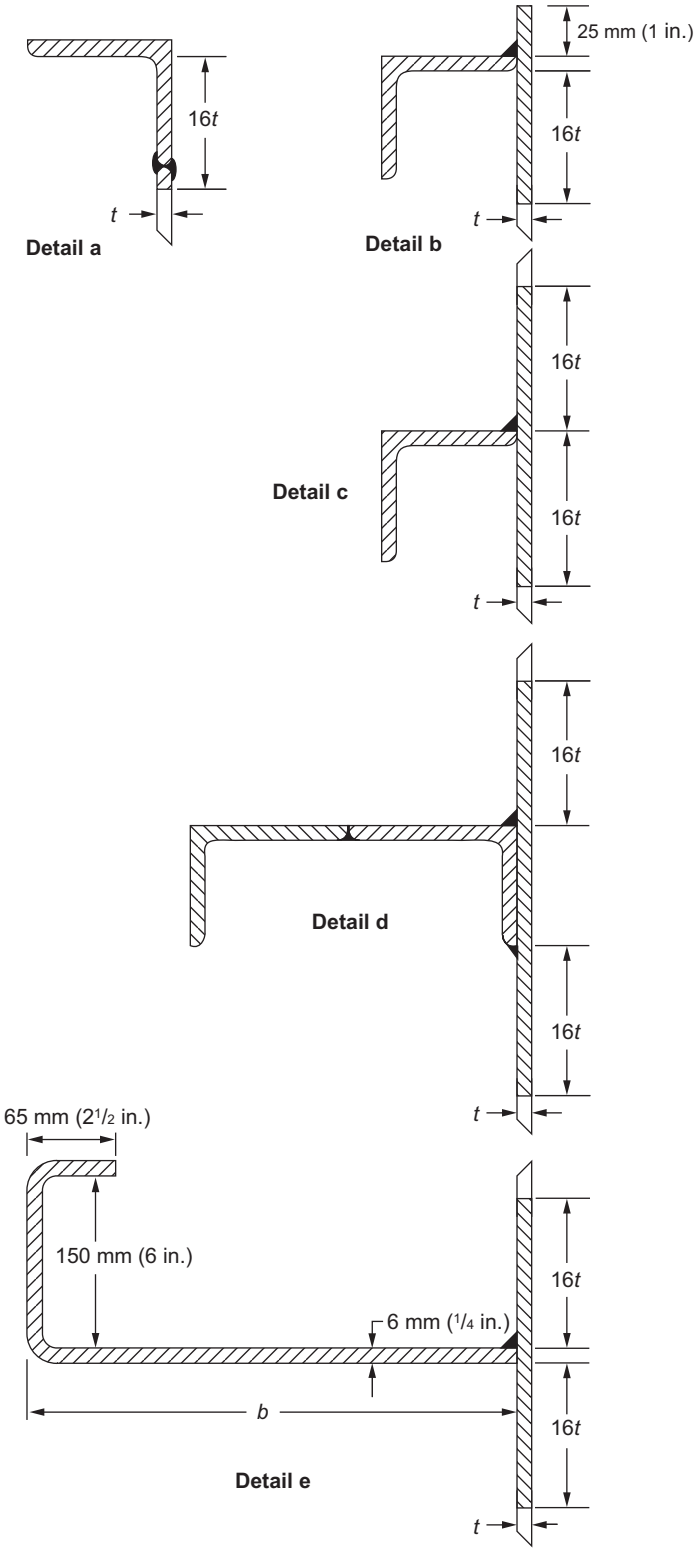

Figure 5.24—Typical Stiffening-ring Sections for Tank Shells (see Table 5.20a and Table 5.20b)

Table 5.20a—Section Moduli (cm^3) of Stiffening-Ring Sections on Tank Shells (SI)

Dimensions in millimeters

Column 1	Column 2	Column 3	Column 4	Column 5	Column 6
Member Size	As-Built Shell Thickness				
	5	6	8	10	11
Top Angle: Figure 5.24, Detail a					
65 × 65 × 6	6.58	6.77	—	—	—
65 × 65 × 8	8.46	8.63	—	—	—
75 × 75 × 10	13.82	13.97	—	—	—
Curb Angle: Figure 5.24, Detail b					
65 × 65 × 6	27.03	28.16	—	—	—
65 × 65 × 8	33.05	34.67	—	—	—
75 × 75 × 6	35.98	37.49	—	—	—
75 × 75 × 10	47.24	53.84	—	—	—
100 × 100 × 7	63.80	74.68	—	—	—
100 × 100 × 10	71.09	87.69	—	—	—
One Angle: Figure 5.24, Detail c (See Note)					
65 × 65 × 6	28.09	29.15	30.73	32.04	32.69
65 × 65 × 8	34.63	36.20	38.51	40.32	41.17
100 × 75 × 7	60.59	63.21	66.88	69.48	70.59
102 × 75 × 8	66.97	70.08	74.49	77.60	78.90
125 × 75 × 8	89.41	93.71	99.86	104.08	105.78
125 × 75 × 10	105.20	110.77	118.97	124.68	126.97
150 × 75 × 10	134.14	141.38	152.24	159.79	162.78
150 × 100 × 10	155.91	171.17	184.11	193.08	196.62
Two Angles: Figure 5.24, Detail d (See Note)					
100 × 75 × 8	181.22	186.49	195.15	201.83	204.62
100 × 75 × 10	216.81	223.37	234.55	243.41	247.16
125 × 75 × 8	249.17	256.84	269.59	279.39	283.45
125 × 75 × 10	298.77	308.17	324.40	337.32	342.77
150 × 75 × 8	324.97	335.45	353.12	366.82	372.48
150 × 75 × 10	390.24	402.92	425.14	443.06	450.61
150 × 100 × 10	461.11	473.57	495.62	513.69	521.41
Formed Plate: Figure 5.24, Detail e					
b = 250	—	341	375	392	399
b = 300	—	427	473	496	505
b = 350	—	519	577	606	618
b = 400	—	615	687	723	737
b = 450	—	717	802	846	864
b = 500	—	824	923	976	996
b = 550	—	937	1049	1111	1135
b = 600	—	1054	1181	1252	1280
b = 650	—	1176	1317	1399	1432
b = 700	—	1304	1459	1551	1589
b = 750	—	1436	1607	1709	1752
b = 800	—	1573	1759	1873	1921
b = 850	—	1716	1917	2043	2096
b = 900	—	1864	2080	2218	2276
b = 950	—	2016	2248	2398	2463
b = 1000	—	2174	2421	2584	2654

NOTE The section moduli for Details c and d are based on the longer leg being located horizontally (perpendicular to the shell) when angles with uneven legs are used.

Table 5.20b—Section Moduli (in.^{3}) of Stiffening-Ring Sections on Tank Shells (USC)

Dimensions in inches

Column 1	Column 2	Column 3	Column 4	Column 5	Column 6
Member Size	As-Built Shell Thickness				
	3/16	1/4	5/16	3/8	7/8
Top Angle: Figure 5.24, Detail a					
$2\frac{1}{2} \times 2\frac{1}{2} \times \frac{1}{4}$	0.41	0.42	—	—	—
$2\frac{1}{2} \times 2\frac{1}{2} \times \frac{5}{16}$	0.51	0.52	—	—	—
$3 \times 3 \times \frac{3}{8}$	0.89	0.91	—	—	—
Curb Angle: Figure 5.24, Detail b					
$2\frac{1}{2} \times 2\frac{1}{2} \times \frac{1}{4}$	1.61	1.72	—	—	—
$2\frac{1}{2} \times 2\frac{1}{2} \times \frac{5}{16}$	1.89	2.04	—	—	—
$3 \times 3 \times \frac{1}{4}$	2.32	2.48	—	—	—
$3 \times 3 \times \frac{3}{8}$	2.78	3.35	—	—	—
$4 \times 4 \times \frac{1}{4}$	3.64	4.41	—	—	—
$4 \times 4 \times \frac{3}{8}$	4.17	5.82	—	—	—
One Angle: Figure 5.24, Detail c (See Note)					
$2\frac{1}{2} \times 2\frac{1}{2} \times \frac{1}{4}$	1.68	1.79	1.87	1.93	2.00
$2\frac{1}{2} \times 2\frac{1}{2} \times \frac{5}{16}$	1.98	2.13	2.23	2.32	2.40
$4 \times 3 \times \frac{1}{4}$	3.50	3.73	3.89	4.00	4.10
$4 \times 3 \times \frac{5}{16}$	4.14	4.45	4.66	4.82	4.95
$5 \times 3 \times \frac{5}{16}$	5.53	5.96	6.25	6.47	6.64
$5 \times 3\frac{1}{2} \times \frac{5}{16}$	6.13	6.60	6.92	7.16	7.35
$5 \times 3\frac{1}{2} \times \frac{3}{8}$	7.02	7.61	8.03	8.33	8.58
$6 \times 4 \times \frac{3}{8}$	9.02	10.56	11.15	11.59	11.93
Two Angles: Figure 5.24, Detail d (See Note)					
$4 \times 3 \times \frac{5}{16}$	11.27	11.78	12.20	12.53	12.81
$4 \times 3 \times \frac{3}{8}$	13.06	13.67	14.18	14.60	14.95
$5 \times 3 \times \frac{5}{16}$	15.48	16.23	16.84	17.34	17.74
$5 \times 3 \times \frac{3}{8}$	18.00	18.89	19.64	20.26	20.77
$5 \times 3\frac{1}{2} \times \frac{5}{16}$	16.95	17.70	18.31	18.82	19.23
$5 \times 3\frac{1}{2} \times \frac{3}{8}$	19.75	20.63	21.39	22.01	22.54
$6 \times 4 \times \frac{3}{8}$	27.74	28.92	29.95	30.82	31.55
Formed Plate: Figure 5.24, Detail e					
$b = 10$	—	23.29	24.63	25.61	26.34
$b = 12$	—	29.27	31.07	32.36	33.33
$b = 14$	—	35.49	37.88	39.53	40.78
$b = 16$	—	42.06	45.07	47.10	48.67
$b = 18$	—	48.97	52.62	55.07	56.99
$b = 20$	—	56.21	60.52	63.43	65.73
$b = 22$	—	63.80	68.78	72.18	74.89
$b = 24$	—	71.72	77.39	81.30	84.45
$b = 26$	—	79.99	86.35	90.79	94.41
$b = 28$	—	88.58	95.66	100.65	104.77
$b = 30$	—	97.52	105.31	110.88	115.52
$b = 32$	—	106.78	115.30	121.47	126.66
$b = 34$	—	116.39	125.64	132.42	138.17
$b = 36$	—	126.33	136.32	143.73	150.07
$b = 38$	—	136.60	147.35	155.40	162.34
$b = 40$	—	147.21	158.71	167.42	174.99

NOTE The section moduli for Details c and d are based on the longer leg being located horizontally (perpendicular to the shell) when angles with uneven legs are used.

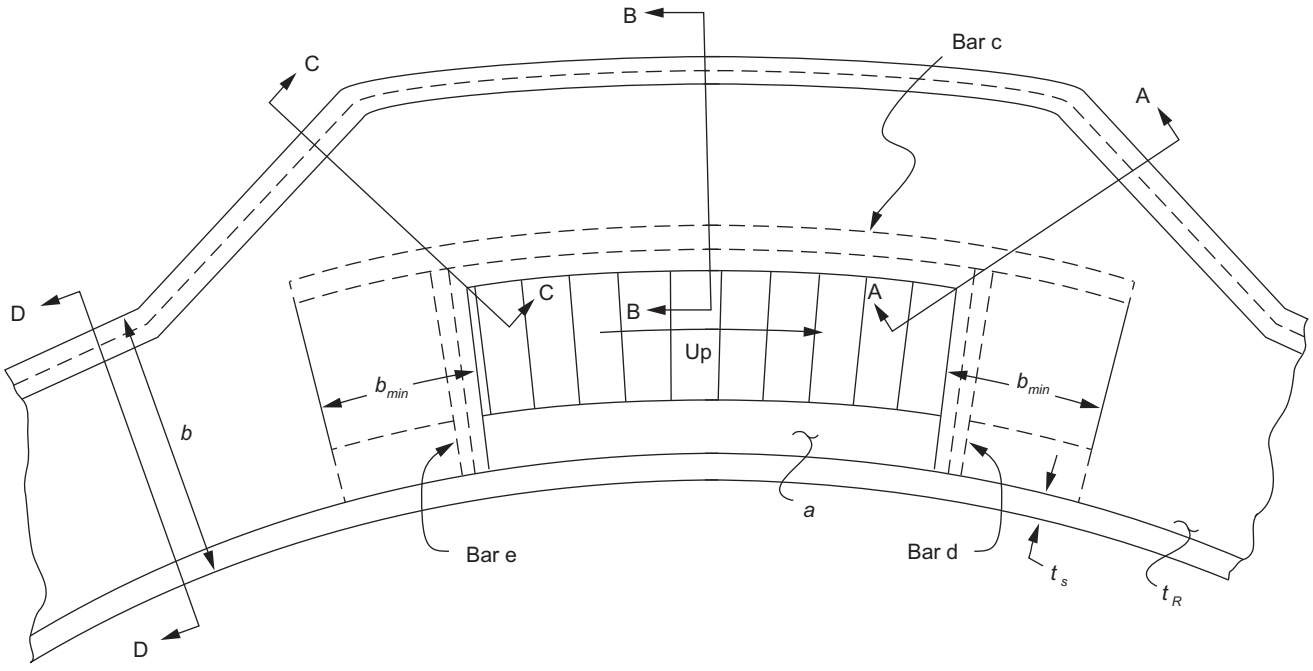

Figure 5.25—Stairway Opening through Stiffening Ring

V is the design wind speed (3-sec gust), in km/h (see 5.2.1[k]).

In USC units:

$$H_1 = 600{,}000\ t\sqrt{\left(\frac{t}{D}\right)^3}\left(\frac{120}{V}\right)^2$$

where

H_1 is the vertical distance, in feet, between the intermediate wind girder and the top angle of the shell or the top wind girder of an open-top tank;

- t is the nominal thickness, unless otherwise specified, of the thinnest shell course, in inches (see Note 1);

D is the nominal tank diameter, in feet;

V is the design wind speed (3-sec gust), in mph (see 5.2.1[k]).

NOTE 1 The structural stability check of wind girder stiffened shells in accordance with 5.9.6 and 5.9.7, shall be based upon nominal dimensions of the shell course and the wind girders irrespective of specified corrosion allowances whenever the “No” option is selected for “Check Buckling in Corroded Cond.?” on the Data Sheet, Line 9. Whenever the “Yes” option is selected, the check must be based upon the nominal dimensions minus the specified corrosion allowance.

NOTE 2 This formula is intended to cover tanks with either open tops or closed tops and is based on the following factors (for the background for the factors given in this note, see ASCE 7 and R. V. McGrath's "Stability of API Standard 650 Tank Shells"): [21]

a) The velocity pressure is:

$$p = 0.00256 K_z K_{zt} K_d V^2 I G = 1.48 \text{ kPa } (31 \text{ lbf/ft}^2)$$

where

K_z equals the velocity pressure exposure coefficient = 1.04 for exposure C at a height of 40 ft;

K_{zt} is 1.0 for all structures except those on isolated hills or escarpments;

K_d is the directionality factor = 0.95 for round tanks;

V equals 3-second gust design wind speed = 190 km/h (120 mph) at 10 m (33 ft) above ground (see 5.2.1[k]);

I equals the importance factor = 1.0 for Category II structures;

G equals the gust factor = 0.85 for exposure C.

A 0.24 kPa (5 lbf/ft^2) internal vacuum is added for inward drag on open-top tanks or for external pressure on closed top tanks for a total of 1.72 kPa (36 lbf/ft^2).

b) The wind pressure is uniform over the theoretical buckling mode of the tank shell, which eliminates the need for a shape factor for the wind loading.

c) The modified U.S. Model Basin formula for the critical uniform external pressure on thin-wall tubes free from end loadings, subject to the total pressure specified in Item a.

• d) When other factors are specified by the Purchaser that are greater than the factors in Items a, b, and c, the total load on the shell shall be modified accordingly, and H_1 shall be decreased by the ratio of 1.72 kPa (36 lbf/ft^2) to the modified total pressure.

5.9.7.2 After the maximum height of the unstiffened shell, H_1, has been determined, the height of the transformed shell shall be calculated as follows:

a) With the following equation, change the actual width of each shell course into a transposed width of each shell course having the top shell thickness:

$$W_{tr} = W \sqrt{\left(\frac{t_{\text{uniform}}}{t_{\text{actual}}}\right)^5}$$

where

W_{tr} is the transposed width of each shell course, in millimeters (inches);

W is the actual width of each shell course, in millimeters (inches);

• $t_{uniform}$ is the nominal thickness, unless otherwise specified, of the thinnest shell course, in millimeters (inches);

• t_{actual} is the nominal thickness, unless otherwise specified, of the shell course for which the transposed width is being calculated, in millimeters (inches).

b) Add the transposed widths of the courses. The sum of the transposed widths of the courses will give the height of the transformed shell.

[21] R.V. McGrath, "Stability of API Standard 650 Tank Shells," *Proceedings of the American Petroleum Institute, Section III—Refining,* American Petroleum Institute, New York, 1963, Vol. 43, pp. 458 – 469.

5.9.7.3 If the height of the transformed shell is greater than the maximum height H_1, an intermediate wind girder is required.

5.9.7.3.1 For equal stability above and below the intermediate wind girder, the girder should be located at the mid-height of the transformed shell. The location of the girder on the actual shell should be at the same course and same relative position as the location of the girder on the transformed shell, using the thickness relationship in 5.9.7.2.

5.9.7.3.2 Other locations for the girder may be used, provided the height of unstiffened shell on the transformed shell does not exceed H_1 (see 5.9.7.5).

5.9.7.4 If half the height of the transformed shell exceeds the maximum height H_1, a second intermediate girder shall be used to reduce the height of unstiffened shell to a height less than the maximum.

5.9.7.5 Intermediate wind girders shall not be attached to the shell within 150 mm (6 in.) of a horizontal joint of the shell. When the preliminary location of a girder is within 150 mm (6 in.) of a horizontal joint, the girder shall preferably be located 150 mm (6 in.) below the joint; however, the maximum unstiffened shell height shall not be exceeded.

5.9.7.6 The required minimum section modulus of an intermediate wind girder shall be determined by the following equation:

In SI units:

$$Z = \frac{D^2 H_1}{17}\left(\frac{V}{190}\right)^2$$

where

Z is the required minimum section modulus, in cm^3;

D is the nominal tank diameter, in meters;

H_1 is the vertical distance, in meters, between the intermediate wind girder and the top angle of the shell or the top wind girder of an open-top tank;

V is the design wind speed (3-sec gust), in km/h (see 5.2.1[k]).

In USC units:

$$Z = \frac{D^2 H_1}{10{,}000}\left(\frac{V}{120}\right)^2$$

where

Z is the required minimum section modulus, in inches^3;

D is the nominal tank diameter, in feet;

H_1 is the vertical distance, in feet, between the intermediate wind girder and the top angle of the shell or the top wind girder of an open-top tank;

V is the design wind speed (3-sec gust), in mph (see 5.2.1[k]).

NOTE A description of the loads on the tank shell that are included in the design wind speed can be found in Item a of the note to 5.9.7.1.

5.9.7.6.1 Where the use of a transformed shell permits the intermediate wind girder to be located at a height that is less than H_1 calculated by the formula in 5.9.7.1, the spacing to the mid-height of the transformed shell, transposed to the height of the actual shell, may be substituted for H_1 in the calculation for the minimum section modulus if the girder is attached at the transposed location.

5.9.7.6.2 The section modulus of the intermediate wind girder shall be based on the properties of the attached members and may include a portion of the tank shell for a distance above and below the attachment to the shell, in mm (in.), of:

In SI units:

$$13.4\,(Dt)^{0.5}$$

where

D is the nominal tank diameter, in meters;

t is the as-built shell thickness, unless otherwise specified, at the attachment, in millimeters.

In USC units:

$$1.47\,(Dt)^{0.5}$$

where

D is the nominal tank diameter, in feet;

t is the as-built shell thickness, unless otherwise specified, at the attachment, in inches.

• **5.9.7.7** An opening for a stairway in an intermediate stiffener is unnecessary when the intermediate stiffener extends no more than 150 mm (6 in.) from the outside of the shell and the nominal stairway width is at least 710 mm (28 in.). For greater outward extensions of a stiffener, the stairway shall be increased in width to provide a minimum clearance of 450 mm (18 in.) between the outside of the stiffener and the handrail of the stairway, subject to the Purchaser's approval. If an opening is necessary, it may be designed in a manner similar to that specified in 5.9.6.3 for a top wind girder with the exception that only a 560 mm (22 in.) width through the stiffener need be provided.

5.10 Roofs

5.10.1 Definitions

The following definitions apply to roof designs but shall not be considered as limiting the type of roof permitted by 5.10.2.8.

a) A **supported cone roof** is a roof formed to approximately the surface of a right cone that is supported principally either by rafters on girders and columns or by rafters on trusses with or without columns.

b) A **self-supporting cone roof** is a roof formed to approximately the surface of a right cone that is supported only at its periphery.

c) A **self-supporting dome roof** is a roof formed to approximately a spherical surface that is supported only at its periphery.

d) A **self-supporting umbrella roof** is a modified dome roof formed so that any horizontal section is a regular polygon with as many sides as there are roof plates that is supported only at its periphery.

5.10.2 General

5.10.2.1 ***Loads***: All roofs and supporting structures shall be designed for load combinations (a), (b), (c), (e), (f), and (g).

- **5.10.2.2** ***Roof Plate Thickness:*** Roof plates shall have a nominal thickness of not less than 5 mm ($^3/_{16}$ in.) or 7-gauge sheet. Increased thickness may be required for supported cone roofs (see 5.10.4.4). Any required corrosion allowance for the plates of self-supporting roofs shall be added to the calculated thickness unless otherwise specified by the Purchaser. Any corrosion allowance for the plates of supported roofs shall be added to the greater of the calculated thickness or the minimum thickness or [5 mm ($^3/_{16}$ in.) or 7-gauge sheet]. For frangible roof tanks, where a corrosion allowance is specified, the design must have frangible characteristics in the nominal (uncorroded) condition.

5.10.2.3 ***Structural Member Attachment:*** Roof plates of supported cone roofs shall not be attached to the supporting members unless otherwise approved by the Purchaser. Continuously attaching the roof to cone supporting members may be beneficial when interior lining systems are required, however, the tank roof cannot be considered frangible (see 5.10.2.6).

- **5.10.2.4** ***Structural Member Thickness:*** All internal and external structural members shall have a minimum nominal thickness (new) of 4.3 mm (0.17 in.), and a minimum corroded thickness of 2.4 mm (0.094 in.), respectively, in any component, except that the minimum nominal thickness shall not be less than 6 mm (0.236 in.) for columns which by design normally resist axial compressive forces.

5.10.2.5 ***Top Attachment:*** Roof plates shall be attached to the top angle of the tank with a continuous fillet weld on the top side.

- **5.10.2.6** ***Frangible Roof:*** A roof is considered frangible (see 5.8.5 for emergency venting requirement) if the roof-to-shell joint will fail prior to the shell-to-bottom joint in the event of excessive internal pressure. When a Purchaser specifies a tank with a frangible roof, the tank design shall comply with a, b, c, or d, of the following:

a) For tanks 15 m (50 ft) in diameter or greater, the tank shall meet all of the following.

1) The slope of the roof at the top angle attachment does not exceed 2:12.

2) The roof support members shall not be attached to the roof plate.

3) The roof is attached to the top angle with a single continuous fillet weld on the top side (only) that does not exceed 5 mm ($^3/_{16}$ in.). No underside welding of roof to top angle (including seal welding) is permitted.

4) The roof-to-top angle compression ring is limited to details a through e in Figure F-2.

5) All members in the region of the roof-to-shell joint, including insulation rings, are considered as contributing to the roof-to-shell joint cross-sectional area (A) and this area is less than the limit shown below:

$$A = \frac{DL_s}{2\,\pi\,F_y\,\tan\theta}$$

NOTE The terms for this equation are defined in Annex F.

The top angle size required by 5.1.5.9.e may be reduced in size if required to meet the cross sectional area limit.

b) For self-anchored tanks with a diameter greater than or equal to 9 m (30 ft) but less than 15 m (50 ft), the tank shall meet all of the following.

1) The tank height is 9 m (30 ft) or greater.

2) The tank shall meet the requirements of 5.10.2.6.a.2-5.

3) The slope of the roof at the top angle attachment does not exceed $^{3}/_{4}$:12.

4) Attachments (including nozzles and manholes) to the tank shall be designed to accommodate at least 100 mm (4 in.) of vertical shell movement without rupture.

5) The bottom is butt-welded.

c) Alternately, for self-anchored tanks less than 15 m (50 ft) diameter, the tank shall meet all of the following.

1) The tank shall meet the requirements of 5.10.2.6.a.1 through 5.

2) An elastic analysis[22] shall be performed to confirm the shell to bottom joint strength is at least 1.5 times the top joint strength with the tank empty and 2.5 times the top joint strength with the tank full.

3) Attachments (including nozzles and manholes) to the tank shall be designed to accommodate at least 100 mm (4 in.) of vertical shell movement without rupture.

4) The bottom is butt-welded.

d) For anchored tanks of any diameter, the tank shall meet the requirements of 5.10.2.6.a and the anchorage and counterweight shall be designed for 3 times the failure pressure calculated by F.6 as specified in 5.12.

• **5.10.2.7** ***Stiffeners:*** For all types of roofs, the plates may be stiffened by sections welded to the plates. Refer to 5.10.2.3 for requirements for supported cone roofs.

• **5.10.2.8** ***Alternate Designs:*** These rules cannot cover all details of tank roof design and construction. With the approval of the Purchaser, the roof need not comply with 5.10.4, 5.10.5, 5.10.6, and 5.10.7. The Manufacturer shall provide a roof designed and constructed to be as safe as otherwise provided for in this standard. In the roof design, particular attention should be given to preventing failure through instability.

5.10.2.9 ***Lateral Loads on Columns:*** When the Purchaser specifies lateral loads that will be imposed on the roof-supporting columns, the columns must be proportioned to meet the requirements for combined axial compression and bending as specified in 5.10.3.

5.10.3 Allowable Stresses

• **5.10.3.1 General**

The allowable strength of roof components shall be determined in accordance with the ANSI/AISC 360 using allowable strength design methodology (ASD).

[22] A frangible roof satisfies the emergency venting requirement for tanks exposed to fire outside the tank. See API 2000. Frangible roofs are not intended to provide emergency venting for other circumstances such as a fire inside the tank, utility failures, chemical reactions, or overfill. See API Publication 937 and API Publication 937-A.

5.10.3.2 Maximum Slenderness Ratios

For columns, the value L / r_c shall not exceed 180. For other compression members, the value L / r shall not exceed 200. For all other members, except tie rods whose design is based on tensile force, the value L / r shall not exceed 300.

where

L is the unbraced length, in millimeters (inches);

r_c is the least radius of gyration of column, in millimeters (inches);

r is the governing radius of gyration, in millimeters (inches).

5.10.4 Supported Cone Roofs

• **5.10.4.1** The slope of the roof shall be 1:16 or greater if specified by the Purchaser. If the rafters are set directly on chord girders, producing slightly varying rafter slopes, the slope of the flattest rafter shall conform to the specified or ordered roof slope.

5.10.4.2 Main supporting members, including those supporting the rafters, may be rolled or fabricated sections or trusses. Although these members may be in contact with the roof plates, the compression flange of a member or the top chord of a truss shall be considered as receiving no lateral support from the roof plates and shall be laterally braced, if necessary, by other acceptable methods. The allowable stresses in these members shall be governed by 5.10.3.

5.10.4.3 Structural members serving as rafters may be rolled or fabricated sections but in all cases shall conform to the rules of 5.10.2, 5.10.3, and 5.10.4. Rafters shall be designed for the dead load of the rafters and roof plates with the compression flange of the rafter considered as receiving no lateral support from the roof plates and shall be laterally braced if necessary (see 5.10.4.2). When considering additional dead loads or live loads, the rafters in direct contact with the roof plates applying the loading to the rafters may be considered as receiving adequate lateral support from the friction between the roof plates and the compression flanges of the rafters, with the following exceptions:

a) trusses and open-web joints used as rafters;

b) rafters with a nominal depth greater than 375 mm (15 in.);

c) rafters with a slope greater than 1:6.

• **5.10.4.4** Rafters shall be spaced to satisfy:

$$b = t(1.5F_y/p)^{\frac{1}{2}} \leq 2100 \text{ mm (84 in.)}$$

where

b is the maximum allowable roof plate span, measured circumferentially from center-to-center of rafters;

F_y is the specified minimum yield strength of roof plate;

t is the corroded roof thickness;

p is the uniform pressure as determined from load combinations given in 5.2.2.

5.10.4.5 Roof columns shall be made from either pipe or structural shapes as selected on the Data Sheet, Line 11. Pipe columns shall either be sealed or have openings on both the top and bottom of the column.

5.10.4.6 Rafter clips for the outer row of rafters shall be welded to the tank shell.

5.10.4.7 Roof support columns shall be provided at their bases with details that provide for the following.

a) ***Load Distribution***: Column loads shall be distributed over a bearing area based on the specified soil bearing capacity or foundation design. The pressure applied by the tank liquid height need not be considered when sizing column bases to distribute loads. If an unstiffened horizontal plate is designed to distribute the load, it shall have a nominal thickness of not less than 12 mm ($^1/_2$ in.). Alternatively, the column load may be distributed by an assembly of structural beams. The plate or members shall be designed to distribute the load without exceeding allowable stresses prescribed in 5.10.3.1.

b) ***Corrosion and Abrasion Protection***: At each column a wear plate with a nominal thickness of not less than 6 mm ($^1/_4$ in.) shall be welded to the tank bottom with a 6 mm ($^1/_4$ in.) minimum fillet weld. A single adequate thickness plate may be designed for the dual functions of load distribution and corrosion/abrasion protection.

c) ***Vertical Movement***: The design shall allow the columns to move vertically relative to the tank bottom without restraint in the event of tank overpressure or bottom settlement.

d) ***Lateral Movement***: The columns shall be effectively guided at their bases to prevent lateral movement. The guides shall remain effective in the event of vertical movement of columns relative to tank bottom of up to 75 mm (3 in.). The guides shall be located such that they are not welded directly to the tank bottom plates.

5.10.4.8 Three acceptable arrangements to provide the functions required by 5.10.4.7 are illustrated in Figure 5.26.

5.10.4.9 For Annex F tanks, when supporting members are attached to the roof plate, consideration shall be given to the design of the supporting members and their attachment details when considering internal pressure.

5.10.4.10 Center columns shall be designed for both the balanced snow load and unbalanced snow load. Intermediate columns need only be designed for the balanced snow load.

5.10.5 Self-Supporting Cone Roofs

NOTE Self-supporting roofs whose roof plates are stiffened by sections welded to the plates need not conform to the minimum thickness requirements, but the nominal thickness of the roof plates shall not be less than 4.8 mm ($^3/_{16}$ in.) when so designed by the Manufacturer, subject to the approval of the Purchaser.

5.10.5.1 Self-supporting cone roofs shall conform to the following requirements:

$\theta \leq 37$ degrees (slope = 9:12)

$\theta \geq 9.5$ degrees (slope = 2:12)

In SI units:

Nominal thickness shall not be less than the greatest of $\frac{D}{4.8\sin\theta}\sqrt{\frac{T}{2.2}} + \text{CA}$, $\frac{D}{5.5\sin\theta}\sqrt{\frac{U}{2.2}} + \text{CA}$, and 5 mm

Corroded thickness shall not be more than 13 mm.

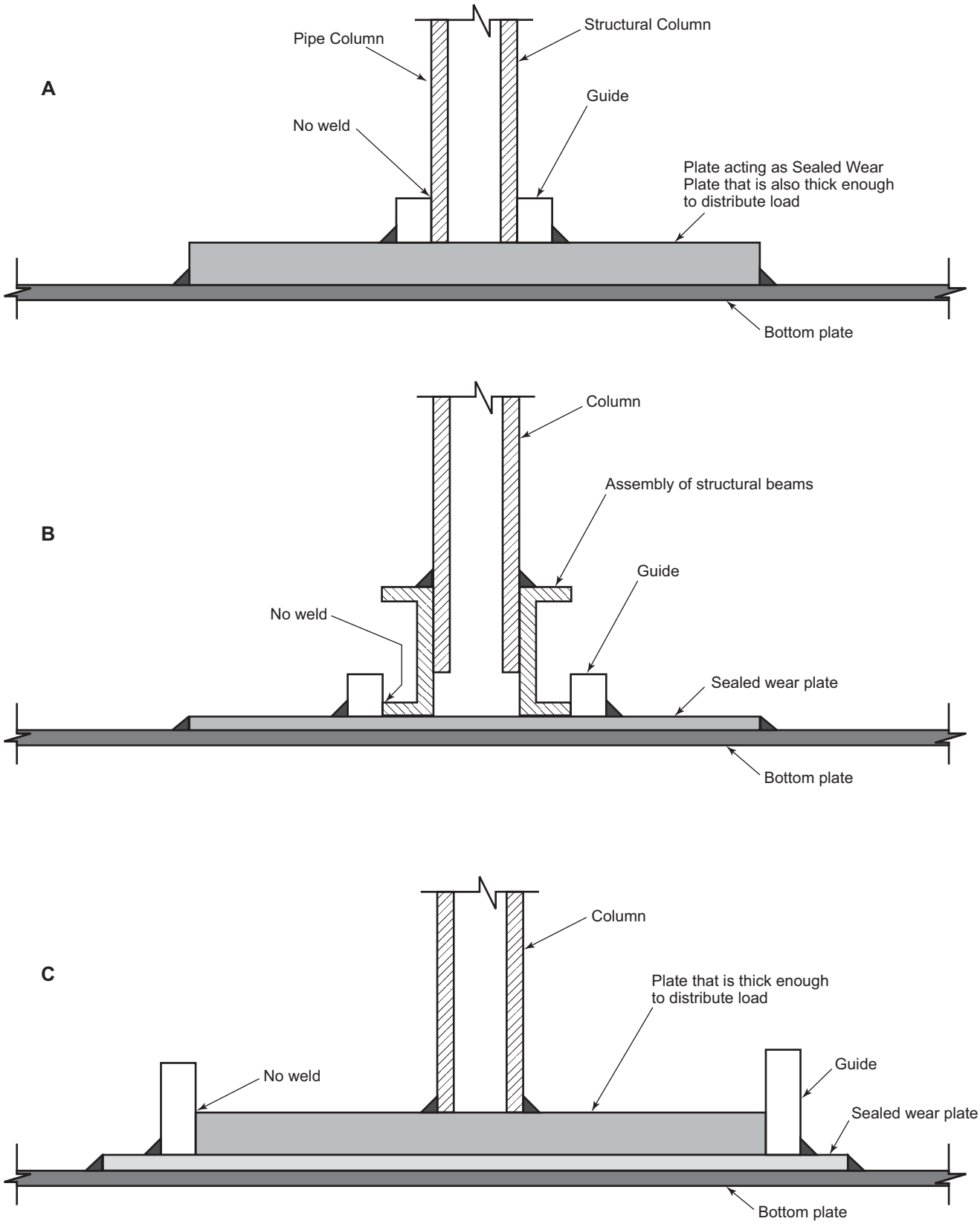

Figure 5.26—Some Acceptable Column Base Details

where

D is the nominal diameter of the tank, in meters;

T is the greater of load combinations 5.2.2 (e)(1) and (e)(2) with balanced snow load S_b, in kPa;

U is the greater of load combinations 5.2.2 (e)(1) and (e)(2) with unbalanced snow load S_u, in kPa;

θ is the angle of cone elements to the horizontal, in degrees;

CA is the corrosion allowance.

In USC units:

Nominal thickness shall not be less than the greatest of $\frac{D}{400\sin\theta}\sqrt{\frac{T}{45}}+\text{CA}$, $\frac{D}{460\sin\theta}\sqrt{\frac{U}{45}}+\text{CA}$, and $^{3}/_{16}$ in.

Corroded thickness shall not be more than $^{1}/_{2}$ in.

where

D is the nominal diameter of the tank shell, in feet;

T is the greater of load combinations 5.2.2 (e)(1) and (e)(2) with balanced snow load S_b (lbf/ft^2);

U is the greater of load combinations 5.2.2 (e)(1) and (e)(2) with unbalanced snow load S_u (lbf/ft^2);

θ is the angle of cone elements to the horizontal, in degrees;

CA is the corrosion allowance.

5.10.5.2 The participating area at the roof-to-shell joint shall be determined using Figure F.2 and the nominal material thickness less any corrosion allowance shall equal or exceed the following:

$$\frac{pD^2}{8F_a\tan\theta}$$

where

p is the greater of load combinations 5.2.2 (e)(1) and (e)(2);

D is the nominal diameter of the tank shell;

θ is the angle of cone elements to the horizontal;

F_a equals (0.6 F_y), the least allowable tensile stress for the materials in the roof-to-shell joint;

F_y is the Least Yield Strength of roof-to-shell joint material at maximum design temperature.

• 5.10.6 Self-Supporting Dome and Umbrella Roofs

NOTE Self-supporting roofs whose roof plates are stiffened by sections welded to the plates need not conform to the minimum thickness requirements, but the thickness of the roof plates shall not be less than 4.8 mm ($^{3}/_{16}$ in.) when so designed by the Manufacturer, subject to the approval of the Purchaser.

5.10.6.1 Self-supporting dome and umbrella roofs shall conform to the following requirements:

Minimum radius = 0.8D (unless otherwise specified by the Purchaser)

Maximum radius = 1.2D

In SI units:

Nominal thickness shall not be less than the greatest of $\frac{r_r}{2.4}\sqrt{\frac{T}{2.2}} + \text{CA}$, $\frac{r_r}{2.7}\sqrt{\frac{U}{2.2}} + \text{CA}$, and 5 mm

Corroded thickness shall not be more than 13 mm.

where

D is the nominal diameter of the tank shell, in meters;

T is the greater of load combinations 5.2.2 (e)(1) and (e)(2) with balanced snow load S_b (kPa);

U is the greater of load combinations 5.2.2 (e)(1) and (e)(2) with unbalanced snow load S_u (kPa);

r_r is the roof radius, in meters.

In USC units:

Nominal thickness shall not be less than the greatest of $\frac{r_r}{200}\sqrt{\frac{T}{45}} + \text{CA}$, $\frac{r_r}{230}\sqrt{\frac{U}{45}} + \text{CA}$, and $^3/_{16}$ in.

Corroded thickness shall not be more than $^1/_2$ in.

where

D is the nominal diameter of the tank shell, in feet;

T is the greater of load combinations 5.2.2 (e)(1) and (e)(2) with balanced snow load S_b (lbf/ft^2);

U is the greater of load combinations 5.2.2 (e)(1) and (e)(2) with unbalanced snow load S_u (lbf/ft^2);

r_r is the roof radius, in feet.

5.10.6.2 The participating area at the roof-to-shell joint determined using Figure F.2 and the nominal material thickness less any corrosion allowance shall equal or exceed:

$$\frac{pD^2}{8F_a \tan\theta}$$

where

p is the greater of load combinations 5.2.2 (e)(1) and (e)(2);

D is the nominal diameter of the tank shell;

θ is the roof angle to horizontal at the shell, in degrees;

F_a equals (0.6 F_y), the least allowable tensile stress for the materials in the roof-to-shell joint;

F_y is the Least Yield Strength of roof-to-shell joint material at maximum design temperature.

5.10.7 Top-Angle Attachment for Self-Supporting Roofs

Information and certain restrictions on types of top-angle joints are provided in Item c of 5.1.5.9. Details of welding are provided in 7.2.

5.11 Wind Load on Tanks (Overturning Stability)

5.11.1 Wind Pressure

Overturning stability shall be calculated using the wind pressures given in 5.2.1(k).

5.11.2 Unanchored Tanks

Unanchored tanks shall meet the requirements of 5.11.2.1 or 5.11.2.2. See Figure 5.27.

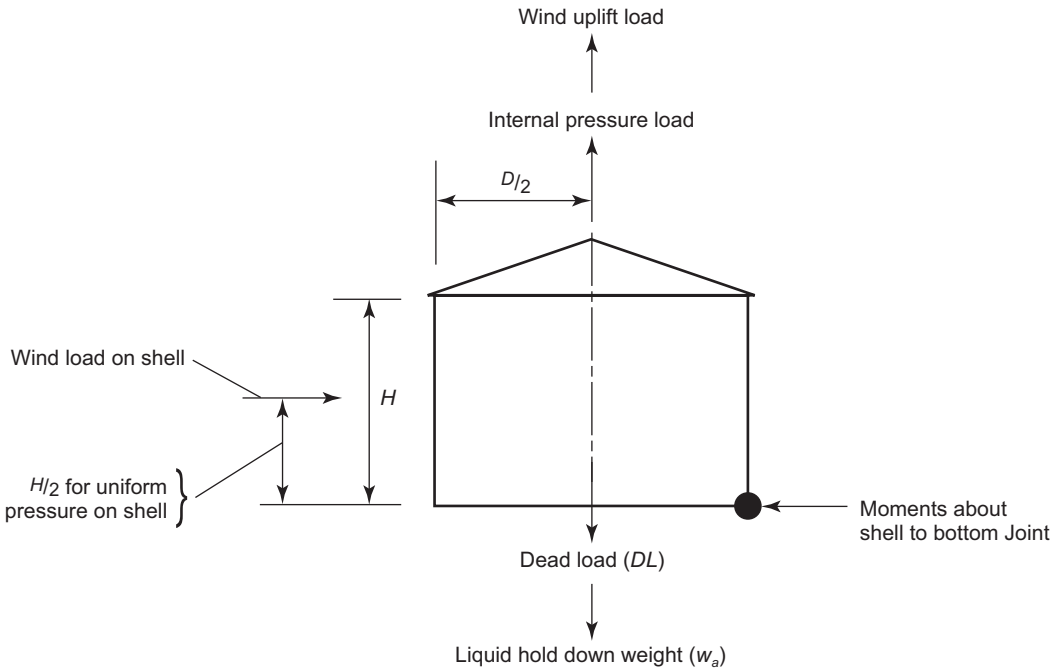

Figure 5.27—Overturning Check for Unanchored Tanks

5.11.2.1 Unanchored tanks shall satisfy all of the following uplift criteria:

1) $0.6M_w + M_{Pi} < M_{DL}/1.5 + M_{DLR}$

2) $M_w + F_p(M_{Pi}) < (M_{DL} + M_F)/2 + M_{DLR}$

3) $M_{ws} + F_p\,(MPi) < MDL/1.5 + MDLR$

where

F_P is the pressure combination factor, see 5.2.2;

M_{Pi} is the moment about the shell-to-bottom joint from design internal pressure;

M_w is the overturning moment about the shell-to-bottom joint from horizontal plus vertical wind pressure;

M_{DL} is the moment about the shell-to-bottom joint from the nominal weight of the shell;

M_F is the moment about the shell-to-bottom joint from liquid weight;

M_{DLR} is the moment about the shell-to-bottom joint from the nominal weight of the roof plate plus any attached structural;

M_{WS} is the overturning moment about the shell-to-bottom joint from horizontal wind pressure.

5.11.2.2 Unanchored tanks with supported cone roofs meeting the requirements of 5.10.4 shall satisfy the following criteria:

$$M_{ws} + F_p\,(M_{Pi}) < M_{DL}/1.5 + M_{DLR}$$

5.11.2.3 The liquid weight (w_L) is the weight of a band of liquid at the shell using a specific gravity of 0.7 and a height of one-half the design liquid height H. w_L shall be the lesser of 140.8 HD for SI Units (0.90 HD for USC units) or the following:

In SI units:

$$w_L = 59 t_b \sqrt{F_{by} H} \quad \text{(N/m)}$$

In USC units:

$$w_L = 4.67 t_b \sqrt{F_{by} H} \quad \text{(lbf/ft)}$$

where

F_{by} is the minimum specified yield stress of the bottom plate under the shell, in MPa (lbf/in.^{2});

H is the design liquid height, in meters (ft);

D is the tank diameter, in meters (ft);

t_b is the required corroded thickness of the bottom plate under the shell, in mm (inches), that is used to resist wind overturning. The bottom plate shall have the following restrictions:

1) The corroded thickness, t_b, used to calculate w_L shall not exceed the first shell course corroded thickness less any shell corrosion allowance.

2) When the bottom plate under the shell is thicker due to wind overturning than the remainder of the tank bottom, the minimum projection of the supplied thicker annular ring inside the tank wall, L, shall be the greater of 450 mm (18 in.) or L_b, however, need not be more than 0.035D.

In SI units:

$$L_b = 0.0291\ t_b\sqrt{F_{by}/H} \leq 0.035\ D \text{ (in meters)}$$

In USC units

$$L_b = 0.365\ t_b\sqrt{F_{by}/H} \leq 0.035\ D \text{ (in feet)}$$

5.11.3 Anchored Tanks

When the requirements of 5.11.2 cannot be satisfied, anchor the tank per the requirements of 5.12.

5.11.4 Sliding Friction

Unless otherwise required, tanks that may be subject to sliding due to wind shall use a maximum allowable sliding friction of 0.40 multiplied by the force against the tank bottom.

5.12 Tank Anchorage

5.12.1 When a tank is required to be anchored per 5.11, Annex E, Annex F, or when a tank is anchored for any other reason, the following minimum requirements shall be met.

5.12.2 Anchorage shall be provided to resist each of the uplift load cases listed in Table 5.21a and Table 5.21b. The load per anchor shall be:

$$t_b = U/N$$

where

t_b is the load per anchor;

U is the net uplift load per Table 5.21a and Table 5.21b;

N is the number of anchors (a minimum of 4 is required);

5.12.3 The spacing between anchors shall not exceed 3 m (10 ft).

5.12.4 Allowable stresses for anchor bolts shall be in accordance with Table 5.21a and Table 5.21b for each load case. The allowable stress shall apply to the net (root) area of the anchor bolt.

• **5.12.5** The Purchaser shall specify any corrosion allowance that is to be added to the anchor dimensions. Unless otherwise specified, corrosion allowance for anchor bolts shall be applied to the nominal diameter. The minimum anchor bolt diameter is 1 in. plus any specified corrosion allowance.

• **5.12.6** Attachment of the anchor bolts to the shell shall be through stiffened chair-type assemblies or anchor rings of sufficient size and height. An acceptable procedure for anchor chair design is given in AISI Steel Plate Engineering Data, Volume 2, Part 5, "Anchor Bolt Chairs." When acceptable to the Purchaser, anchor straps may be used if the shell attachment is via chair-type assemblies or anchor rings of sufficient size and height.

5.12.7 Other evaluations of anchor attachments to the shell may be made to ensure that localized stresses in the shell will be adequately handled. An acceptable evaluation technique is given in ASME Section VIII Division 2, Annex 4, using the allowable stresses given in this section for S_m. The method of attachment shall take into consideration the effect of deflection and rotation of the shell.

Table 5.21a—Uplift Loads (SI)

Uplift Load Case	Net Uplift Formula, U (N)	Allowable Anchor Bolt Stress (MPa)	Allowable Shell Stress at Anchor Attachment (MPa)
Design Pressure	$[(P - 0.08t_h) \times D^2 \times 785] - W_1$	$^5/_{12} \times F_y$	$^2/_3 F_{ty}$
Test Pressure	$[(P_t - 0.08t_h) \times D^2 \times 785] - W_1$	$^5/_9 \times F_y$	$^5/_6 F_{ty}$
Failure Pressure[a]	$[(1.5 \times P_f - 0.08t_h) \times D^2 \times 785] - W_3$	F_y	F_{ty}
Wind Load	$P_{WR} \times D^2 \times 785 + [4 \times M_{WH}/D] - W_2$	$0.8 \times F_y$	$^5/_6 F_{ty}$
Seismic Load	$[4 \times M_{rw}/D] - W_2 (1 - 0.4A_V)$	$0.8 \times F_y$	$^5/_6 F_{ty}$
Design Pressure[b] + Wind	$[(F_p P + P_{WR} - 0.08t_h) \times D^2 \times 785] + [4 M_{WH}/D] - W_1$	$^5/_9 \times F_y$	$^5/_6 F_{ty}$
Design Pressure[b] + Seismic	$[(F_p P - 0.08t_h) \times D^2 \times 785] + [4 M_{rw}/D] - W_1 (1 - 0.4A_V)$	$0.8 \times F_y$	$^5/_6 F_{ty}$
Frangibility Pressure[c]	$[(3 \times P_f - 0.08t_h) \times D^2 \times 785] - W_3$	F_y	F_{ty}

where

A_v is the vertical earthquake acceleration coefficient, in % g;

D is the tank diameter, in meters;

F_p is the pressure combination factor;

F_{ty} is the minimum yield strength of the bottom shell course, in MPa;

F_y is the minimum yield strength of the anchor bolt or 250 MPa, whichever is less, in MPa;

H is the tank height, in meters;

M_{WH} equals $P_{WS} \times D \times H^2/_2$, in N-m;

M_{rw} is the seismic moment, in N-m (see Annex E);

P is the design pressure, in kPa (see Annex F);

P_f is the failure pressure, in kPa (see Annex F);

P_t is the test pressure, in kPa (see Annex F);

P_{WR} is the wind uplift pressure on roof, in kPa;

P_{WS} is the wind pressure on shell, in N/m^2;

t_h is the roof plate thickness (the corroded thickness when used with W_1 and nominal thickness when used with W_3), in millimeters;

W_1 is the dead load of shell minus any corrosion allowance and any dead load other than roof plate acting on the shell minus any corrosion allowance, in N;

W_2 is the dead load of shell minus any corrosion allowance and any dead load including roof plate acting on the shell minus any corrosion allowance, in N;

W_3 is the dead load of the shell using nominal thicknesses and any dead load other than roof plate acting on the shell using nominal thicknesses, in N.

[a] Failure pressure applies to tanks falling under F.1.3 only. The failure pressure shall be calculated using nominal thicknesses.

[b] Refer to 5.2.2 concerning the pressure combination factor applied to the design pressure.

[c] Frangibility pressure applies only to tanks designed to 5.10.2.6 d. The frangibility pressure shall be calculated using nominal thicknesses.

Table 5.21b—Uplift Loads (USC)

Uplift Load Case	Net Uplift Formula, U (lbf)	Allowable Anchor Bolt Stress (lbf/in.^{2})	Allowable Shell Stress at Anchor Attachment (lbf/in.^{2})
Design Pressure	$[(P - 8t_h) \times D^2 \times 4.08] - W_1$	$^5/_{12} \times F_y$	$^2/_3 F_{ty}$
Test Pressure	$[(P_t - 8t_h) \times D^2 \times 4.08] - W_1$	$^5/_9 \times F_y$	$^5/_6 F_{ty}$
Failure Pressure[a]	$[(1.5 \times P_f - 8t_h) \times D^2 \times 4.08] - W_3$	F_y	F_{ty}
Wind Load	$P_{WR} \times D^2 \times 4.08 + [4 \times M_{WH}/D] - W_2$	$0.8 \times F_y$	$^5/_6 F_{ty}$
Seismic Load	$[4 \times M_{rw}/D] - W_2 (1 - 0.4A_V)$	$0.8 \times F_y$	$^5/_6 F_{ty}$
Design Pressure[b] + Wind	$[(F_p P + P_{WR} - 8t_h) \times D^2 \times 4.08] + [4 M_{WH}/D] - W_1$	$^5/_9 \times F_y$	$^5/_6 F_{ty}$
Design Pressure[b] + Seismic	$[(F_p P - 8t_h) \times D^2 \times 4.08] + [4 M_{rw}/D] - W_1 (1 - 0.4A_V)$	$0.8 \times F_y$	$^5/_6 F_{ty}$
Frangibility Pressure[c]	$[(3 \times P_f - 8t_h) \times D^2 \times 4.08] - W_3$	F_y	F_{ty}

where

A_v is the vertical earthquake acceleration coefficient, in % g;

D is the tank diameter, in feet;

F_p is the pressure combination factor;

F_{ty} is the minimum yield strength of the bottom shell course, in psi;

F_y is the minimum yield strength of the anchor bolt or 36,000 psi, whichever is less, in psi;

H is the tank height, in feet;

M_{WH} equals $P_{WS} \times D \times H^2/_2$, in ft-lbs;

M_{rw} is the seismic moment, in ft-lbs (see Annex E);

P is the design pressure, in inches of water column (see Annex F);

P_f is the failure pressure, in inches of water column (see Annex F);

P_t is the test pressure, in inches of water column (see Annex F);

P_{WR} is the wind uplift pressure on roof, in inches of water column;

P_{WS} is the wind pressure on shell, in lbs/ft^2;

t_h is the roof plate thickness (the corroded thickness when used with W_1 and nominal thickness when used with W_3), in inches;

W_1 is the dead load of shell minus any corrosion allowance and any dead load other than roof plate acting on the shell minus any corrosion allowance, in lbf;

W_2 is the dead load of shell minus any corrosion allowance and any dead load including roof plate acting on the shell minus any corrosion allowance, in lbf;

W_3 is the dead load of the shell using nominal thicknesses and any dead load other than roof plate acting on the shell using nominal thicknesses, in lbf.

[a] Failure pressure applies to tanks falling under F.1.3 only. The failure pressure shall be calculated using nominal thicknesses.

[b] Refer to 5.2.2 concerning the pressure combination factor applied to the design pressure.

[c] Frangibility pressure applies only to tanks designed to 5.10.2.6 d. The frangibility pressure shall be calculated using nominal thicknesses.

5.12.8 Allowable stresses for anchorage parts shall be in accordance with 5.10.3. A 33 % increase of the allowable stress may be used for wind or seismic loading conditions.

5.12.9 The maximum allowable local stress in the shell at the anchor attachment shall be in accordance with Table 5.21a and Table 5.21b unless an alternate evaluation is made in accordance with 5.12.7.

• **5.12.10** When specified by the Purchaser, the anchors shall be designed to allow for thermal expansion of the tank resulting from a temperature greater than 93 °C (200 °F).

5.12.11 Any anchor bolts shall be uniformly tightened to a snug fit, and any anchor straps shall be welded while the tank is filled with test water but before any pressure is applied on top of the water. Measures such as peening the threads or adding locking nuts, shall be taken to prevent the nuts from backing off the threads.

5.12.12 The embedment strength of the anchor in the foundation shall be sufficient to develop the specified minimum yield strength of the anchor. Hooked anchors or end plates may be used to resist pullout.

5.12.13 The foundation shall provide adequate counterbalancing weight to resist the design uplift loads in accordance with the following.

5.12.13.1 The counterbalancing weight, such as a concrete ringwall, shall be designed so that the resistance to net uplift is in accordance with Table 5.21a and Table 5.21b. When considering uplift due to a wind or seismic moment, an evaluation shall be made to insure overturning stability of the foundation and to insure soil-bearing pressures are within allowable stress levels as determined using the recommendations of Annex B.

5.12.13.2 When a footing is included in the ringwall design, the effective weight of the soil above the footing may be included in the counterbalancing weight.

SECTION 6—FABRICATION

6.1 General

6.1.1 Workmanship

6.1.1.1 All work of fabricating API e.g. 650 tanks shall be done in accordance with this standard and with the permissible alternatives specified in the Purchaser's inquiry or order. The workmanship and finish shall be first class in every respect and subject to the closest inspection by the Manufacturer's inspector even if the Purchaser has waived any part of the inspection.

6.1.1.2 When material requires straightening, the work shall be done by pressing or another noninjurious method prior to any layout or shaping. Heating or hammering is not permissible unless the material is maintained at forging temperature during straightening.

6.1.1.3 Materials used to aid in the fabrication of tanks shall not have a detrimental effect on the structural integrity of the tank. Lubricants, crayons, adhesives, and anti-weld spatter compounds shall not contain materials that will be detrimental to the tank, e.g. sulfur and chloride compounds for stainless steel materials. Attachments that will be welded to the pressure boundary shall not have a zinc or cadmium coating in the weld area within 12 mm (0.5 in.) of the weld.

6.1.2 Finish of Plate Edges

The edges of plates may be sheared, machined, chipped, or machine gas cut. Shearing shall be limited to plates less than or equal to 10 mm ($^3/_8$ in.) thick used for butt-welded joints and to plates less than or equal to 16 mm ($^5/_8$ in.) thick used for lap-welded joints.

NOTE With the Purchaser's approval, the shearing limitation on plates used for butt-welded joints may be increased to a thickness less than or equal to 16 mm ($^5/_8$ in.).

When edges of plates are gas cut, the resulting surfaces shall be uniform and smooth and shall be freed from scale and slag accumulations before welding. After cut or sheared edges are wire brushed, the fine film of rust adhering to the edges need not be removed before welding. Circumferential edges of roof and bottom plates may be manually gas cut.

6.1.3 Shaping of Shell Plates

Figure 6-1 provides criteria for shaping of plates to the curvature of the tank prior to installation in the tank. Shaping of plates concurrently with installation in the tank shell is permitted if the tank diameter exceeds the limit in Figure 6.1 or if the Manufacturer's alternate procedure for any diameter has been accepted by the Purchaser.

6.1.4 Marking

All special plates that are cut to shape before shipment as well as roof-supporting structural members shall be marked as shown on the Manufacturer's drawings.

6.1.5 Shipping

Plates and tank material shall be loaded in a manner that ensures delivery without damage. Bolts, nuts, nipples, and other small parts shall be boxed or put in kegs or bags for shipment. All flange faces and other machined surfaces shall be protected against corrosion and from physical damage.

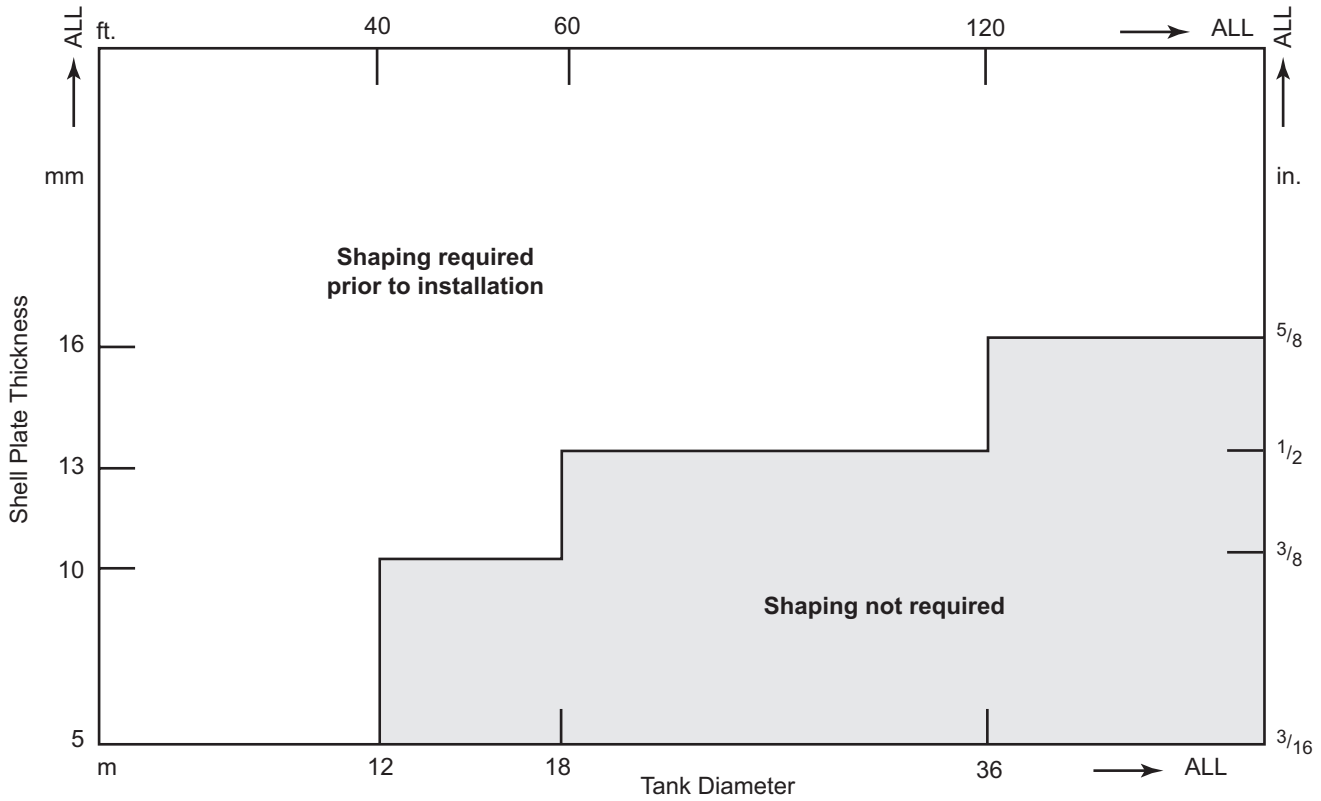

NOTE Any combination of diameter and thickness falling on or above the solid line requires shaping prior to installation.

Figure 6.1—Shaping of Plates

6.2 Shop Inspection

• **6.2.1** The Purchaser's inspector shall be permitted free entry to all parts of the Manufacturer's plant that are concerned with the contract whenever any work under the contract is being performed. The Manufacturer shall afford the Purchaser's inspector all reasonable facilities to assure the inspector that the material is being furnished in accordance with this standard. Also, the Manufacturer shall furnish samples or specimens of materials for the purpose of qualifying welders in accordance with 9.3.

Unless otherwise specified, inspection shall be made at the place of manufacture prior to shipment. The Manufacturer shall give the Purchaser ample notice of when the mill will roll the plates and when fabrication will begin so that the Purchaser's inspector may be present when required. The usual mill test of plates shall be deemed sufficient to prove the quality of the steel furnished (except as noted in 6.2.2). Mill test reports or certificates of compliance, as provided for in the material specification, shall be furnished to the Purchaser only when the option is specified in the original contract that they be provided.

6.2.2 Mill and shop inspection shall not release the Manufacturer from responsibility for replacing any defective material and for repairing any defective workmanship that may be discovered in the field.

• **6.2.3** Any material or workmanship that in any way fails to meet the requirements of this standard may be rejected by the Purchaser's inspector, and the material involved shall not be used under the contract. Material that shows injurious defects subsequent to its acceptance at the mill, subsequent to its acceptance at the Manufacturer's works, or during erection and inspecting of the tank will be rejected. The Manufacturer will be notified of this in writing and will be required to furnish new material promptly and make the necessary replacements or suitable repairs.

- **6.2.4.a** The Manufacturer shall visually inspect all edges of shell and roof plates before installing the plates in the tank or before inserting a nozzle into the plate to determine if laminations are present. If a lamination is visually detected, the Manufacturer shall ultrasonically examine the area to determine the extent of the laminations and shall reject the plate or make repairs in accordance with 6.2.4b.

- **6.2.4.b** For laminations found not exceeding 75 mm (3 in.) in length or 25 mm (1 in.) in depth, repairs may be made by edge gouging and rewelding to seal the lamination. The Manufacturer shall submit the edge repair procedure for Purchaser acceptance prior to the start of fabrication. For laminations exceeding these limits, the Manufacturer shall either reject the plate or repair the plate by entirely removing the lamination. Before making such repairs the Manufacturer shall document the extent of the lamination and submit a case-specific repair procedure for Purchaser approval.

SECTION 7—ERECTION

7.1 General

- **7.1.1** Required foundation and grade work shall be supplied by the Purchaser, unless otherwise specified in the Contract. The Manufacturer shall check level tolerances and contour before starting work, and shall notify the Purchaser of any deficiency discovered that might affect the quality of the finished work. Deficiencies noted shall be rectified by the Purchaser unless otherwise agreed by the Manufacturer.

7.1.2 After the Purchaser has turned the tank foundation over to the Manufacturer, the Manufacturer shall maintain the grade under the tank in true profile and free of foreign materials such as clay, coal, cinders, metal scraps, or animal or vegetable matter of any sort. The Manufacturer shall repair any damage to either the foundation or grade surface caused by the Manufacturer's operations.

7.1.3 Coating or foreign material shall not be used between surfaces in contact in the construction of the tank, except as permitted by 7.2.1.10.

- **7.1.4** Coating or other protection for structural work inside and outside of the tank shall be as specified in the contract and shall be applied by competent workers.

7.1.5 All temporary attachments welded to the exterior of the tank shall be removed and any noticeable projections of weld metal shall be ground smooth with the surface of the plate. In the event of inadvertent tearing of the plate when attachments are removed, the damaged area shall be repaired by welding and subsequent grinding of the surface to a smooth condition.

7.1.6 All temporary attachments welded to the interior of the tank, including the shell, roof, tank bottom, roof columns and other internal structures shall be removed and any noticeable projections of weld metal shall be ground smooth. In the event of inadvertent tearing of the plate when attachments are removed, the damaged area shall be repaired by welding and subsequent grinding of the surface to a smooth condition. This work must be completed before the application of internal linings, the air raising of a fixed roof, the initial floating of a floating roof, and any other circumstance whereby projections may cause damage.

7.2 Details of Welding

7.2.1 General

- **7.2.1.1** Tanks and their structural attachments shall be welded by the shielded metal-arc, gas metal-arc, gas tungsten-arc, oxyfuel, flux-cored arc, submerged-arc, electroslag, or electrogas process using suitable equipment. Use of the oxyfuel, electroslag, or electrogas process shall be by agreement between the Manufacturer and the Purchaser. Use of the oxyfuel process is not permitted when impact testing of the material is required. All tank welding shall be performed by manual, semiautomatic arc, machine, or automatic welding in accordance with the requirements of Section 9 of this standard and welding procedure specifications as described in Section IX of the ASME *Code*. Welding shall be performed in a manner that ensures complete fusion with the base metal.

7.2.1.2 At the Purchaser's request, the Purchaser may designate applicable sections of API 582 for supplementary welding guidelines and practices.

7.2.1.3 No welding of any kind shall be performed when the surfaces to be welded are wet from rain, snow, or ice; when rain or snow is falling on such surfaces; or during periods of high winds unless the welder and the work are properly shielded. Also, preheat shall be applied when metal temperature is below the temperature required by Table 7.1a and Table 7.1b. In that case the base metal shall be heated to at least the temperature indicated in Table 7.1a and Table 7.1b within 75 mm (3 in.) of the place where welding is to be started and maintained 75 mm (3 in.) ahead of the arc.

Table 7.1a—(SI) Minimum Preheat Temperatures

Material Group per Table 4-4a	Thickness (t) of Thicker Plate (mm)	Minimum Preheat Temperature
Groups I, II, III & IIIA	$t \leq 32$	0 ºC
	$32 < t \leq 40$	10 ºC
	$t > 40$	93 ºC
Groups IV, IVA, V & VI	$t \leq 32$	10 ºC
	$32 < t \leq 40$	40 ºC
	$t > 40$	93 ºC

Table 7.1b—(USC) Minimum Preheat Temperatures

Material Group per Table 4-4b	Thickness (t) of Thicker Plate (in.)	Minimum Preheat Temperature
Groups I, II, III & IIIA	$t \leq 1.25$	32 ºF
	$1.25 < t \leq 1.50$	50 ºF
	$t > 1.50$	200 ºF
Groups IV, IVA, V & VI	$t \leq 1.25$	50 ºF
	$1.25 < t \leq 1.50$	100 ºF
	$t > 1.50$	200 °F

7.2.1.4 Each layer of weld metal or multilayer welding shall be cleaned of slag and other deposits before the next layer is applied.

7.2.1.5 The edges of all welds shall merge smoothly with the surface of the plate without a sharp angle.

7.2.1.6 All welding shall be free from coarse ripples, grooves, overlaps, abrupt ridges, and valleys that interfere with interpretation of NDE results.

7.2.1.7 During the welding operation, plates shall be held in close contact at all lap joints.

• **7.2.1.8** The method proposed by the Manufacturer for holding the plates in position for welding shall be submitted to the Purchaser's inspector for approval if approval has not already been given in writing by the Purchaser.

7.2.1.9 Tack welds used during the assembly of vertical joints of tank shells shall be removed and shall not remain in the finished joints when the joints are welded manually. When such joints are welded by the submerged-arc process, the tack welds shall be thoroughly cleaned of all welding slag but need not be removed if they are sound and are thoroughly fused into the subsequently applied weld beads.

Whether tack welds are removed or left in place, they shall be made using a fillet-weld or butt-weld procedure qualified in accordance with Section IX of the ASME *Code*. Tack welds to be left in place shall be made by welders qualified in accordance with Section IX of the ASME *Code* and shall be visually examined for defects, which shall be removed if found (see 8.5 for criteria for visual examination).

7.2.1.10 If protective coatings are to be used on surfaces to be welded, the coatings shall be included in welding-procedure qualification tests for the brand formulation and maximum thickness of coating to be applied.

7.2.1.11 Low-hydrogen electrodes shall be used for all manual metal-arc welds in annular rings and shell courses, including the attachment of the first shell course to bottom or annular plates, as follows.

a) Where the plates are thicker than 12.5 mm ($^1/_2$ in.) (based on the thickness of the thicker member being joined) and made of material from Groups I–III.

b) For all thicknesses when the plates are made of material from Groups IV, IVA, V, and VI.

7.2.1.12 Non-structural small attachments such as insulation clips, studs and pins but not insulation support rings or bars may be welded by the arc stud, capacitor discharge or shielded metal arc process to the exterior of the shell including reinforcing plates or PWHT assemblies and roof either before or after hydrostatic testing is performed, but before the tank will be filled with product provided:

a) The attachment locations meet the spacing requirements of 5.8.1.2a.

b) The arc stud welding process is limited to 10 mm ($^3/_8$ in.) maximum diameter studs or equivalent cross-section.

c) The maximum shielded metal arc electrode is limited to 3 mm ($^1/_8$ in.) diameter and shall be a low-hydrogen type.

d) The attachment welds, except for those made by the capacitor discharge method, shall be inspected per 7.2.3.6. The attachment welds made by the capacitor discharge method shall be visually examined for all types and groups of shell materials.

e) All stud welding and capacitor discharge procedures have been qualified in accordance with ASME Section IX. Capacitor discharge procedures do not require procedure qualification provided the power output is 125 watt-sec or less.

The shielded metal arc weld procedures shall meet the requirements of Section 9 for qualification for use.

7.2.2 Bottoms

7.2.2.1 After the bottom plates are laid out and tacked, they shall be joined by welding the joints in a sequence that the Manufacturer has found to result in the least distortion from shrinkage and thus to provide as nearly as possible a plane surface.

7.2.2.2 The welding of the shell to the bottom shall be practically completed before the welding of bottom joints that may have been left open to compensate for shrinkage of any welds previously made is completed.

7.2.2.3 Shell plates may be aligned by metal clips attached to the bottom plates, and the shell may be tack welded to the bottom before continuous welding is started between the bottom edge of the shell plate and the bottom plates.

7.2.3 Shells

7.2.3.1 Plates to be joined by butt welding shall be matched accurately and retained in position during the welding operation. Misalignment in completed vertical joints for plates greater than 16 mm ($^5/_8$ in.) thick shall not exceed 10 % of the plate thickness or 3 mm ($^1/_8$ in.), whichever is less; misalignment for plates less than or equal to 16 mm ($^5/_8$ in.) thick shall not exceed 1.5 mm ($^1/_{16}$ in.).

7.2.3.2 In completed horizontal butt joints, the upper plate shall not project beyond the face of the lower plate at any point by more than 20 % of the thickness of the upper plate, with a maximum projection of 3 mm ($^1/_8$ in.); however, for upper plates less than 8 mm ($^5/_{16}$ in.) thick, the maximum projection shall be limited to 1.5 mm ($^1/_{16}$ in.).

7.2.3.3 The upper plate at a horizontal butt joint shall have a 4:1 taper when its thickness is more than 3 mm ($^1/_8$ in.) greater than the lower plate.

7.2.3.4 The reverse side of double-welded butt joints shall be thoroughly cleaned in a manner that will leave the exposed surface satisfactory for fusion of the weld metal to be added, prior to the application of the first bead to the second side. This cleaning may be done by chipping; grinding; melting out; or where the back of the initial bead is smooth and free from crevices that might entrap slag, another method that, upon field inspection, is acceptable to the Purchaser.

7.2.3.5 For circumferential and vertical joints in tank shell courses constructed of material more than 40 mm ($1^1/_2$ in.) thick (based on the thickness of the thicker plate at the joint), multipass weld procedures are required, with no pass over 19 mm ($^3/_4$ in.) thick permitted.

7.2.3.6 The requirements of this section shall be followed when welding to Group IV, IVA, V, and VI materials. Permanent and temporary attachments (see 7.2.1.11 for information on shell-to-bottom welds) shall be welded with low-hydrogen electrodes. Both permanent and temporary attachments shall be welded in accordance with a procedure that minimizes the potential for underbead cracking. The welds of permanent attachments (not including shell-to-bottom welds) and areas where temporary attachments are removed, shall be examined visually and by either the magnetic particle method or by the liquid penetrant method (see 8.2, 8.4, or 8.5 for the appropriate examination criteria).

7.2.3.7 Completed welds of stress-relieved assemblies shall be examined by visual, as well as by magnetic particle or penetrant methods, after stress relief, but before hydrostatic test.

7.2.3.8 Flush-type connections shall be inspected according to 5.7.8.11.

7.2.4 Shell-to-Bottom Welds

7.2.4.1 The initial weld pass inside the shell shall have all slag and non-metals removed from the surface of the weld and then examined for its entire circumference both visually and by one of the following methods to be agreed to by Purchaser and the Manufacturer. If method “a” is applied, either inside or outside weld may be deposited first. If method b, c, d, or e is applied, the inside weld shall be deposited first:

a) magnetic particle;

b) applying a solvent liquid penetrant to the weld and then applying a developer to the gap between the shell and the bottom and examining for leaks after a minimum dwell time of one hour;

c) applying a water-soluble liquid penetrant to either side of the joint and then applying a developer to the other side of the joint and examining for leaks after a minimum dwell time of one hour;

d) applying a high flash-point penetrating oil such as light diesel to the gap between the shell and the bottom, letting stand for at least four hours, and examining the weld for evidence of wicking.

NOTE Residual oil may remain on the surfaces yet to be welded even after the cleaning required below and contamination of the subsequent weld is possible.

e) Applying a bubble-forming solution to the weld, using a right angle vacuum box, and examining for bubbles.

Thoroughly clean all residual examination materials from the as yet to be welded surfaces and from the unwelded gap between the shell and bottom. Remove defective weld segments and reweld as required. Reexamine the repaired welds and a minimum of 150 mm (6 in.) to either side in the manner described above. Repeat this clean-remove-repair-examine-and-clean process until there is no evidence of leaking. Complete all welding passes of the joint both inside and outside the shell. Visually examine the finished weld surfaces of the joint both inside and outside the shell for their entire circumference.

7.2.4.2 As an alternative to 7.2.4.1, the initial weld passes, inside and outside of the shell, shall have all slag and non-metals removed from the surface of the welds and the welds shall be examined visually. Additionally, after the completion of the inside and outside fillet or partial penetration welds, the welds may be tested by pressurizing the volume between the inside and outside welds with air pressure to 100 kPa (15 lbf/in.^{2} gauge) and applying a solution film to both welds. To assure that the air pressure reaches all parts of the welds, a sealed blockage in the annular passage between the inside and outside welds must be provided by welding at one or more points. Additionally, a small pipe coupling communicating with the volume between the welds must be connected at one end and a pressure gauge connected to a coupling on the other end of the segment under test.

• **7.2.4.3** By agreement between the Purchaser and the Manufacturer, the examinations of 7.2.4.1 may be waived if the following examinations are performed on the entire circumference of the weld(s).

a) Visually examine the initial weld pass (inside or outside).

b) Visually examine the finished joint welded surfaces, both inside and outside the shell.

c) Examine either side of the finished joint weld surfaces by magnetic particle, or liquid penetrant, or right angle vacuum box.

7.2.5 Roofs

Except for the stipulation that the structural framing (such as the rafters and girders) of the roof must be reasonably true to line and surface, this standard does not include special stipulations for erection of the roof.

7.3 Examination, Inspection, and Repairs

7.3.1 General

7.3.1.1 The Purchaser's inspector shall at all times have free entry to all parts of the job while work under the contract is being performed. The Manufacturer shall afford the Purchaser's inspector reasonable facilities to assure the inspector that the work is being performed in accordance with this standard.

7.3.1.2 Any material or workmanship shall be subject to the replacement requirements of 6.2.3.

• **7.3.1.3** Material that is damaged by defective workmanship or that is otherwise defective will be rejected. The Manufacturer will be notified of this in writing and will be required to furnish new material promptly or to correct defective workmanship.

7.3.1.4 Before acceptance, all work shall be completed to the satisfaction of the Purchaser's inspector, and the entire tank, when filled with oil, shall be tight and free from leaks.

7.3.2 Examination of Welds

• **7.3.2.1 Butt-Welds**

Complete penetration and complete fusion are required for welds joining shell plates to shell plates. Examination for the quality of the welds shall be made using either the radiographic method specified in 8.1 or alternatively, by agreement between the Purchaser and the Manufacturer, using the ultrasonic method specified in 8.3.1 (see Annex U). In addition to the radiographic or ultrasonic examination, these welds shall also be visually examined. Furthermore, the Purchaser's inspector may visually examine all butt-welds for cracks, arc strikes, excessive undercut, surface porosity, incomplete fusion, and other defects. Acceptance and repair criteria for the visual method are specified in 8.5.

7.3.2.2 Fillet Welds

Fillet welds shall be examined by the visual method. The final weld shall be cleaned of slag and other deposits prior to examination. Visual examination acceptance and repair criteria are specified in 8.5.

7.3.2.3 Responsibility

The Manufacturer shall be responsible for making radiographs and any necessary repairs; however, if the Purchaser's inspector requires radiographs in excess of the number specified in Section 6, or requires chip-outs of fillet welds in excess of one per 30 m (100 ft) of weld and no defect is disclosed the additional examinations and associated work shall be the responsibility of the Purchaser.

7.3.3 Examination and Testing of the Tank Bottom

Upon completion of welding of the tank bottom, the bottom welds and plates shall be examined visually for any potential defects and leaks. Particular attention shall apply to areas such as sumps, dents, gouges, three-plate laps, bottom plate breakdowns, arc strikes, temporary attachment removal areas, and welding lead arc burns. Visual examination acceptance and repair criteria are specified in 8.5. In addition, all welds shall be tested by one of the following methods.

a) A vacuum-box test in accordance with 8.6.

b) A tracer gas test in accordance with 8.6.11.

c) After at least the lowest shell course has been attached to the bottom, water (to be supplied by the Purchaser) shall be pumped underneath the bottom. A head of 150 mm (6 in.) of liquid shall be maintained using a temporary dam to hold that depth around the edge of the bottom. The line containing water for testing may be installed temporarily by running it through a manhole to one or more temporary flange connections in the bottom of the tank, or the line may be installed permanently in the subgrade beneath the tank. The method of installation should be governed by the nature of the subgrade. Reasonable care shall be taken to preserve the prepared subgrade under the tank.

7.3.4 Inspection of Reinforcing-Plate Welds

After fabrication is completed but before the tank is filled with test water, the reinforcing plates shall be tested by the Manufacturer by applying up to 100 kPa (15 lbf/in.^{2}) gauge pneumatic pressure between the tank shell and the reinforcement plate on each opening using the telltale hole specified in 5.7.5.1. While each space is subjected to such pressure, a soap film, linseed oil, or another material suitable for the detection of leaks shall be applied to all attachment welding around the reinforcement, both inside and outside the tank.

7.3.5 Testing of the Shell

After the entire tank and roof structure is completed, the shell (except for the shell of tanks designed in accordance with Annex F) shall be tested by one of the following methods, as specified on the Data Sheet, Line 14.

1) If water is available for testing the shell, the tank shall be filled with water as follows: (1) to the maximum design liquid level, H; (2) for a tank with a tight roof, to 50 mm (2 in.) above the weld connecting the roof plate or compression bar to the top angle or shell; (3) to a level lower than that specified in Subitem 1 or 2 when restricted by overflows, an internal floating roof, or other freeboard by agreement between the Purchaser and the Manufacturer, or 4) to a level of seawater producing a bottom of shell hoop stress equal to that produced by a full-height fresh water test. The tank shall be inspected frequently during the filling operation, and any welded joints above the test-water level shall be examined in accordance with Item 2 below. This test shall be conducted before permanent external piping is connected to the tank. Attachments to the shell defined in 5.8.1.1, located at least 1 m (3 ft) above the water level, and roof appurtenances may be welded during the filling of the tank. After completion of the hydro-test, only non-structural small attachments may be welded to the tank in accordance with 7.2.1.11.

2) If sufficient water to fill the tank is not available, the tank may be tested by (1) painting all of the joints on the inside with a highly penetrating oil, such as automobile spring oil, and carefully examining the outside of the joints for leakage; (2) applying vacuum to either side of the joints or applying internal air pressure as specified for the roof test in 7.3.7 and carefully examining the joints for leakage; or (3) using any combination of the methods stipulated in 7.3.5, Subitems 1 and 2.

7.3.6 Hydrostatic Testing Requirements

7.3.6.1 This hydrostatic test of the tank shall be conducted before permanent external piping is connected to the tank. Attachments to the shell defined in 5.8.1.1, located at least 1 m (3 ft) above the water level, and roof appurtenances may be welded during the filling of the tank. After completion of the hydro-test, only non-structural small attachments may be welded to the tank in accordance with 7.2.1.12. Any welded joints above the test-water level shall be examined for leakage by one of the following methods:

1) applying a highly penetrating oil on all interior weld joints, e.g. automobile spring oil, and carefully examining the outside of the joints for leakage;

2) applying vacuum to either side of the joints or applying internal air pressure as specified for the roof test in 7.3.7 and carefully examining the joints for leakage; or

3) using any combination of the methods stipulated in Subitems 1 and 2.

7.3.6.2 The Manufacturer shall be responsible for the following.

1) Preparing the tank for testing. This shall include removal of all trash, debris, grease, oil, weld scale, weld spatter, and any other foreign matter from the interior and the roof(s) of the tank.

• 2) Furnishing, laying, and removing all lines from the water source tie-in location and to the water disposal point as prescribed on the Data Sheet, Line 14.

• 3) Filling and emptying the tank. (See 1.3 for Purchaser responsibility to obtain any required permits for disposal of water.)

• 4) Cleaning, rinsing, drying, or other prescribed activity, if specified on Data Sheet, Line 14, following the hydro-test to make the tank ready for operation.

• 5) Taking settlement measurements (unless explicitly waived by the Purchaser on the Data Sheet, Line 14).

6) Furnishing all other test materials and facilities, including blinds, bolting, and gaskets (see 4.9).

• 7) Checking the wind girders for proper drainage during or following the hydro-test. If water is retained, additional drainage shall be provided subject to the Purchaser's approval.

• **7.3.6.3** The Purchaser shall be responsible for the following.

1) Furnishing and disposing of the water for hydro-testing the tank from the water source tie-in location as designated on the Data Sheet, Line 14. If biocide or caustic additions are specified to the Manufacturer, the Purchaser is responsible for determining or identifying disposal restrictions on the treated water.

2) Specifying the test water quality. Potable water is preferred for hydro-testing. This does not preclude the use of condensate, reverse osmosis water, well water, river water, or sea water. The Purchaser shall consider issues such as low temperature brittle fracture, freeze damage, amount of suspended solids, sanitation issues, animal/plant incubation and/or growth, acidity, general corrosion, pitting, protecting against cathodic cells, microbiologically-induced corrosion, material dependent sensitivity to trace chemical attack, disposal, rinsing,

and residuals left in the tank after emptying. If the Purchaser-supplied test water causes corrosion, the Purchaser is responsible for the required repairs.

3) For the following metallurgies, describe on the Data Sheet, Line 14, (using a Supplemental Specification) any additional restrictions on the water quality.

a) Carbon Steel—For carbon steel equipment where water contact exceeds 14 days, including filling and draining (e.g. consider adding an oxygen scavenger and a biocide, and raise the pH by the addition of caustic).

b) Stainless Steel—See Annex S.

c) Aluminum Components—See Annex H.

7.3.6.4 For carbon and low-alloy steel tanks, the tank metal temperature during hydrostatic testing shall not be colder than the design metal temperature per Figure 4.1, as long as the water is prevented from freezing. The Manufacturer is responsible for heating the test water, if heating is required, unless stated otherwise on the Data Sheet, Line 14.

• **7.3.6.5** The minimum fill and discharge rate, if any, shall be specified by the Purchaser on the Data Sheet, Line 23. When settlement measurements are specified by the Purchaser, the maximum filling rates shall be as follows, unless otherwise restricted by the requirements in 5.8.5.

Water Filling Rate

Bottom Course Thickness	Tank Portion	Maximum Filling Rate
Less than 22 mm ($^{7}/_{8}$ in.)	– Top course	300 mm (12 in.)/hr
	– Below top course	460 mm (18 in.)/hr
22 mm ($^{7}/_{8}$ in.) and thicker	– Top third of tank	230 mm (9 in.)/hr
	– Middle third of tank	300 (12 in.)/hr
	– Bottom third of tank	460 (18 in.)/hr

Filling may continue while elevation measurements are being made as long as the change in water elevation for a set of readings does not exceed 300 mm (12 in.). Unless waived on the Data Sheet, the Manufacturer shall make shell elevation measurements in accordance with the following.

a) Shell elevation measurements shall be made at equally-spaced intervals around the tank circumference not exceeding 10 m (32 ft). The minimum number of shell measurement points shall be eight.

b) Observed elevations shall be referred to a permanent benchmark. The level instrument shall be set up at least $1^{1}/_{2}$ times tank diameter away from the tank when tank elevation readings are taken. Six sets of settlement readings are required:

1) Before start of the hydrostatic test;

2) With tank filled to $^{1}/_{4}$ test height (±600 mm [2 ft]);

3) With tank filled to $^{1}/_{2}$ test height (±600 mm [2 ft]);

4) With tank filled to $^{3}/_{4}$ test height (±600 mm [2 ft]);

5) At least 24 hours after the tank has been filled to the maximum test height. This 24-hour period may be increased to duration specified on the data sheet if the Purchaser so requires for conditions such as:

   i. The tank is the first one in the area,

   ii. The tank has a larger capacity than any other existing tank in the area,

   iii. The tank has a higher unit bearing load than any other existing tank in the area,

   iv. There is a question regarding the rate or magnitude of settlement that will take place;

6) After tank has been emptied of test water.

NOTE The three sets of settlement readings described in paragraphs 2, 3, and 4 above may be omitted if specified by the Purchaser.

7.3.6.6 If settlement measurements are specified by the Purchaser, any differential settlement greater than 13 mm per 10 m ($^1/_2$ in. per 32 ft) of circumference or a uniform settlement over 50 mm (2 in.) shall be reported to the Purchaser for evaluation. Filling of the tank shall be stopped until cleared by the Purchaser.

7.3.6.7 For floating-roof tanks, the maximum and minimum annular space between the shell and the roof rim plate prior to initial flotation and at the maximum test fill height shall be measured and recorded.

7.3.6.8 Internal bottom elevation measurements shall be made before and after hydrostatic testing. Measurements shall be made at maximum intervals of 3 m (10 ft) measured on diametrical lines across the tank. The diametrical lines shall be spaced at equal angles, with a maximum separation measured at the tank circumference of 10 m (32 ft). A minimum of four diametrical lines shall be used.

7.3.6.9 All elevation measurements shall be included in the Manufacturer's Post-Construction Document Package (see W.1.5).

7.3.7 Testing of the Roof

7.3.7.1 Upon completion, the roof of a tank designed to be gas-tight (except for roofs designed under 7.3.7.2, F.4.4, and F.7.6) shall be tested by one of the following methods.

a) Applying internal air pressure not exceeding the weight of the roof plates and applying to the weld joints a bubble solution or other material suitable for the detection of leaks.

b) Vacuum testing the weld joints in accordance with 8.6 to detect any leaks.

7.3.7.2 Upon completion, the roof of a tank not designed to be gas-tight, such as a tank with peripheral circulation vents or a tank with free or open vents, shall receive only visual examination of its weld joints, unless otherwise specified by the Purchaser.

7.4 Repairs to Welds

7.4.1 All defects found in welds shall be called to the attention of the Purchaser's inspector, and the inspector's approval shall be obtained before the defects are repaired. All completed repairs shall be subject to the approval of the Purchaser's inspector. Acceptance criteria are specified in 8.2, 8.4, and 8.5, as applicable.

7.4.2 Pinhole leaks or porosity in a tank bottom joint may be repaired by applying an additional weld bead over the defective area. Other defects or cracks in tank bottom or tank roof (including floating roofs in Annex C) joints shall be repaired as required by 8.1.7. Mechanical caulking is not permitted.

7.4.3 All defects, cracks, or leaks in shell joints or the shell-to-bottom joint shall be repaired in accordance with 8.1.7.

7.4.4 Repairs of defects discovered after the tank has been filled with water for testing shall be made with the water level at least 0.3 m (1 ft) below any point being repaired or, if repairs have to be made on or near the tank bottom, with the tank empty. Welding shall not be done on any tank unless all connecting lines have been completely blinded. Repairs shall not be attempted on a tank that is filled with oil or that has contained oil until the tank has been emptied, cleaned, and gas freed. Repairs on a tank that has contained oil shall not be attempted by the Manufacturer unless the manner of repair has been approved in writing by the Purchaser and the repairs are made in the presence of the Purchaser's inspector.

7.5 Dimensional Tolerances

7.5.1 General

The purpose of the tolerances given in 7.5.2 through 7.5.7 is to produce a tank of acceptable appearance and to permit proper functioning of floating roofs. Measurements shall be taken prior to the hydrostatic water test. Unless waived or modified by the Purchaser on Data Sheet, Line 15, or established separately by agreement between the Purchaser and the Manufacturer, the following tolerances apply.

7.5.2 Plumbness

a) The maximum out-of-plumbness of the top of the shell relative to the bottom of the shell shall not exceed $^1/_{200}$ of the total tank height. The out-of-plumbness in one shell course shall not exceed the permissible variations for flatness and waviness as specified in ASTM A6M/A6, ASTM A20M/A20, or ASTM A480M/A480, whichever is applicable.

b) The maximum out-of-plumbness of roof columns, guide poles, or other vertical internal components shall not exceed $^1/_{200}$ of the total height. The 1/200 criteria shall also apply to fixed roof columns. For tanks with internal floating roofs, apply the criteria of this section or Annex H, whichever is more stringent.

7.5.3 Roundness

Radii measured at 0.3 m (1 ft) above the bottom corner weld shall not exceed the following tolerances:

Tank Diameter m (ft)	Radius Tolerance mm (in.)
< 12 (40)	± 13 ($^1/_2$)
From 12 (40) to < 45 (150)	± 19 ($^3/_4$)
From 45 (150) to < 75 (250)	± 25 (1)
≥ 75 (250)	± 32 ($1^1/_4$)

7.5.4 Local Deviations

Local deviations from the theoretical shape (for example, weld discontinuities and flat spots) shall be limited as follows.

a) Deviations (peaking) at vertical weld joints shall not exceed 13 mm ($^1/_2$ in.). Peaking at vertical weld joints shall be determined using a horizontal sweep board 900 mm (36 in.) long. The sweep board shall be made to the nominal radius of the tank.

b) Deviations (banding) at horizontal weld joints shall not exceed 13 mm ($^1/_2$ in.). Banding at horizontal weld joints shall be determined using a straight edge vertical sweep board 900 mm (36 in.) long.

c) Flat spots measured in the vertical plane shall not exceed the appropriate plate flatness and waviness requirements given in 7.5.2.

7.5.5 Foundations

7.5.5.1 To achieve the tolerances specified in 7.5.2, 7.5.3, and 7.5.4, it is essential that a foundation true to the plane be provided for the tank erection. The foundation should have adequate bearing to maintain the trueness of the foundation (see Annex B).

7.5.5.2 Where foundations true to a horizontal plane are specified, tolerances shall be as follows.

a) Where a concrete ringwall is provided under the shell, the top of the ringwall shall be level within ±3 mm ($^1/_8$ in.) in any 9 m (30 ft) of the circumference and within ±6 mm ($^1/_4$ in.) in the total circumference measured from the average elevation.

b) Where a concrete ringwall is not provided, the foundation under the shell shall be level within ±3 mm ($^1/_8$ in.) in any 3 m (10 ft) of the circumference and within ±13 mm ($^1/_2$ in.) in the total circumference measured from the average elevation.

c) Where a concrete slab foundation is provided, the first 0.3 m (1 ft) of the foundation (or width of the annular ring), measured from the outside of the tank radially towards the center, shall comply with the concrete ringwall requirement. The remainder of the foundation shall be within ±13 mm ($^1/_2$ in.) of the design shape.

7.5.5.3 Where a sloping foundation is specified, elevation differences about the circumference shall be calculated from the specified high point. Actual elevation differences about the circumference shall be determined from the actual elevation of the specified high point. The actual elevation differences shall not deviate from the calculated differences by more than the following tolerances.

a) Where a concrete ringwall is provided, ±3 mm ($^1/_8$ in.) in any 9 m (30 ft) of circumference and ±6 mm ($^1/_4$ in.) in the total circumference.

b) Where a concrete ringwall is not provided, ±3 mm ($^1/_8$ in.) in any 3 m (10 ft) of circumference and ±13 mm ($^1/_2$ in.) in the total circumference.

7.5.6 Nozzles

Nozzles (excluding manholes) shall be installed within the following tolerances:

a) specified projection from outside of tank shell to extreme face of flange: ±5 mm ($^3/_{16}$ in.);

b) elevation of shell nozzle or radial location of a roof nozzle: ±6 mm ($^1/_4$ in.);

c) flange tilt in any plane, measured on the flange face:

   ±$^1/_2$ degree for nozzles greater than NPS 12 in. nominal diameter,

   ±3 mm ($^1/_8$ in.) at the outside flange diameter for nozzles NPS 12 and smaller;

d) flange bolt hole orientation: ±3 mm ($^1/_8$ in.).

7.5.7 Shell Manholes

Manholes shall be installed within the following tolerances:

a) specified projection from outside of shell to extreme face of flange, ±13 mm ($^1/_2$ in.)

b) elevation and angular location, ±13 mm ($^1/_2$ in.)

c) flange tilt in any plane, measured across the flange diameter, ±13 mm ($^1/_2$ in.)

SECTION 8—METHODS OF EXAMINING JOINTS

NOTE In this standard, the term inspector, as used in Sections V and VIII of the ASME *Code*, shall be interpreted to mean the Purchaser's inspector.

8.1 Radiographic Method

For the purposes of this paragraph, plates shall be considered of the same thickness when the difference in their specified or design thickness does not exceed 3 mm ($^1/_8$ in.).

8.1.1 Application

Radiographic examination is required for shell butt-welds (see 8.1.2.2, 8.1.2.3, and 8.1.2.4), annular-plate butt-welds (see 8.1.2.9), and flush-type connections with butt-welds (see 5.7.8.11). Radiographic examination is not required for the following: roof-plate welds, bottom-plate welds, welds joining the top angle to either the roof or shell, welds joining the shell plate to the bottom plate, welds in nozzle and manway necks made from plate, or appurtenance welds to the tank.

8.1.2 Number and Location of Radiographs

8.1.2.1 Except when omitted under the provisions of A.3.4, radiographs shall be taken as specified in 8.1.2 through 8.1.9.

8.1.2.2 The following requirements apply to vertical joints.

a) For butt-welded joints in which the thinner shell plate is less than or equal to 10 mm ($^3/_8$ in.) thick, one spot radiograph shall be taken in the first 3 m (10 ft) of completed vertical joint of each type and thickness welded by each welder or welding operator. The spot radiographs taken in the vertical joints of the lowest course may be used to meet the requirements of Note 3 in Figure 8.1 for individual joints. Thereafter, without regard to the number of welders or welding operators, one additional spot radiograph shall be taken in each additional 30 m (100 ft) (approximately) and any remaining major fraction of vertical joint of the same type and thickness. At least 25 % of the selected spots shall be at junctions of vertical and horizontal joints, with a minimum of two such intersections per tank. In addition to the foregoing requirements, one random spot radiograph shall be taken in each vertical joint in the lowest course (see the top panel of Figure 8.1).

b) For butt-welded joints in which the thinner shell plate is greater than 10 mm ($^3/_8$ in.) but less than or equal to 25 mm (1 in.) in thickness, spot radiographs shall be taken according to Item a. In addition, all junctions of vertical and horizontal joints in plates in this thickness range shall be radiographed; each film shall clearly show not less than 75 mm (3 in.) of vertical weld and 50 mm (2 in.) of weld length on each side of the vertical intersection. In the lowest course, two spot radiographs shall be taken in each vertical joint: one of the radiographs shall be as close to the bottom as is practicable, and the other shall be taken at random (see the center panel of Figure 8.1).

c) Vertical joints in which the shell plates are greater than 25 mm (1 in.) thick shall be fully radiographed. All junctions of vertical and horizontal joints in this thickness range shall be radiographed; each film shall clearly show not less than 75 mm (3 in.) of vertical weld and 50 mm (2 in.) of weld length on each side of the vertical intersection (see the bottom panel of Figure 8.1).

d) The butt-weld around the periphery of an insert plate that extends less than the adjacent shell course height and that contains shell openings (i.e. nozzle, manway, flush-type cleanout, flush type shell-connection) and their reinforcing elements shall be completely radiographed.

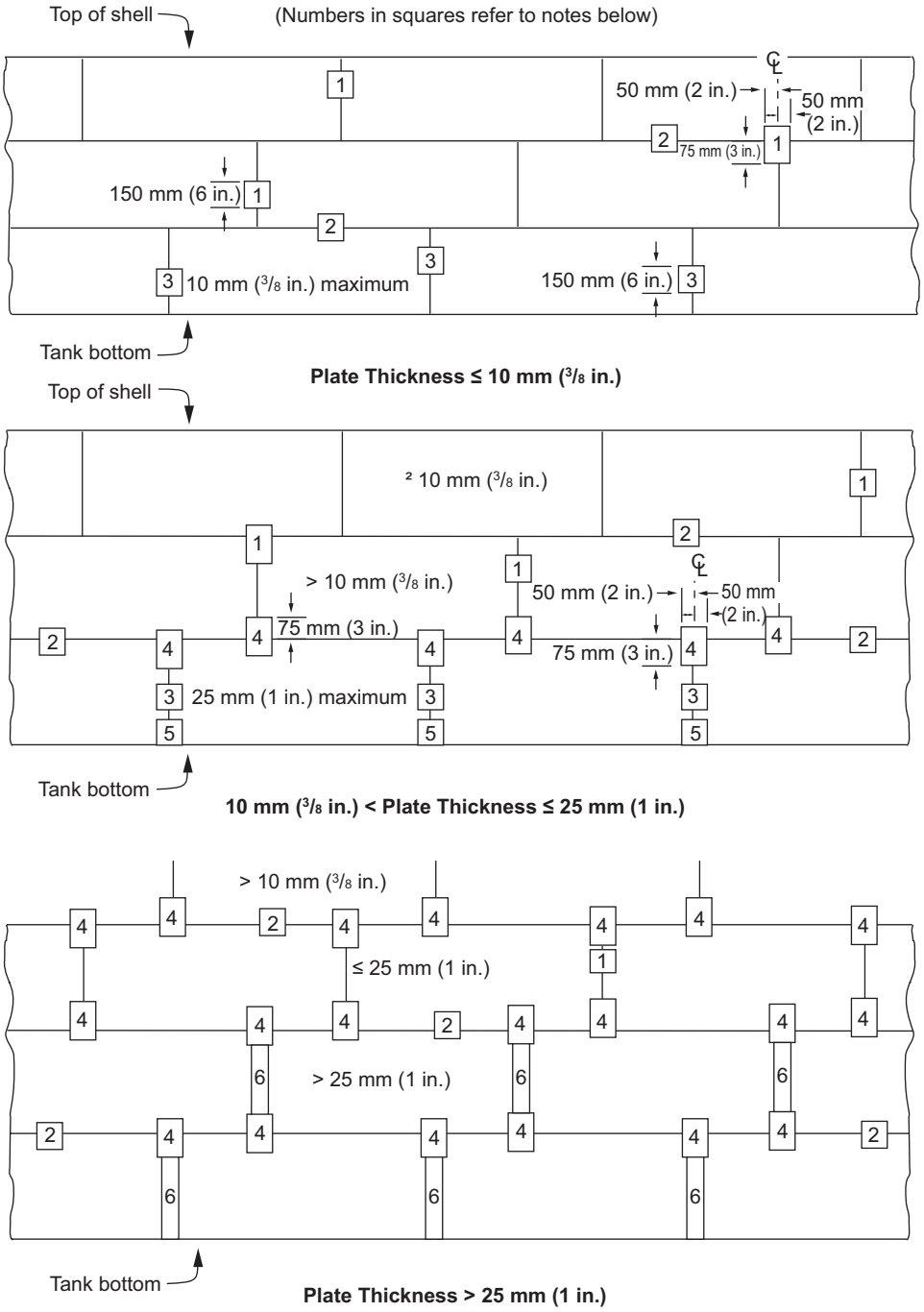

Notes:

1. Vertical spot radiograph in accordance with 8.1.2.2, Item a: one in the first 3 m (10 ft) and one in each 30 m (100 ft) thereafter, 25 % of which shall be at intersections.
2. Horizontal spot radiograph in accordance with 8.1.2.3: one in the first 3 m (10 ft) and one in each 60 m (200 ft) thereafter.
3. Vertical spot radiograph in each vertical seam in the lowest course (see 8.1.2.2, Item b). Spot radiographs that satisfy the requirements of Note 1 for the lowest course may be used to satisfy this requirement.
4. Spot radiographs of all intersections over 10 mm (3/8 in.) (see 8.1.2.2, Item b).
5. Spot radiograph of bottom of each vertical seam in lowest shell course over 10 mm (3/8 in.) (see 8.1.2.2, Item b).
6. Complete radiograph of each vertical seam over 25 mm (1 in.). The complete radiograph may include the spot radiographs of the intersections if the film has a minimum width of 100 mm (4 in.) (see 8.1.2.2, Item c).

Figure 8.1—Radiographic Requirements for Tank Shells

e) The butt-weld around the periphery of an insert plate which extends to match the adjacent shell course height shall have the vertical and the horizontal butt joints and the intersections of vertical and horizontal weld joints radiographed using the same rules that apply to the weld joints in adjacent shell plates in the same shell course.

8.1.2.3 One spot radiograph shall be taken in the first 3 m (10 ft) of completed horizontal butt joint of the same type and thickness (based on the thickness of the thinner plate at the joint) without regard to the number of welders or welding operators. Thereafter, one radiograph shall be taken in each additional 60 m (200 ft) (approximately) and any remaining major fraction of horizontal joint of the same type and thickness. These radiographs are in addition to the radiographs of junctions of vertical joints required by Item c of 8.1.2.2 (see Figure 8.1).

8.1.2.4 The number of spot radiographs required herein shall be applicable on a per tank basis, irrespective of the number of tanks being erected concurrently or continuously at any location.

8.1.2.5 It is recognized that in many cases the same welder or welding operator does not weld both sides of a butt joint. If two welders or welding operators weld opposite sides of a butt joint it is permissible to examine their work with one spot radiograph. If the radiograph is rejected, additional spot radiographs shall be taken to determine whether one or both of the welders or welding operators are at fault.

8.1.2.6 An equal number of spot radiographs shall be taken from the work of each welder or welding operator in proportion to the length of joints welded.

8.1.2.7 As welding progresses, radiographs shall be taken as soon as it is practicable. The locations where spot radiographs are to be taken may be determined by the Purchaser's inspector.

8.1.2.8 Each radiograph shall clearly show a minimum of 150 mm (6 in.) of weld length. The film shall be centered on the weld and shall be of sufficient width to permit adequate space for the location of identification marks and an image quality indicator (IQI) penetrometer

8.1.2.9 When bottom annular plates are required by 5.5.1, or by M.4.1, the radial joints shall be radiographed as follows: (a) For double-welded butt joints, one spot radiograph shall be taken on 10 % of the radial joints; (b) For single-welded butt joints with permanent or removable back-up bar, one spot radiograph shall be taken on 50 % of the radial joints. Extra care must be exercised in the interpretation of radiographs of single-welded joints that have a permanent back-up bar. In some cases, additional exposures taken at an angle may determine whether questionable indications are acceptable. The minimum radiographic length of each radial joint shall be 150 mm (6 in.). Locations of radiographs shall preferably be at the outer edge of the joint where the shell plate and annular plate join.

8.1.3 Technique

8.1.3.1 Except as modified in this section, the radiographic examination method employed shall be in accordance with Section V, Article 2, of the ASME *Code*.

8.1.3.2 Personnel who perform and evaluate radiographic examinations according to this section shall be qualified and certified by the Manufacturer as meeting the requirements of certification as generally outlined in Level II or Level III of ASNT SNT-TC-1A (including applicable supplements). Level-I personnel may be used if they are given written acceptance/rejection procedures prepared by Level-II or Level-III personnel. These written procedures shall contain the applicable requirements of Section V, Article 2, of the ASME *Code*. In addition, all Level-I personnel shall be under the direct supervision of Level-II or Level-III personnel.

8.1.3.3 The requirements of T-285 in Section V, Article 2, of the ASME *Code* are to be used only as a guide. Final acceptance of radiographs shall be based on whether the prescribed pen et ramet er image and the specified hole can be seen.

8.1.3.4 The finished surface of the weld reinforcement at the location of the radiograph shall either be flush with the plate or have a reasonably uniform crown not to exceed the following values:

Plate Thickness mm (in.)	Maximum Thickness of Reinforcement mm (in.)
≤ 13 ($^1/_2$)	1.5 ($^1/_{16}$)
> 13 ($^1/_2$) to 25 (1)	2.5 ($^3/_{32}$)
> 25 (1)	3 ($^1/_8$)

8.1.4 Submission of Radiographs

Before any welds are repaired, the radiographs shall be submitted to the inspector with any information requested by the inspector regarding the radiographic technique used.

8.1.5 Radiographic Standards

Welds examined by radiography shall be judged as acceptable or unacceptable by the standards of Paragraph UW-51(b) in Section VIII of the ASME *Code*.

8.1.6 Determination of Limits of Defective Welding

When a section of weld is shown by a radiograph to be unacceptable under the provisions of 8.1.5 or the limits of the deficient welding are not defined by the radiograph, two spots adjacent to the section shall be examined by radiography; however, if the original radiograph shows at least 75 mm (3 in.) of acceptable weld between the defect and any one edge of the film, an additional radiograph need not be taken of the weld on that side of the defect. If the weld at either of the adjacent sections fails to comply with the requirements of 8.1.5, additional spots shall be examined until the limits of unacceptable welding are determined, or the erector may replace all of the welding performed by the welder or welding operator on that joint. If the welding is replaced, the inspector shall have the option of requiring that one radiograph be taken at any selected location on any other joint on which the same welder or welding operator has welded. If any of these additional spots fail to comply with the requirements of 8.1.5, the limits of unacceptable welding shall be determined as specified for the initial section.

8.1.7 Repair of Defective Welds

8.1.7.1 Defects in welds shall be repaired by chipping or melting out the defects from one side or both sides of the joint, as required, and rewelding. Only the cutting out of defective joints that is necessary to correct the defects is required.

8.1.7.2 All repaired welds in joints shall be checked by repeating the original examination procedure and by repeating one of the testing methods of 7.3, subject to the approval of the Purchaser.

8.1.8 Record of Radiographic Examination

8.1.8.1 The Manufacturer shall prepare a radiograph map showing the final location of all radiographs taken along with the film identification marks.

8.1.8.2 After the structure is completed, the films shall be the property of the Purchaser unless otherwise agreed upon by the Purchaser and the Manufacturer.

8.2 Magnetic Particle Examination

8.2.1 When magnetic particle examination is specified, the method of examination shall be in accordance with Section V, Article 7, of the ASME *Code*.

8.2.2 Magnetic particle examination shall be performed in accordance with a written procedure that is certified by the Manufacturer to be in compliance with the applicable requirements of Section V of the ASME *Code*.

8.2.3 The Manufacturer shall determine that each magnetic particle examiner meets the following requirements.

a) Has vision (with correction, if necessary) to be able to read a Jaeger Type 2 standard chart at a distance of not less than 300 mm (12 in.) and is capable of distinguishing and differentiating contrast between the colors used. Examiners shall be checked annually to ensure that they meet these requirements.

b) Is competent in the technique of the magnetic particle examination method, including performing the examination and interpreting and evaluating the results; however, where the examination method consists of more than one operation, the examiner need only be qualified for one or more of the operations.

8.2.4 Acceptance standards and the removal and repair of defects shall be in accordance with Section VIII, Annex 6, Paragraphs 6-3, 6-4, and 6-5, of the ASME *Code*.

8.3 Ultrasonic Examination

8.3.1 Ultrasonic Examination in Lieu of Radiography

When ultrasonic examination is applied in order to fulfill the requirement of 7.3.2.1, the provisions of Annex U shall apply.

8.3.2 Ultrasonic Examination NOT in Lieu of Radiography

8.3.2.1 When the radiographic method is applied in order to fulfill the requirement of 7.3.2.1, then any ultrasonic examination specified shall be in accordance with this section.

8.3.2.2 The method of examination shall be in accordance with Section V, Article 4, of the ASME *Code*.

8.3.2.3 Ultrasonic examination shall be performed in accordance with a written procedure that is certified by the Manufacturer to be in compliance with the applicable requirements of Section V of the ASME *Code*.

8.3.2.4 Examiners who perform ultrasonic examinations under this section shall be qualified and certified by the Manufacturers as meeting the requirements of certification as generally outlined in Level II or Level III of ASNT SNT-TC-1A (including applicable supplements). Level-I personnel may be used if they are given written acceptance/rejection criteria prepared by Level-II or Level-III personnel. In addition, all Level-I personnel shall be under the direct supervision of Level-II or Level-III personnel.

• **8.3.2.5** Acceptance standards shall be agreed upon by the Purchaser and the Manufacturer.

8.4 Liquid Penetrant Examination

8.4.1 When liquid penetrant examination is specified, the method of examination shall be in accordance with Section V, Article 6, of the ASME *Code*.

8.4.2 Liquid penetrant examination shall be performed in accordance with a written procedure that is certified by the Manufacturer to be in compliance with the applicable requirements of Section V of the ASME *Code*.

8.4.3 The Manufacturer shall determine and certify that each liquid penetrant examiner meets the following requirements.

a) Has vision (with correction, if necessary) to enable him to read a Jaeger Type 2 standard chart at a distance of not less than 300 mm (12 in.) and is capable of distinguishing and differentiating contrast between the colors used. Examiners shall be checked annually to ensure that they meet these requirements.

b) Is competent in the technique of the liquid penetrant examination method for which he is certified, including making the examination and interpreting and evaluating the results; however, where the examination method consists of more than one operation, the examiner may be certified as being qualified for one or more of the operations.

8.4.4 Acceptance standards and the removal and repair of defects shall be in accordance with Section VIII, Annex 8, Paragraphs 8-3, 8-4, and 8-5, of the ASME *Code*.

8.5 Visual Examination

8.5.1 The Manufacturer shall determine and certify that each visual examiner meets the following requirements.

a) Has vision (with correction, if necessary) to be able to read a Jaeger Type 2 standard chart at a distance of not less than 300 mm (12 in.) and is capable of passing a color contrast test. Examiners shall be checked annually to ensure that they meet this requirement; and

b) Is competent in the technique of the visual examination, including performing the examination and interpreting and evaluating the results; however, where the examination method consists of more than one operation, the examiner performing only a portion of the test need only be qualified for the portion that the examiner performs.

8.5.2 A weld shall be acceptable by visual examination if the inspection shows the following.

a) There are no crater cracks, other surface cracks or arc strikes in or adjacent to the welded joints.

b) Maximum permissible undercut is 0.4 mm ($^1/_{64}$ in.) in depth for vertical butt joints, vertically oriented permanent attachments, attachment welds for nozzles, manholes, flush-type openings, and the inside shell-to-bottom welds. For horizontal butt joints, horizontally oriented permanent attachments, and annular-ring butt joints, the maximum permissible undercut is 0.8 mm ($^1/_{32}$ in.) in depth.

c) The frequency of surface porosity in the weld does not exceed one cluster (one or more pores) in any 100 mm (4 in.) of length, and the diameter of each cluster does not exceed 2.5 mm ($^3/_{32}$ in.).

d) The reinforcement of the welds on all butt joints on each side of the plate shall not exceed the following thicknesses:

Plate Thickness mm (in.)	Maximum Reinforcement Thickness mm (in.)	
	Vertical Joints	Horizontal Joints
≤ 13 ($^1/_2$)	2.5 ($^3/_{32}$)	3 ($^1/_8$)
> 13 ($^1/_2$) to 25 (1)	3 ($^1/_8$)	5 ($^3/_{16}$)
> 25 (1)	5 ($^3/_{16}$)	6 ($^1/_4$)

The reinforcement need not be removed except to the extent that it exceeds the maximum acceptable thickness or unless its removal is required by 8.1.3.4 for radiographic examination.

8.5.3 A weld that fails to meet the criteria given in 8.5.1 shall be reworked before hydrostatic testing as follows:

a) Any defects shall be removed by mechanical means or thermal gouging processes. Arc strikes discovered in or adjacent to welded joints shall be repaired by grinding and rewelding as required. Arc strikes repaired by welding shall be ground flush with the plate.

b) Rewelding is required if the resulting thickness is less than the minimum required for design or hydrostatic test conditions. All defects in areas thicker than the minimum shall be feathered to at least a 4:1 taper.

c) The repair weld shall be visually examined for defects.

NOTE 1 Vertical spot radiograph in accordance with 8.1.2.2, Item a: one in the first 3 m (10 ft) and one in each 30 m (100 ft) thereafter, 25 % of which shall be at intersections.

NOTE 2 Horizontal spot radiograph in accordance with 8.1.2.3: one in the first 3 m (10 ft) and one in each 60 m (200 ft) thereafter.

NOTE 3 Vertical spot radiograph in each vertical seam in the lowest course (see 8.1.2.2, Item b). Spot radiographs that satisfy the requirements of Note 1 for the lowest course may be used to satisfy this requirement.

NOTE 4 Spot radiographs of all intersections over 10 mm ($^3/_8$ in.) (see 8.1.2.2, Item b).

NOTE 5 Spot radiograph of bottom of each vertical seam in lowest shell course over 10 mm ($^3/_8$ in.) (see 8.1.2.2, Item b).

NOTE 6 Complete radiograph of each vertical seam over 25 mm (1 in.). The complete radiograph may include the spot radiographs of the intersections if the film has a minimum width of 100 mm (4 in.) (see 8.1.2.2, Item c).

8.6 Vacuum Testing

8.6.1 Vacuum testing is performed using a testing box approximately 150 mm (6 in.) wide by 750 mm (30 in.) long with a clear window in the top, which provides proper visibility to view the area under examination. During testing, illumination shall be adequate for proper evaluation and interpretation of the test. The open bottom shall be sealed against the tank surface by a suitable gasket. Connections, valves, lighting and gauges, as required, shall be provided. A soap film solution or commercial leak detection solution, applicable to the conditions, shall be used.

8.6.2 Vacuum testing shall be performed in accordance with a written procedure prepared by the Manufacturer of the tank. The procedure shall require:

a) performing a visual examination of the bottom and welds prior to performing the vacuum-box test;

b) verifying the condition of the vacuum box and its gasket seals;

c) verifying that there is no quick bubble or spitting response to large leaks; and

d) applying the film solution to a dry area, such that the area is thoroughly wetted and a minimum generation of application bubbles occurs.

• **8.6.3** A partial vacuum of 21 kPa (3 lbf/in.^{2}, 6 in. Hg) to 35 kPa (5 lbf/in.^{2}, 10 in Hg) gauge shall be used for the test. If specified by the Purchaser, a second partial vacuum test of 56 kPa (8 lbf/in.^{2}, 16 in. Hg) to 70 kPa (10 lbf/in.^{2}, 20 in. Hg) shall be performed for the detection of very small leaks.

8.6.4 The Manufacturer shall determine that each vacuum-box operator meets the following requirements:

a) has vision (with correction, if necessary) to be able to read a Jaeger Type 2 standard chart at a distance of not less than 300 mm (12 in.). Operators shall be checked annually to ensure that they meet this requirement; and

b) is competent in the technique of the vacuum-box testing, including performing the examination and interpreting and evaluating the results; however, where the examination method consists of more than one operation, the operator performing only a portion of the test need only be qualified for that portion the operator performs.

8.6.5 The vacuum-box test shall have at least 50 mm (2 in.) overlap of previously viewed surface on each application.

8.6.6 The metal surface temperature limits shall be between 4 °C (40 °F) and 52 °C (125 °F), unless the film solution is proven to work at temperatures outside these limits, either by testing or Manufacturer's recommendations.

8.6.7 A minimum light intensity of 1000 Lux (100 fc) at the point of examination is required during the application of the examination and evaluation for leaks.

8.6.8 The vacuum shall be maintained for the greater of either at least 5 seconds or the time required to view the area under test.

8.6.9 The presence of a through-thickness leak indicated by continuous formation or growth of a bubble(s) or foam, produced by air passing through the thickness, is unacceptable. The presence of a large opening leak, indicated by a quick bursting bubble or spitting response at the initial setting of the vacuum box is unacceptable. Leaks shall be repaired and retested.

• **8.6.10** A record or report of the test including a statement addressing temperature and light intensity shall be completed and furnished to the Purchaser upon request.

• **8.6.11** As an alternate to vacuum-box testing, a suitable tracer gas and compatible detector can be used to test the integrity of welded bottom joints for their entire length. Where tracer gas testing is employed as an alternate to vacuum-box testing, it shall meet the following requirements:

a) Tracer gas testing shall be performed in accordance with a written procedure which has been reviewed and approved by the Purchaser and which shall address as a minimum: the type of equipment used, surface cleanliness, type of tracer gas, test pressure, soil permeability, soil moisture content, satisfactory verification of the extent of tracer gas permeation, and the method or technique to be used including scanning rate and probe standoff distance.

b) The technique shall be capable of detecting leakage of 1×10^{-4} Pa m^3/s (1×10^{-3} std cm^3/s) or smaller.

c) The test system parameters (detector, gas, and system pressure, i.e., level of pressure under bottom) shall be calibrated by placing the appropriate calibrated capillary leak, which will leak at a rate consistent with (b) above, in a temporary or permanent fitting in the tank bottom away from the tracer gas pressurizing point. Alternatively, by agreement between the Purchaser and the Manufacturer, the calibrated leak may be placed in a separate fitting pressurized in accordance with the system parameters.

d) While testing for leaks in the welded bottom joints, system parameters shall be unchanged from those used during calibration.

SECTION 9—WELDING PROCEDURE AND WELDER QUALIFICATIONS

9.1 Definitions

In this standard, terms relating to welding shall be interpreted as defined in Section IX of the ASME *Code*. Additional terms are defined in 9.1.1 and 9.1.2.

9.1.1 An angle joint is a joint between two members that intersect at an angle between 0 degrees (a butt joint) and 90 degrees (a corner joint).

9.1.2 Porosity refers to gas pockets or voids in metal.

9.2 Qualification of Welding Procedures

9.2.1 General Requirements

• **9.2.1.1** The erection Manufacturer and the fabrication Manufacturer if other than the erection Manufacturer, shall prepare welding procedure specifications and shall perform tests documented by procedure qualification records to support the specifications, as required by Section IX of the ASME *Code* and any additional provisions of this standard. If the Manufacturer is part of an organization that has, to the Purchaser's satisfaction, established effective operational control of the qualification of welding procedures and of welder performance for two or more companies of different names, then separate welding procedure qualifications are not required, provided all other requirements of 9.2, 9.3, and Section IX of the ASME *Code* are met. Welding procedures for ladder and platform assemblies, handrails, stairways, and other miscellaneous assemblies, but not their attachments to the tank, shall comply with either AWS D1.1, AWS D1.6, or Section IX of the ASME *Code*, including the use of standard WPSs.

9.2.1.2 The welding procedures used shall produce weldments with the mechanical properties required by the design.

9.2.1.3 Material specifications listed in Section 4 of this standard but not included in Table QW-422 of Section IX of the ASME *Code* shall be considered as P1 material with group numbers assigned as follows according to the minimum tensile strength specified:

a) less than 485 MPa (70 ksi)—Group 1;

b) equal to or greater than 485 MPa (70 ksi) but less than 550 MPa (80 ksi)—Group 2;

c) equal to or greater than 550 MPa (80 ksi)—Group 3.

Separate welding procedures and performance qualifications shall be conducted for A841M/A841 material.

9.2.1.4 Welding variables (including supplementary essential variables when impact tests are required by 9.2.2), as defined by QW-250 of Section IX of the ASME *Code*, shall be used to determine the welding procedure specifications and the procedure qualification records to be instituted. In addition, when impact tests of the heat-affected zone are required, the heat-treated condition of the base material shall be a supplementary essential variable. Plates produced by the controlled-rolled process are not to be considered as having received any heat treatment. If a protective coating has been applied to weld edge preparations, the coating shall be included as an essential variable of the welding procedure specification, as required by 7.2.1.9.

9.2.2 Impact Tests

9.2.2.1 Impact tests for the qualification of welding procedures shall comply with the applicable provisions of 4.2.9 and shall be made at or below the design metal temperature.

9.2.2.2 When impact testing of a material is required by 4.2.9, 4.2.10, or 4.5.4 impact tests of the heat-affected zone shall be made for all machine, automatic, and semiautomatic welding procedures.

9.2.2.3 For all materials to be used at a design metal temperature below 10 °C (50 °F), the qualification of the welding procedure for vertical joints shall include impact tests of the weld metal. If vertical joints are to be made by a machine, automatic, or semiautomatic process, impact tests of the heat-affected zone shall also be made.

9.2.2.4 When the design metal temperature is below –7 °C (20 °F), impact tests of the weld metal shall be made for all procedures used for welding the components listed in 4.2.10.1, for welding attachments to these components, and for fabricating shell nozzles and manholes from pipe and forgings listed in 4.5.

9.2.2.5 Impact tests shall show minimum values for acceptance in accordance with 4.2.9.3 and the following:

a) for P1, Group 1, materials—20 J (15 ft-lbf), average of three specimens;

b) for P1, Group 2, materials—27 J (20 ft-lbf), average of three specimens;

c) for P1, Group 3, materials—34 J (25 ft-lbf), average of three specimens.

For shell plates thicker than 40 mm ($1^1/_2$ in.), these values shall be increased by 7 J (5 ft-lbf) for each 13 mm ($^1/_2$ in.) over 40 mm ($1^1/_2$ in.). Interpolation is permitted.

9.2.2.6 Weld-metal impact specimens shall be taken across the weld with one face substantially parallel to and within 1.5 mm ($^1/_{16}$ in.) of the surface of the material. The notch shall be cut normal to the original material surface and with the weld metal entirely within the fracture zone.

9.2.2.7 Heat-affected-zone impact specimens shall be taken across the weld and as near the surface of the material as is practicable. Each specimen shall be etched to locate the heat-affected zone, and the notch shall be cut approximately normal to the original material surface and with as much heat-affected-zone material as possible included in the fracture zone.

9.2.2.8 Production welding shall conform to the qualified welding procedure, but production-weld test plates need not be made.

9.3 Qualification of Welders

9.3.1 The erection Manufacturer and the fabrication Manufacturer, if other than the erection Manufacturer, shall conduct tests for all welders assigned to manual and semiautomatic welding and all welding operators assigned to machine and automatic welding to demonstrate the welders' and welding operators' ability to make acceptable welds. Tests conducted by one Manufacturer shall not qualify a welder or welding operator to do work for another Manufacturer.

9.3.2 The welders and welding operators who weld pressure parts and join nonpressure parts, such as all permanent and temporary clips and lugs, to pressure parts shall be qualified in accordance with Section IX of the ASME *Code*.

9.3.3 The records of the tests for qualifying welders and welding operators shall include the following.

a) Each welder or welding operator shall be assigned an identifying number, letter, or symbol by the fabrication or erection Manufacturer.

b) The fabrication or erection Manufacturer shall maintain a record of the welders or welding operators employed that shows the date and results of the tests for each welder or operator and the identifying mark assigned to each welder or operator. This record shall be certified by the fabrication or erection Manufacturer and shall be accessible to the inspector.

9.4 Identification of Welded Joints

The welder or welding operator's identification mark shall be hand- or machine-stamped adjacent to and at intervals not exceeding 1 m (3 ft) along the completed welds. In lieu of stamping, a record may be kept that identifies the welder or welding operator employed for each welded joint; these records shall be accessible to the inspector. Roof plate welds and flange-to-nozzle-neck welds do not require welder identification.

SECTION 10—MARKING

10.1 Nameplates

10.1.1 A tank made in accordance with this standard shall be identified by a nameplate similar to that shown in Figure 10.1. The nameplate shall indicate, by means of letters and numerals not less than 4 mm ($^5/_{32}$ in.) high, the following information:

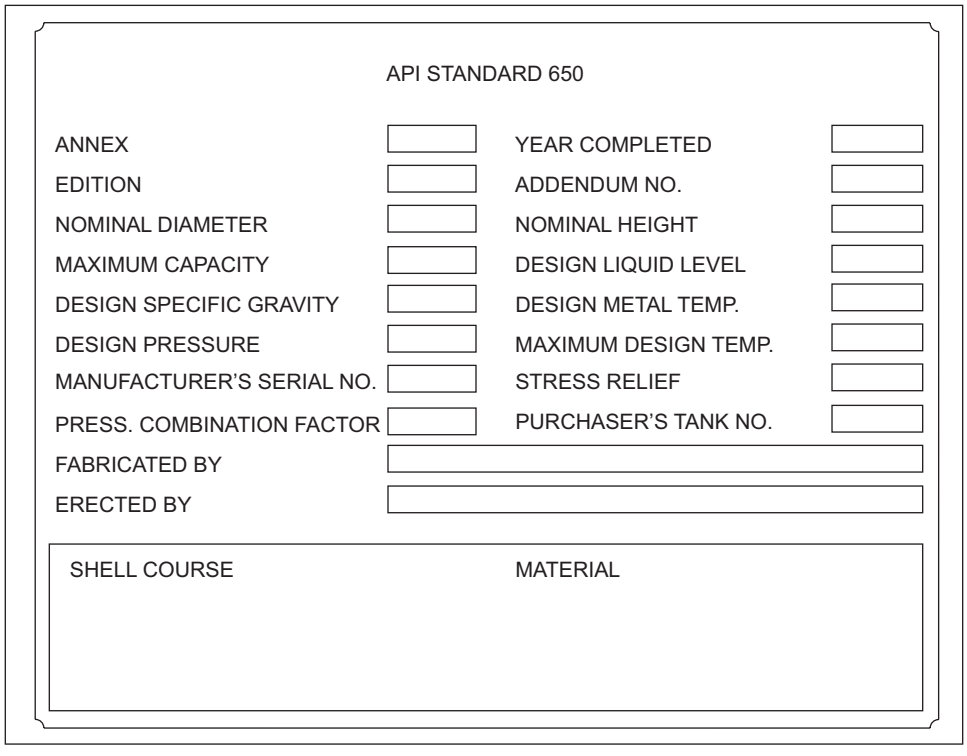

- NOTE At the Purchaser's request, or at the erection Manufacturer's discretion, additional pertinent information may be shown on the nameplate, and the size of the nameplate may be increased proportionately.

Figure 10.1—Manufacturer's Nameplate

a) API Standard 650.

b) The applicable Annex to API Standard 650.

c) The year the tank was completed.

d) The edition and the addendum number of API Standard 650.

- e) The nominal diameter and nominal height, in meters (ft and in.).
- f) The maximum capacity (see 5.2.6.2), in m^3 (42-gallon barrels).
- g) The design liquid level (see 5.6.3.2), in meters (ft and in.).

h) The design specific gravity of the liquid.

i) The design pressure, which shall be shown as “atmospheric” unless Annex F or Annex V applies. If Annex V applies, design pressure shall be shown as a negative number. If both Annex F and Annex V apply, the positive and negative pressures shall be separated by a forward slash and shall be followed by consistent units of measurement.

• j) The design metal temperature as described in 3.4 in °C (°F).

• k) The maximum design temperature, in °C (°F), which shall not exceed 93 °C (200 °F) except in cases where Annex M, S, X, or AL applies.

l) The name of the fabrication Manufacturer if other than the erection Manufacturer. The Manufacturer’s serial number or contract number shall be from the erection Manufacturer.

m) The material specification number for each shell course.

n) When thermal stress-relief is performed to shell openings (nozzles, manholes, flush-type connections, and flush-type cleanout fittings) in accordance with the requirements of 5.7.4, or when applied to an entire tank, the following markings shall be used.

1) Use “SR1” when only flush-type cleanout fittings and flush-type shell connections have been thermally stress-relieved.

2) Use “SR2” when thermal stress-relief has been performed on flush-type cleanout fittings, flush-type shell connections and all shell openings NPS 12 and greater in size in shell plates (or insert plates) of Groups I through IIIA.

3) Use “SR3” when thermal stress-relief has been performed on flush-type cleanout fittings, flush-type shell connections and all shell openings greater than NPS 2 in. size in shell plates (or insert plates) of Groups IV through VI.

4) Use “SR4” when thermal stress-relief has been performed on all flush-type cleanout fittings, flush-type shell connections and all shell openings.

5) Use “SR5” when the completed tank, including all shell openings and attachments, has been thermally stress-relieved as a special requirement by the Purchaser.

6) Use “NONE” when thermal stress-relief has not been performed on any tank appurtenances.

o) The Purchaser’s tank number.

10.1.2 The nameplate shall be attached to the tank shell adjacent to a manhole or to a manhole reinforcing plate immediately above a manhole. A nameplate that is placed directly on the shell plate or reinforcing plate shall be attached by continuous welding or brazing all around the nameplate. A nameplate that is riveted or otherwise permanently attached to an auxiliary plate of ferrous material shall be attached to the tank shell plate or reinforcing plate by continuous welding. The nameplate shall be of corrosion-resistant metal.

10.1.3 When a tank is fabricated and erected by a single organization, that organization’s name shall appear on the nameplate as both fabricator and erector.

10.1.4 When a tank is fabricated by one organization and erected by another, the names of both organizations shall appear on the nameplate, or separate nameplates shall be applied by each.

10.2 Division of Responsibility

Unless otherwise agreed upon, when a tank is fabricated by one Manufacturer and erected by another, the erection Manufacturer shall be considered as having the primary responsibility. The erection Manufacturer shall make certain that the materials used in the fabrication of the components and in the construction of the tank are in accordance with all applicable requirements.

10.3 Certification

The Manufacturer shall certify to the Purchaser, by a letter such as that shown in Figure 10.2, that the tank has been constructed in accordance with the applicable requirements of this standard. An as-built data sheet in accordance with Annex L shall be attached to the certification letter.

• NOTE At the Purchaser's request or at the erection Manufacturer's discretion, additional pertinent information may be shown on the nameplate, and the size of the nameplate may be increased proportionately.

MANUFACTURER'S CERTIFICATION FOR A TANK BUILT TO API STANDARD 650

To _____
(name and address of Purchaser)

_____

_____

We hereby certify that the tank constructed for you at _____
(location)

_____

_____

and described as follows: _____
(serial or contract number, diameter, height, capacity, floating or fixed roof)

_____

meets all applicable requirements of API Standard 650, _____ Edition, _____ Revision, Annex _____, dated _____, including the requirements for design, materials, fabrication, and erection.

The tank is further described on the attached as-built data sheet dated _____.

_____
Manufacturer

_____
Authorized Representative

_____
Date

Figure 10.2—Manufacturer's Certification Letter

Annex A
(normative)

Optional Design Basis for Small Tanks

This annex provides a number of design options requiring decisions by the Purchaser; standard requirements; recommendations; and information that supplements the basic standard. This annex becomes a requirement only when the Purchaser specifies an option covered by this annex or specifies the entire annex.

A.1 Scope

- **A.1.1** This Annex provides requirements for field-erected tanks of relatively small capacity in which the stressed components have a nominal thickness of no more than 13 mm ($^1/_2$ in.). The stressed components include the shell and reinforcing plates, shell reinforcing plates for flush-type cleanout fittings and flush-type shell connections, and bottom plates that are welded to the shell. The nominal thickness limit of 13 mm ($^1/_2$ in.) does not apply to:

  1) bottom plates not welded to the shell;

  2) the bottom reinforcing plate of flush-type cleanouts and flush-type shell connections;

  3) flanges and cover plates of flush-type cleanouts;

  4) flush-type shell connection necks attached to shell and flanges and cover plates of flush-type shell connections;

  5) nozzle and manhole necks, their flanges and cover plates;

  6) anchor bolt chair components and shell compression ring.

- **A.1.2** This Annex is applicable only when specified by the Purchaser and is limited to design metal temperatures above –30 °C (–20 °F) [above –40 °C (–40 °F) when killed, fine-grain material is used].

A.1.3 This Annex is applicable to any of the Section 4 materials, although the single allowable stress does not provide any advantage to higher strength steels.

A.1.4 This Annex states only the requirements that differ from the basic rules in this standard. When differing requirements are not stated, the basic rules must be followed; however, the overturning effect of a wind load should be considered.

A.1.5 Typical sizes, capacities, and shell-plate thicknesses are listed in Tables A.1a through A.4b for a design in accordance with A.4 (joint efficiency = 0.85; specific gravity = 1.0; and corrosion allowance = 0).

A.2 Materials

A.2.1 Shell-plate materials shall not be more than 13 mm ($^1/_2$ in.) thick, as stated in A.1.1.

A.2.2 For stressed components, the Group-I and Group-II materials listed in Table 4.3a and Table 4.3b may be used at a design metal temperature of –30 °C (–20 °F) or warmer but need not conform to the toughness requirements of 4.2.9, Figure 4-1, and 9.2.2. Group-III and Group-IIIA materials may be used at a design metal temperature of –40 °C (–40 °F) or warmer and shall conform to impact requirements of 9.2.2.

A.2.3 Material used for shell nozzle and manhole necks and flanges shall conform to 4.5, 4.6, and Table 4-3a and Table 4-3b but need not conform to the toughness requirements of 4.2.9, 4.5.5, and Figure 4-1.

Table A.1a—Typical Sizes and Corresponding Nominal Capacities (m^3) for Tanks with 1800-mm Courses (SI)

Column 1	Column 2	Column 3	Column 4	Column 5	Column 6	Column 7	Column 8	Column 9	Column 10	Column 11
Tank Diameter m	Capacity per m of Height m^3	Tank Height (m) / Number of Courses in Completed Tank								
		3.6 / 2	5.4 / 3	7.2 / 4	9 / 5	10.8 / 6	12.6 / 7	14.4 / 8	16.2 / 9	18 / 10
3	7.07	25	38	51	64	76	—	—	—	—
4.5	15.9	57	86	115	143	172	—	—	—	—
6	28.3	102	153	204	254	305	356	407	—	—
7.5	44.2	159	239	318	398	477	557	636	716	795
9	63.6	229	344	458	573	687	802	916	1,031	1,145
10.5	86.6	312	468	623	779	935	1,091	1,247	1,403	1,559
12	113	407	611	814	1,018	1,221	1,425	1,629	1,832	2,036
13.5	143	515	773	1,031	1,288	1,546	1,804	2,061	2,319	2,576
15	177	636	954	1,272	1,590	1,909	2,227	2,545	2,863	3,181
18	254	916	1,374	1,832	2,290	2,748	3,206	3,664	4,122	4,580
										D = 18
21	346	1,247	1,870	2,494	3,117	3,741	4,364	4,988	5,089	—
24	452	1,629	2,443	3,257	4,072	4,886	5,700	5,474	D = 20	—
27	573	2,061	3,092	4,122	5,153	6,184	6,690	D = 22	—	—
30	707	2,545	3,817	5,089	6,362	7,634	D = 26	—	—	—
36	1,018	3,664	5,497	7,329	9,161	D = 30	—	—	—	—
					D = 36					
42	1,385	4,988	7,481	9,975	—	—	—	—	—	—
48	1,810	6,514	9,772	11,966	—	—	—	—	—	—
54	2,290	8,245	12,367	D = 46	—	—	—	—	—	—
60	2,827	10,179	15,268	—	—	—	—	—	—	—
66	3,421	12,316	16,303	—	—	—	—	—	—	—
			D = 62							

NOTE The nominal capacities given in this table were calculated using the following formula:

In SI units:

$$C = 0.785D^2H$$

where

C is the capacity of tank, in m^3;

D is the diameter of tank, in m (see A.4.1);

H is the height of tank, in m (see A.4.1).

The capacities and diameters in italics (Columns 4 through 11) are the maximums for the tank heights given in the column heads, based on a maximum permissible shell-plate thickness of 13 mm, a maximum allowable design stress of 145 MPa, a joint efficiency of 0.85, and no corrosion allowance (see A.4.1).

--`,,,```,,,,,,`,`,,,`,,,,,,```,`,,,-`-`,,`,,`,`,,`---

Table A.1b—Typical Sizes and Corresponding Nominal Capacities (barrels) for Tanks with 72-in. Courses (USC)

Column 1	Column 2	Column 3	Column 4	Column 5	Column 6	Column 7	Column 8	Column 9	Column 10	Column 11
Tank Diameter ft	Capacity per ft of Height barrels	Tank Height (ft) / Number of Courses in Completed Tank								
		12 / 2	18 / 3	24 / 4	30 / 5	36 / 6	42 / 7	48 / 8	54 / 9	60 / 10
10	14.0	170	250	335	420	505	—	—	—	—
15	31.5	380	565	755	945	1,130	—	—	—	—
20	56.0	670	1,010	1,340	1,680	2,010	2,350	2,690	—	—
25	87.4	1,050	1,570	2,100	2,620	3,150	3,670	4,200	4,720	5,250
30	126	1,510	2,270	3,020	3,780	4,530	5,290	6,040	6,800	7,550
35	171	2,060	3,080	4,110	5,140	6,170	7,200	8,230	9,250	10,280
40	224	2,690	4,030	5,370	6,710	8,060	9,400	10,740	12,100	13,430
45	283	3,400	5,100	6,800	8,500	10,200	11,900	13,600	15,300	17,000
50	350	4,200	6,300	8,400	10,500	12,600	14,700	16,800	18,900	21,000
60	504	6,040	9,060	12,100	15,110	18,130	21,150	24,190	37,220	28,260
										D = 58
70	685	8,230	12,340	16,450	20,580	24,700	28,800	32,930	30,970	—
80	895	10,740	16,120	21,500	26,880	32,260	37,600	35,810	*D* = 64	—
90	1,133	13,600	20,400	27,220	34,030	40,820	40,510	*D* = 73	—	—
100	1,399	16,800	25,200	33,600	42,000	48,400	*D* = 83	—	—	—
120	2,014	24,190	36,290	48,380	58,480	*D* = 98	—	—	—	—
					D = 118					
140	2,742	32,930	49,350	65,860	—	—	—	—	—	—
160	3,581	43,000	64,510	74,600	—	—	—	—	—	—
180	4,532	54,430	81,650	*D* = 149	—	—	—	—	—	—
200	5,595	67,200	100,800	—	—	—	—	—	—	—
220	6,770	81,310	102,830	—	—	—	—	—	—	—
			D = 202							

NOTE The nominal capacities given in this table were calculated using the following formula:

In USC units:

$$C = 0.14D^2H$$

where

C is the capacity of tank, 42-gal barrels;

D is the diameter of tank, in ft (see A.4.1);

H is the height of tank, in ft (see A.4.1).

The capacities and diameters in italics (Columns 4 through 11) are the maximums for the tank heights given in the column heads, based on a maximum permissible shell-plate thickness of 1/2 in., a maximum allowable design stress of 21,000 lbf/in.^{2}, a joint efficiency of 0.85, and no corrosion allowance (see A.4.1).

Table A.2a—Shell-Plate Thicknesses (mm) for Typical Sizes of Tanks with 1800-mm Courses (SI)

Column 1	Column 2	Column 3	Column 4	Column 5	Column 6	Column 7	Column 8	Column 9	Column 10	Column 11	Column 12
Tank Diameter m	Tank Height (m) / Number of Courses in Completed Tank										Maximum Allowable Height for Diameter[a] m
	1.8 / 1	3.6 / 2	5.4 / 3	7.2 / 4	9 / 5	10.8 / 6	12.6 / 7	14.4 / 8	16.2 / 9	18 / 10	
3	5.0	5.0	5.0	5.0	5.0	5.0	—	—	—	—	—
4.5	5.0	5.0	5.0	5.0	5.0	5.0	—	—	—	—	—
6	5.0	5.0	5.0	5.0	5.0	5.0	5.0	5.0	—	—	—
7.5	5.0	5.0	5.0	5.0	5.0	5.0	5.0	5.0	5.0	5.3	—
9	5.0	5.0	5.0	5.0	5.0	5.0	5.0	5.0	5.7	6.3	—
10.5	5.0	5.0	5.0	5.0	5.0	5.0	5.1	5.9	6.6	7.4	—
12	5.0	5.0	5.0	5.0	5.0	5.0	5.9	6.7	7.6	8.4	—
13.5	5.0	5.0	5.0	5.0	5.0	5.6	6.6	7.6	8.5	9.5	—
15	6.0	6.0	6.0	6.0	6.0	6.3	7.3	8.4	9.5	10.6	—
18	6.0	6.0	6.0	6.0	6.2	7.5	8.8	10.1	11.4	—	17.8
21	6.0	6.0	6.0	6.0	7.3	8.8	10.3	11.8	—	—	15.3
24	6.0	6.0	6.0	6.6	8.3	10.0	11.7	—	—	—	13.4
27	6.0	6.0	6.0	7.4	9.3	11.3	—	—	—	—	11.9
30	6.0	6.0	6.0	8.2	10.4	12.5	—	—	—	—	10.8
36	8.0	8.0	8.0	9.9	12.5	—	—	—	—	—	9.0
42	8.0	8.0	8.5	11.5	—	—	—	—	—	—	7.8
48	8.0	8.0	9.7	—	—	—	—	—	—	—	6.9
54	8.0	8.0	10.9	—	—	—	—	—	—	—	6.1
60	8.0	8.0	12.2	—	—	—	—	—	—	—	5.5
66	10.0	10.0	—	—	—	—	—	—	—	—	5.1

[a] Based on a maximum permissible shell-plate thickness of 13 mm, a maximum allowable design stress of 145 MPa, a joint efficiency of 0.85, and no corrosion allowance.

NOTE The plate thicknesses shown in this table are based on a maximum allowable design stress of 145 MPa, a joint efficiency of 0.85, and no corrosion allowance (see A.4.1).

Table A.2b—Shell-Plate Thicknesses (in.) for Typical Sizes of Tanks with 72-in. Courses (USC)

Column 1	Column 2	Column 3	Column 4	Column 5	Column 6	Column 7	Column 8	Column 9	Column 10	Column 11	Column 12
Tank Diameter ft	Tank Height (ft) / Number of Courses in Completed Tank										Maximum Allowable Height for Diameter[a] ft
	6 / 1	12 / 2	18 / 3	24 / 4	30 / 5	36 / 6	42 / 7	48 / 8	54 / 9	60 / 10	
10	3/16	3/16	3/16	3/16	3/16	3/16	—	—	—	—	—
15	3/16	3/16	3/16	3/16	3/16	3/16	—	—	—	—	—
20	3/16	3/16	3/16	3/16	3/16	3/16	3/16	3/16	—	—	—
25	3/16	3/16	3/16	3/16	3/16	3/16	3/16	3/16	0.20	0.22	—
30	3/16	3/16	3/16	3/16	3/16	3/16	3/16	0.21	0.24	0.26	—
35	3/16	3/16	3/16	3/16	3/16	3/16	0.21	0.24	0.27	0.30	—
40	3/16	3/16	3/16	3/16	3/16	0.21	0.24	0.28	0.31	0.35	—
45	3/16	3/16	3/16	3/16	3/16	0.23	0.27	0.31	0.35	0.38	—
50	1/4	1/4	1/4	1/4	1/4	0.26	0.30	0.35	0.39	0.43	—
60	1/4	1/4	1/4	1/4	0.26	0.31	0.36	0.41	0.47	—	58.2
70	1/4	1/4	1/4	1/4	0.30	0.36	0.42	0.48	—	—	50.0
80	1/4	1/4	1/4	0.27	0.34	0.41	0.48	—	—	—	43.9
90	1/4	1/4	1/4	0.31	0.38	0.46	—	—	—	—	39.1
100	1/4	1/4	1/4	0.34	0.43	—	—	—	—	—	35.3
120	5/16	5/16	5/16	0.41	—	—	—	—	—	—	29.6
140	5/16	5/16	0.35	0.47	—	—	—	—	—	—	25.5
160	5/16	5/16	0.40	—	—	—	—	—	—	—	22.5
180	5/16	5/16	0.45	—	—	—	—	—	—	—	20.1
200	5/16	0.32	0.50	—	—	—	—	—	—	—	18.2
220	3/8	3/8	—	—	—	—	—	—	—	—	16.6

[a] Based on a maximum permissible shell-plate thickness of 1/2 in., a maximum allowable design stress of 21,000 lbf/in.^{2}, a joint efficiency of 0.85, and no corrosion allowance.

NOTE The plate thicknesses shown in this table are based on a maximum allowable design stress of 21,000 lbf/in.^{2}, a joint efficiency of 0.85, and no corrosion allowance (see A.4.1).

Table A.3a—Typical Sizes and Corresponding Nominal Capacities (m^3) for Tanks with 2400-mm Courses (SI)

Column 1	Column 2	Column 3	Column 4	Column 5	Column 6	Column 7	Column 8	Column 9
Tank Diameter m	Capacity per m of Height m^3	Tank Height (m) / Number of Courses in Completed Tank						
		4.8 / 2	7.2 / 3	9.6 / 4	12 / 5	14.4 / 6	16.8 / 7	19.2 / 8
3	7.07	34	51	68	—	—	—	—
4.5	15.9	76	115	153	191	—	—	—
6	28.3	136	204	272	339	407	—	—
7.5	44.2	212	318	424	530	636	742	848
9	63.6	305	458	610	763	916	1,069	1,221
10.5	86.6	416	623	831	1,039	1,247	1,455	1,663
12	113	543	814	1085	1,357	1,629	1,900	2,171
13.5	143	687	1,031	1373	1,718	2,061	2,405	2,748
15	177	848	1,272	1696	2,121	2,545	2,969	3,393
18	254	1,221	1,832	2442	3,054	3,664	4,275	4,358
								D = 17
21	346	1,663	2,494	3323	4,156	4,988	4,763	—
24	452	2,171	3,257	4341	5,429	5,474	*D* = 19	—
27	573	2,748	4,122	5494	6,871	*D* = 22	—	—
30	707	3,393	5,089	6782	*D* = 27	—	—	—
36	1,018	4,886	7,329	8712	—	—	—	—
				D = 34				
42	1,385	6,650	9,975	—	—	—	—	—
48	1,810	8,686	11,966	—	—	—	—	—
54	2,290	10,993	*D* = 46	—	—	—	—	—
60	2,827	13,572	—	—	—	—	—	—
66	3,421	16,422	—	—	—	—	—	—

NOTE The nominal capacities given in this table were calculated using the following formula:

In SI units:

$$C = 0.785D^2H$$

where

C is the capacity of tank, in m^3;

D is the diameter of tank, in m (see A.4.1);

H is the height of tank, in m (see A.4.1).

The capacities and diameters in italics (Columns 4 through 9) are the maximums for the tank heights given in the column heads, based on a maximum permissible shell-plate thickness of 13 mm, a maximum allowable design stress of 145 MPa, a joint efficiency of 0.85, and no corrosion allowance (see A.4.1).

Table A.3b—Typical Sizes and Corresponding Nominal Capacities (barrels) for Tanks with 96-in. Courses (USC)

Column 1	Column 2	Column 3	Column 4	Column 5	Column 6	Column 7	Column 8	Column 9
Tank Diameter ft	Capacity per ft of Height barrels	Tank Height (ft) / Number of Courses in Completed Tank						
		16 / 2	24 / 3	32 / 4	40 / 5	48 / 6	56 / 7	64 / 8
10	14.0	225	335	450	—	—	—	—
15	31.5	505	755	1,010	1,260	—	—	—
20	56.0	900	1,340	1,790	2,240	2,690	—	—
25	87.4	1,400	2,100	2,800	3,500	4,200	4,900	5,600
30	126	2,020	3,020	4,030	5,040	6,040	7,050	8,060
35	171	2,740	4,110	5,480	6,850	8,230	9,600	10,980
40	224	3,580	5,370	7,160	8,950	10,740	12,540	14,340
45	283	4,530	6,800	9,060	11,340	13,600	15,880	18,140
50	350	5,600	8,400	11,200	14,000	16,800	19,600	22,400
60	504	8,060	12,100	16,130	20,160	24,190	28,220	26,130
								D = 54
70	685	10,960	16,450	21,950	27,440	32,930	30,140	—
80	895	14,320	21,500	28,670	35,840	35,810	D = 62	—
90	1,133	18,130	27,220	36,290	45,360	D = 73	—	—
100	1,399	22,380	33,600	44,800	D = 88	—	—	—
120	2,014	32,250	48,380	54,200	—	—	—	—
				D = 110				
140	2,742	43,900	65,860	—	—	—	—	—
160	3,581	57,340	74,600	—	—	—	—	—
180	4,532	72,570	D = 149	—	—	—	—	—
200	5,595	89,600	—	—	—	—	—	—
220	6,770	108,410	—	—	—	—	—	—

NOTE The nominal capacities given in this table were calculated using the following formula:

In USC units:

$$C = 0.14D^2H$$

where

C is the capacity of tank, 42-gal barrels;

D is the diameter of tank, in ft (see A.4.1);

H is the height of tank, in ft (see A.4.1).

The capacities and diameters in italics (Columns 4 through 9) are the maximums for the tank heights given in the column heads, based on a maximum permissible shell-plate thickness of 1/2 in., a maximum allowable design stress of 21,000 lbf/in.^{2}, a joint efficiency of 0.85, and no corrosion allowance (see A.4.1).

Table A.4a—Shell-Plate Thicknesses (mm) for Typical Sizes of Tanks with 2400-mm Courses (SI)

Column 1	Column 2	Column 3	Column 4	Column 5	Column 6	Column 7	Column 8	Column 9	Column 10
Tank Height Diameter m	Tank Height (m) / Number of Courses in Completed Tank								Maximum Allowable Height for Diameter[a] m
	2.4 / 1	4.8 / 2	7.2 / 3	9.6 / 4	12 / 5	14.4 / 6	16.8 / 7	19.2 / 8	
3	5.0	5.0	5.0	5.0	—	—	—	—	—
4.5	5.0	5.0	5.0	5.0	5.0	—	—	—	—
6	5.0	5.0	5.0	5.0	5.0	5.0	—	—	—
7.5	5.0	5.0	5.0	5.0	5.0	5.0	5.0	5.0	—
9	5.0	5.0	5.0	5.0	5.0	5.0	5.0	5.0	—
10.5	5.0	5.0	5.0	5.0	5.0	5.0	5.1	5.9	—
12	5.0	5.0	5.0	5.0	5.0	5.0	5.9	6.7	—
13.5	5.0	5.0	5.0	5.0	5.0	5.6	6.6	7.6	—
15	6.0	6.0	6.0	6.0	6.0	6.3	7.3	8.4	—
18	6.0	6.0	6.0	6.0	6.2	7.5	8.8	10.1	17.8
21	6.0	6.0	6.0	6.0	7.3	8.8	10.3	11.8	15.3
24	6.0	6.0	6.0	6.6	8.3	10.0	11.7	—	13.4
27	6.0	6.0	6.0	7.4	9.3	11.3	—	—	11.9
30	6.0	6.0	6.1	8.2	10.4	12.5	—	—	10.8
36	8.0	8.0	8.0	9.9	12.5	—	—	—	9.0
42	8.0	8.0	8.5	11.5	—	—	—	—	7.8
48	8.0	8.0	9.7	—	—	—	—	—	6.9
54	8.0	8.0	10.9	—	—	—	—	—	6.1
60	8.0	8.0	12.2	—	—	—	—	—	5.5
66	10.0	10.0	—	—	—	—	—	—	5.1

[a] Based on a maximum permissible shell-plate thickness of 13 mm, a maximum allowable design stress of 145 MPa, a joint efficiency of 0.85, and no corrosion allowance.

NOTE The plate thicknesses shown in this table are based on a maximum allowable design stress of 145 MPa, a joint efficiency of 0.85, and no corrosion allowance (see A.4.1).

Table A.4b—Shell-Plate Thicknesses (in.) for Typical Sizes of Tanks with 96-in. Courses (USC)

Column 1	Column 2	Column 3	Column 4	Column 5	Column 6	Column 7	Column 8	Column 9	Column 10
Tank Height Diameter ft	Tank Height (ft) / Number of Courses in Completed Tank								Maximum Allowable Height for Diameter[a] ft
	8 / 1	16 / 2	24 / 3	32 / 4	40 / 5	48 / 6	56 / 7	64 / 8	
10	3/16	3/16	3/16	3/16	—	—	—	—	—
15	3/16	3/16	3/16	3/16	3/16	—	—	—	—
20	3/16	3/16	3/16	3/16	3/16	3/16	—	—	—
25	3/16	3/16	3/16	3/16	3/16	3/16	0.20	0.23	—
30	3/16	3/16	3/16	3/16	3/16	0.21	0.24	0.28	—
35	3/16	3/16	3/16	3/16	0.20	0.24	0.28	0.33	—
40	3/16	3/16	3/16	3/16	0.23	0.28	0.32	0.37	—
45	3/16	3/16	3/16	0.21	0.26	0.31	0.36	0.42	—
50	1/4	1/4	1/4	0.25	0.29	0.35	0.40	0.46	—
60	1/4	1/4	1/4	0.27	0.34	0.41	0.48	—	58.2
70	1/4	1/4	1/4	0.32	0.40	0.48	—	—	50.0
80	1/4	1/4	0.27	0.37	0.46	—	—	—	43.9
90	1/4	1/4	0.31	0.41	—	—	—	—	39.1
100	1/4	1/4	0.34	0.46	—	—	—	—	35.3
120	5/16	5/16	0.41	—	—	—	—	—	29.6
140	5/16	5/16	0.47	—	—	—	—	—	25.5
160	5/16	0.35	—	—	—	—	—	—	22.5
180	5/16	0.40	—	—	—	—	—	—	20.1
200	5/16	0.44	—	—	—	—	—	—	18.2
220	3/8	0.48	—	—	—	—	—	—	16.6

[a] Based on a maximum permissible shell-plate thickness of 1/2 in., a maximum allowable design stress of 21,000 lbf/in.^{2}, a joint efficiency of 0.85, and no corrosion allowance.

NOTE The plate thicknesses shown in this table are based on a maximum allowable design stress of 21,000 lbf/in.^{2}, a joint efficiency of 0.85, and no corrosion allowance (see A.4.1).

A.2.4 Bottom reinforcing plates in flush-type cleanouts and flush-type shell connections, and flush-type fitting necks attached to shell shall conform to toughness requirements of 4.2.9 and Figure 4.1 at design metal temperature.

A.3 Design

A.3.1 The maximum tensile stress before the joint efficiency factor is applied shall be 145 MPa (21,000 lbf/in.^{2}).

A.3.2 Stresses shall be computed on the assumption that the tank is filled with water (specific gravity = 1.0) or with the liquid to be stored if it is heavier than water.

A.3.3 The tension in each ring shall be computed 300 mm (12 in.) above the centerline of the lower horizontal joint of the course in question. When these stresses are computed, the tank diameter shall be taken as the nominal diameter of the bottom course.

• **A.3.4** The joint efficiency factor shall be 0.85 with the spot radiography required by A.5.3. By agreement between the Purchaser and the Manufacturer, the spot radiography may be omitted, and a joint efficiency factor of 0.70 shall be used.

A.4 Thickness of Shell Plates

A.4.1 The nominal thicknesses of shell plates shall not be less than that computed from the stress on the vertical joints, using the following formula:

In SI units:

$$t = \frac{4.9D(H-0.3)G}{(E)(145)} + CA$$

where

t is the nominal thickness, in mm (see 5.6.1.1);

D is the nominal diameter of the tank, in m (see 5.6.1.1, Note 1);

H is the design liquid level, in m (see 5.6.3.2);

• G is the specific gravity of the liquid to be stored, as specified by the Purchaser. The specific gravity shall not be less than 1.0;

E is the joint efficiency, which is either 0.85 or 0.70 (see A.3.4);

• CA is the corrosion allowance, in mm, as specified by the Purchaser (see 5.3.2).

In USC units:

$$t = \frac{2.6D(H-1)G}{(E)(21{,}000)} + CA$$

where

t is the nominal thickness, in inches (see 5.6.1.1);

D is the nominal diameter of the tank, in ft (see 5.6.1.1, Note 1);

H is the design liquid level, in ft (see 5.6.3.2);

- G is the specific gravity of the liquid to be stored, as specified by the Purchaser. The specific gravity shall not be less than 1.0;

E is the joint efficiency, which is either 0.85 or 0.70 (see A.3.4);

- CA is the corrosion allowance, in inches, as specified by the Purchaser (see 5.3.2).

A.4.2 The nominal thickness of shell plates (including shell extensions for floating roofs) shall not be less than that listed in 5.6.1.1. The nominal thickness of shell plates refers to the tank shell as constructed. The nominal thicknesses given in 5.6.1.1 are based on erection requirements.

A.5 Tank Joints

A.5.1 Vertical and horizontal joints in the shell, bottom joints, shell-to-bottom joints, wind-girder joints, and roof and top-angle joints shall conform to 5.1.5.

A.5.2 The requirements of 5.7.3 for the spacing of welds do not apply except for the requirement that the spacing between the toes of welds around a connection shall not be less than $2^1/_2$ times the shell thickness at the connection (i.e. dimension A, B, C, or E in Figure 5.6 shall not be less than $2^1/_2$ times the shell thickness).

A.5.3 When radiographic examination is required (joint efficiency = 0.85), the spot radiographs of vertical joints shall conform to 8.1.2.2, Item a only, excluding the 10 mm ($^3/_8$ in.) shell-thickness limitation in Item a and excluding the additional random spot radiograph required by Item a. The spot radiographs of horizontal joints shall conform to 8.1.2.3.

A.6 Intermediate Wind Girders

Calculations for and installation of intermediate wind girders are not required unless specified by the Purchaser.

A.7 Shell Manholes and Nozzles

A.7.1 Except for other designs and shapes permitted by 5.7.1.2, shell manholes shall conform to 5.7.5, Figure 5.7a, Figure 5.7b, and Tables 5.3a through 5.5b.

A.7.2 Shell nozzles and flanges shall conform to 5.7.6; Figure 5.7b, Figure 5.8, and Figure 5.10; and Tables 5.6a through 5.8b. For regular type reinforced nozzles, minimum elevation dimension H_N shown in column 8 of Table 5.6 may be reduced when specified by the Purchaser provided the minimum weld spacing of A.5.2 is maintained.

A.7.3 The radiographic requirements of 5.7.3.4 do not apply.

A.8 Flush-Type Cleanout Fittings

A.8.1 The details and dimensions of flush-type cleanout fittings shall conform to 5.7.7, Figure 5.12 and Figure 5.13, and Tables 5.9a through 5.11b.

- **A.8.2** The provisions for stress relief specified in 5.7.4 and 5.7.7.3 are not required unless they are specified by the Purchaser or unless any plate in the unit has a thickness greater than 16 mm ($^5/_8$ in.).

A.9 Flush-Type Shell Connections

A.9.1 The details and dimensions of flush-type shell connections shall conform to 5.7.8, Figure 5.14, and Table 5.12a and Table 5.12b.

- **A.9.2** The provisions for stress relief specified in 5.7.4 and 5.7.8.3 are not required unless they are specified by the Purchaser or unless any plate in the assembly has a thickness greater than 16 mm ($^5/_8$ in.).

Annex AL
(normative)

Aluminum Storage Tanks

AL.1 Scope

AL.1.1 Construction

This Annex provides material, design, fabrication, erection, and inspecting requirements for vertical, cylindrical, aboveground, closed- and open top, welded aluminum storage tanks constructed of the alloys specified in AL.4.

AL.1.2 Requirements

This Annex states only the requirements that differ from the rules in this standard. For requirements not stated, follow the rules of this standard.

AL.1.3 Temperature

This Annex applies for maximum design temperatures up to 200 °C (400 °F). Alloys 5083, 5086, 5154, 5183, 5254, 5356, 5456, 5556, and 5654 shall not be used if the maximum design temperature exceeds 65 °C (150 °F). Ambient temperature tanks shall have a maximum design temperature of 40 °C (100 °F).

For maximum design temperatures above 93 °C (200 °F) designers shall consider thermal stresses and fatigue.

AL.1.4 Units

Use consistent units in this Annex's equations. For example, in an equation, use inches for all lengths (stress in lb/in.^{2} and tank diameter in inches) or use mm for all lengths (stress in N/mm^2 and tank diameter in mm).

AL.1.5 Nomenclature

Variables used in this Annex have the following meanings:

A = area of the roof-to-shell joint determined using Figure F.2

A_1 = 0.3 m (1 ft)

CA = corrosion allowance, as specified by the Purchaser (see 5.3.2)

D = nominal diameter of the tank (see 5.6.1.1)

E = compressive modulus of elasticity (see Table AL.8a and Table AL.8b)

E_j = joint efficiency, 1.0, 0.85, or 0.70 (see Table AL.2)

F_{tu} = minimum tensile ultimate strength

F_{ty} = minimum tensile yield strength

G = design specific gravity of the stored liquid

H = design liquid level (see 5.6.3.2)

p_h = greater of 5.2.2 load combinations (e)(1) and (e)(2)

S_d = allowable stress for the design condition (see Table AL.6a and Table AL.6b)

S_t = allowable stress for hydrostatic test condition (see Table AL.6a and Table AL.6b)

t_b = nominal thickness of the annular bottom plate

t_h = nominal roof thickness

t_s = nominal shell thickness

W = weight of the shell and any framing (but not roof plates) supported by the shell

γ_w = density of water

θ = roof slope to horizontal at the shell

ρ_h = density of the roof plate

AL.2 References

The following references are cited in this Annex. The latest edition shall be used.

AAI*, Aluminum Design Manual (ADM)*

ASTM, A193, *Standard Specification for Alloy-Steel and Stainless Steel Bolting Materials for High Temperature or High Pressure Service and Other Special Purpose Applications*

ASTM A194, *Standard Specification for Carbon and Alloy Steel Nuts for Bolts for High Pressure or High Temperature Service, or Both*

ASTM B209, *Standard Specification for Aluminum and Aluminum-Alloy Sheet and Plate*

ASTM B209M, *Standard Specification for Aluminum and Aluminum-Alloy Sheet and Plate [Metric]*

ASTM B210, *Standard Specification for Aluminum and Aluminum-Alloy Drawn Seamless Tubes*

ASTM B210M, *Standard Specification for Aluminum and Aluminum-Alloy Drawn Seamless Tubes [Metric]*

ASTM B211, *Standard Specification for Aluminum and Aluminum-Alloy Bar, Rod, and Wire*

ASTM B211M, *Standard Specification for Aluminum and Aluminum-Alloy Bar, Rod, and Wire [Metric]*

ASTM B221, *Standard Specification for Aluminum and Aluminum-Alloy Extruded Bars, Rods, Wire, Profiles, and Tubes*

ASTM B221M, *Standard Specification for Aluminum and Aluminum-Alloy Extruded Bars, Rods, Wire, Profiles, and Tubes [Metric]*

ASTM B241/B241M, *Standard Specification for Aluminum and Aluminum-Alloy Seamless Pipe and Seamless Extruded Tube*

ASTM B247, *Standard Specification for Aluminum and Aluminum-Alloy Die Forgings, Hand Forgings, and Rolled Ring Forgings*

ASTM B247M, *Standard Specification for Aluminum and Aluminum-Alloy Die Forgings, Hand Forgings, and Rolled Ring Forgings [Metric]*

ASTM B308/B308M, *Standard Specification for Aluminum-Alloy 6061-T6 Standard Structural Profiles*

ASTM B345/B345M, *Standard Specification for Aluminum and Aluminum-Alloy Seamless Pipe and Seamless Extruded Tube for Gas and Oil Transmission and Distribution Piping Systems*

ASTM B928, *Standard Specification for High Magnesium Aluminum-Alloy Sheet and Plate for Marine Service and Similar Environments*

ASTM F 467, *Standard Specification for Nonferrous Nuts for General Use*

ASTM F 467M, *Standard Specification for Nonferrous Nuts for General Use [Metric]*

ASTM F 468, *Standard Specification for Nonferrous Bolts, Hex Cap Screws, and Studs for General Use*

ASTM F 468M, *Standard Specification for Nonferrous Bolts, Hex Cap Screws, and Studs for General Use [Metric]*

ASTM F 593, *Standard Specification for Stainless Steel Bolts, Hex Cap Screws, and Studs*

ASTM F 594, *Standard Specification for Stainless Steel Nuts*

AWS, A5.10/A5.10M, *Specification for Bare Aluminum and Aluminum-Alloy Welding Electrodes and Rods*

AWS D1.2, *Structural Welding Code—Aluminum*

AL.3 Definitions

For the purposes of this Annex, the following definition applies:

AL.3.1
aluminum
Aluminum and aluminum alloys.

AL.4 Materials

AL.4.1 General

Alloys shall be selected from Table AL.1. Dimensional tolerances shall meet the material specifications given in AL.4. Impact testing and toughness verification are not required.

AL.4.2 Sheet and Plate

Sheet and plate shall meet ASTM B209 or B928. Tapered thickness plate may be used.

AL.4.3 Rod, Bar, and Structural Shapes

Rod, bar, and shapes shall meet ASTM B211, ASTM B221, or ASTM B308.

AL.4.4 Pipe and Tube

Pipe and tube shall meet ASTM B210, ASTM B241, or ASTM B345.

Table AL.1—Material Specifications

Sheet and Plate		Rod, Bar, and Shapes		Pipe and Tube		Forgings	
Alloy	**Temper**	**Alloy**	**Temper**	**Alloy**	**Temper**	**Alloy**	**Temper**
1060	all	1060	all	1060	all		
1100	all	1100	all	1100	all	1100	H112
3003	all	2024	T4	3003	all	3003	H112
Alclad 3003				Alclad 3003	all		
3004	all	3004	all				
Alclad 3004	all						
5050	all			5050	all		
5052	all	5052	all	5052	all		
5083	all	5083	all	5083	all	5083	H111, H112
5086	all	5086	all	5086	all		
5154	all	5154	all	5154	all		
5254	all			5254	all		
5454	all	5454	all	5454	all		
5456	all	5456	all	5456	all		
5652	all			5652	all		
6061	(1)	6061	T6	6061	T4, T6	6061	T6
Alclad 6061	(1)	6063	T5, T6	6063	T5, T6		

NOTE 1 Includes T4, T42, T451, T6, T62, T651 tempers.

Table AL.2—Joint Efficiency

Joint Efficiency (E_j)	Shell Radiography Requirements
1.00	Full radiography required for all vertical joints. Horizontal joints per 0.85 joint efficiency requirements.
0.85	Radiography per 8.1.2 except additional random spot radiography in first course vertical seams is not required.
0.70	No shell radiography required.

Table AL.3a—Minimum Mechanical Properties (SI)

Minimum Tensile Yield Strengths F_{ty} (MPa) at Temperatures (°C)								
Alloy	**Temper**	**40**	**65**	**90**	**120**	**150**	**175**	**200**
1060	all	17	17	17	15	13	12	11
1100	all	24	24	24	23	22	19	17
3003	all	34	34	34	34	32	30	26
Alclad 3003	all	31	31	31	30	28	27	23
3004	all	59	59	59	59	59	55	51
Alclad 3004	all	55	55	55	55	55	50	46
5050	all	41	41	41	41	41	40	39
5052, 5652	all	66	66	66	66	66	66	58
5083 (1)	all	124	123	do not use above 65 °C				
5083 (2)	all	117	117	do not use above 65 °C				
5086	all	97	96	do not use above 65 °C				
5154, 5254	all	76	76	do not use above 65 °C				
5454	all	93	83	83	83	82	80	77
5456 (1)	all	131	130	do not use above 65 °C				
5456 (2)	all	124	123	do not use above 65 °C				
6061, Alclad 6061	T4, T6 welded	103	103	103	103	101	91	72
6061	T6 extrusions	240	240	232	201	163	103	54
6063	T5, T6 welded	55	55	55	55	52	31	23
6063	T6	172	172	159	137	111	61	36
Minimum Tensile Ultimate Strengths F_{tu} (MPa) at Temperatures (°C)								
Alloy	**Temper**	**40**	**65**	**90**	**120**	**150**	**175**	**200**
1060	all	55	55					
1100	all	76	76					
3003	all	95	95					
Alclad 3003	all	90	90					
3004	all	150	150					
Alclad 3004	all	145	145					
5050	all	125	125					
5052, 5652	all	175	175					
5083 (1)	all	275	275	do not use above 65 °C				
5083 (2)	all	270	270	do not use above 65 °C				
5086	all	240	240	do not use above 65 °C				
5154, 5254	all	205	205	do not use above 65 °C				
5454	all	215	215					
5456 (1)	all	290	290	do not use above 65 °C				
5456 (2)	all	285	285	do not use above 65 °C				
6061, Alclad 6061	T4, T6 welded	165	165					
6061	T6 extrusions	260	260	243	208	169	117	76
6063	T5, T6 welded	115	115					
6063	T6	205	205	188	160	130	83	53

NOTE 1 Up to 40 mm thick.

NOTE 2 > 40 mm and ≤ 75mm thick.

NOTE 3 Strengths are for the –O temper for all alloys except 6061, Alclad 6061, and 6063 which are as noted.

Table AL.3b—Minimum Mechanical Properties (USC)

Minimum Tensile Yield Strengths F_{ty} (ksi) at Temperatures (°F)								
Alloy	**Temper**	**100**	**150**	**200**	**250**	**300**	**350**	**400**
1060	all	2.5	2.5	2.4	2.2	1.9	1.8	1.6
1100	all	3.5	3.5	3.5	3.4	3.2	2.8	2.4
3003	all	5.0	5.0	5.0	4.9	4.6	4.3	3.7
Alclad 3003	all	4.5	4.5	4.5	4.4	4.1	3.9	3.3
3004	all	8.5	8.5	8.5	8.5	8.5	8.0	7.4
Alclad 3004	all	8.0	8.0	8.0	8.0	8.0	7.2	6.7
5050	all	6.0	6.0	6.0	6.0	6.0	5.8	5.6
5052, 5652	all	9.5	9.5	9.5	9.5	9.5	9.5	8.4
5083 (1)	all	18	17.9	do not use above 150 °F				
5083 (2)	all	17	16.9	do not use above 150 °F				
5086	all	14	13.9	do not use above 150 °F				
5154, 5254	all	11	11	do not use above 150 °F				
5454	all	12	12	12	12	11.9	11.6	11.1
5456 (1)	all	19	18.8	do not use above 150 °F				
5456 (2)	all	18	17.9	do not use above 150 °F				
6061, Alclad 6061	T4, T6 welded	15	15	15	15	14.7	13.2	10.5
6061	T6 extrusions	35	35	33.6	29.1	23.6	14.9	7.9
6063	T5, T6 welded	8	8	8	8	7.5	4.5	3.4
6063	T6	25	25	23	19.8	16.1	8.9	5.2
Minimum Tensile Ultimate Strengths F_{tu} (ksi) at Temperatures (°F)								
Alloy	**Temper**	**100**	**150**	**200**	**250**	**300**	**350**	**400**
1060	all	8.0	8.0					
1100	all	11	11					
3003	all	14	14					
Alclad 3003	all	13	13					
3004	all	22	22					
Alclad 3004	all	21	21					
5050	all	18	18					
5052, 5652	all	25	25					
5083 (1)	all	40	40	do not use above 150 °F				
5083 (2)	all	39	39	do not use above 150 °F				
5086	all	35	35	do not use above 150 °F				
5154, 5254	all	30	30	do not use above 150 °F				
5454	all	31	31					
5456 (1)	all	42	42	do not use above 150 °F				
5456 (2)	all	41	41	do not use above 150 °F				
6061, Alclad 6061	T4, T6 welded	24	24					
6061	T6 extrusions	38	38	35.3	30.2	24.5	16.9	11.0
6063	T5, T6 welded	17	17					
6063	T6	30	30	27.2	23.2	18.9	12.0	7.7

NOTE 1 Up to 1.500 in. thick.

NOTE 2 > 1.500 in. thick, ≤ 3.000 in. thick.

NOTE 3 Strengths are for the –O temper for all alloys except 6061, Alclad 6061, and 6063 which are as noted.

AL.4.5 Forgings

Forgings shall meet ASTM B247.

AL.4.6 Flanges

AL.4.6.1 Aluminum

Flanges shall meet ASTM B247 and be 6061-T6. Flange dimensions shall meet ASME B16.5 or B16.47.

AL.4.6.2 Composite Lap Joint Flanges

For composite lap joint flanges, the aluminum stub ends shall be one of the alloys listed in Table AL.1 for sheet and plate or pipe and tube, and the steel, stainless steel, or galvanized steel flanges shall meet ASME B16.5.

AL.4.7 Bolting

AL.4.7.1 Aluminum

Aluminum bolts shall meet ASTM F468. Aluminum nuts shall meet ASTM F467. Bolts and nuts of 2024 alloy shall have an anodic coating at least 0.005 mm [0.0002 in.] thick. Bolts shall not be welded. Aluminum threads tend to gall, so aluminum threaded parts shall not be used where they must be reinstalled.

AL.4.7.2 Stainless Steel

Stainless steel bolts shall meet ASTM F593 alloy group 1 or 2, or ASTM A193 B8. Stainless steel nuts shall meet ASTM F594 alloy group 1 or 2 or ASTM A194 Grade 8.

AL.4.7.3 Carbon Steel

Carbon steel bolts shall be galvanized.

AL.4.8 Welding Electrodes

Welding electrodes shall meet AWS A5.10/A5.10M and shall be chosen in accordance with AWS D1.2.

AL.5 Design

AL.5.1 Joints

Joints shall be as prescribed in 5.1.5 unless otherwise specified below.

AL.5.1.1 Bottom Joints

a) Bottom plates under the shell thicker than 8 mm ($^5/_{16}$ in.) shall be butt welded.

b) *Butt-Welded Bottom Joints*. The butt welds may be made from both sides or from one side and shall have full penetration and full fusion. In the latter case, a backing strip 5 mm ($^3/_{16}$ in.) or thicker, of an aluminum alloy compatible with the bottom plate, shall be tacked to one of the plates, and the intersection joints of the strips shall be welded with full penetration and full fusion.

AL.5.1.2 Roof and Top Angle Joints

The moment of inertia of the top angle and contributing portion of the shell (see AL.5.5) shall equal or exceed that provided by the sizes listed below:

In SI units:

Diameter (m)	Size (mm)
$D < 11$	$65 \times 65 \times 6$
$11 < D < 18$	$65 \times 65 \times 8$
$18 < D$	$75 \times 75 \times 10$

In USC units:

Diameter (ft)	Size (in.)
$D < 35$	$2\ ^1/_2 \times 2\ ^1/_2 \times\ ^1/_4$
$35 < D \leq 61$	$2\ ^1/_2 \times 2\ ^1/_2 \times\ ^5/_{16}$
$61 < D$	$3 \times 3 \times\ ^3/_8$

AL.5.2 Bottoms

AL.5.2.1 Annular Bottom Plate Width

Annular bottom plates shall have a radial width that meets the requirements of 5.5.2 except that the width must equal or exceed:

$$2t_b\sqrt{\frac{F_{ty}}{2\gamma_w GH}}$$

AL.5.2.2 Annular Bottom Plate Thickness

The nominal thickness of annular bottom plates shall equal or exceed the requirements given in Table AL.4a and Table AL.4b.

Table AL.4a—Annular Bottom Plate Thickness (SI)

Nominal Thickness of First Shell Course (mm)	Hydrostatic Test Stress in First Shell Course (MPa)						
	14	28	41	55	69	83	97
$t \leq 12.7$	6	6	6	6	6	6	7
$12.7 < t \leq 19$	6	6	6	6	7	9	10
$19 < t \leq 25$	6	6	6	7	10	12	15
$25 < t \leq 32$	6	6	7	10	13	16	19
$32 < t \leq 38$	6	6	10	12	16	19	27
$38 < t \leq 51$	6	10	11	16	21	25	31

Table AL.4b—Annular Bottom Plate Thickness (USC)

Nominal Thickness of First Shell Course (in.)	Hydrostatic Test Stress in First Shell Course (ksi)						
	2.0	4.0	6.0	8.0	10.0	12.0	14.0
$t \le 0.50$	1/4	1/4	1/4	1/4	1/4	1/4	9/32
$0.50 < t \le 0.75$	1/4	1/4	1/4	1/4	9/32	11/32	13/32
$0.75 < t \le 1.00$	1/4	1/4	1/4	9/32	3/8	15/32	19/32
$1.00 < t \le 1.25$	1/4	1/4	9/32	3/8	1/2	5/8	3/4
$1.25 < t \le 1.50$	1/4	1/4	3/8	15/32	5/8	3/4	1 1/16
$1.50 < t \le 2.00$	1/4	3/8	7/16	5/8	13/16	1	1 7/32

AL.5.3 Shells

The nominal thickness of the shell plates shall be no less than the greatest of the calculated design shell thickness t_d including any corrosion allowance, the hydrostatic test shell thickness t_t, and the thickness required by Table AL.5a and Table AL.5b:

$$t_d = \frac{\gamma_w G D (H - A_1)}{2 E_j S_d} + CA$$

$$t_t = \frac{\gamma_w D (H - A_1)}{2 E_j S_t}$$

Table AL.5a—Minimum Shell Thickness (SI)

Nominal Tank Diameter (m)	Nominal Plate Thickness (m)
$D < 6$	5
$6 \le D < 36$	6
$36 \le D \le 60$	8
$D > 60$	10

Table AL.5b—Minimum Shell Thickness (USC)

Nominal Tank Diameter (ft)	Nominal Plate Thickness (in.)
$D < 20$	3/16
$20 \le D < 120$	1/4
$120 \le D \le 200$	5/16
$D > 200$	3/8

AL.5.4 Shell Openings

AL.5.4.1 Thermal Stress Relief

Thermal stress relief requirements of 5.7.4 do not apply.

AL.5.4.2 Shell Manholes

Shell manholes shall meet 5.7.5 except the following.

a) *Cover Plate and Flange Thickness*. The cover plate and flange thickness shall comply with Figure AL.1 and Figure AL.2. As an alternative to Figure AL.1 and Figure AL.2, plate flanges may be designed in accordance with API 620 rules using the allowable stresses from Table AL.6a and Table AL.6b.

b) *Neck Thickness*. Where manhole neck thickness is controlled by thickness of the bolting flange (see note b of Table 5.4a and Table 5.4b), the flange thickness determined in item 1 above shall be used.

c) *Weld Sizes*: Fillet weld A shall comply with Table AL.9a and Table AL.9b.

AL.5.4.3 Nozzles

Shell nozzles shall meet 5.7.6 except fillet weld A shall comply with Table AL.9a and Table AL.9b.

AL.5.4.4 Flush Type Cleanouts

Flush-type cleanout fittings shall comply with Figure AL.1, Figure AL.2, and Figure AL.3.

AL.5.5 Wind Girders

The length of the shell included in the area of wind girders shall be $0.424\sqrt{Dt_s}$ except for unstiffened shell above top wind girders, the length shall be $56t_s\sqrt{F_{ty}}$.

AL.5.5.1 Wind Girders

The section modulus of wind girders shall equal or exceed:

$$Z = \frac{pH_wD^3}{12Ec}$$

where

p equals (1.48 kPa) $[V/(190 \text{ km/hr})]^2$;

p equals (31 lb/ft^2) $[V/(120 \text{ mph})]^2$;

V is the 3-sec gust design wind speed [see 5.2.1(k)];

H_w is for top wind girders on tanks with no intermediate wind girder, the tank height; for tanks with intermediate wind girders, the vertical distance between the intermediate wind girder and the top angle of the shell or the top wind girder of an open-top tank;

c is the lesser of the distances from the neutral axis to the extreme fibers of the wind girder.

Table AL.6a—Allowable Tensile Stresses for Tank Shell (for Design and Test) (SI)

Allowable Stress (MPa) (5) S_d for Maximum Design Temperature Not Exceeding											
Alloy	**Temper**	**Minimum Yield Strength MPa (4)**	**Minimum Tensile Strength MPa (4)**	**40 °C**	**65 °C**	**90 °C**	**120 °C**	**150 °C**	**175 °C**	**200 °C**	**S_t Ambient (6)**
1060	all	17	55	14	14	13	12	10	7	6	15
1100	all	24	76	19	19	19	19	12	9	7	21
3003	all	34	97	28	28	28	22	17	12	10	29
Alclad 3003	all	31	90	25	25	25	20	15	11	9	26
3004	all	59	152	47	47	47	47	40	26	16	50
Alclad 3004	all	55	145	44	44	44	44	40	26	16	47
5050	all	41	124	33	33	33	33	33	19	10	35
5052, 5652	all	66	172	52	52	52	52	39	28	16	56
5083 (1)	all	124	276	90	90	do not use above 65 °C					91
5083 (2)	all	117	269	88	88	do not use above 65 °C					89
5086	all	97	241	77	77	do not use above 65 °C					80
5154, 5254	all	76	207	61	60	do not use above 65 °C					64
5454	all	83	214	66	66	66	51	38	28	21	70
5456 (1)	all	131	290	96	96	do not use above 65 °C					96
5456 (2)	all	124	283	93	93	do not use above 65 °C					93
6061, Alclad 6061 (3)	T4, T6, T451, T651		165	55	55	55	54	51	42	30	55

NOTE 1 Up to 40 mm thick.

NOTE 2 > 40 mm and ≤ 80 mm thick

NOTE 3 Tempers T4 and T6 apply for thickness < 6 mm, T451 and T651 apply for thickness ≥ 6 mm.

NOTE 4 Strengths are for the –O temper for all alloys except 6061, Alclad 6061, and 6063.

NOTE 5 The design stress shall be the lesser of 1/3 of the minimum tensile strength, 0.8 of the minimum yield strength, the stress producing a secondary creep rate of 0.1 % in 1000 hr, or 67 % of the average stress for rupture at the end of 100,000 hr.

NOTE 6 The allowable test stress shall be the lesser of 1/3 of the minimum tensile strength or 0.85 of the minimum yield strength at ambient temperature.

Table AL.6b—Allowable Tensile Stresses for Tank Shell (for Design and Test) (USC)

Allowable Stress (psi) (5) S_d for Maximum Design Temperature Not Exceeding											
Alloy	**Temper**	**Minimum Yield Strength (psi) (4)**	**Minimum Tensile Strength (psi) (4)**	**100 °F**	**150 °F**	**200 °F**	**250 °F**	**300 °F**	**350 °F**	**400 °F**	**S_t Ambient (6)**
1060	all	2,500	8,000	2,000	2,000	1,900	1,750	1,450	1,050	800	2,100
1100	all	3,500	11,000	2,800	2,800	2,800	2,700	1,750	1,350	1,000	3,000
3003	all	5,000	14,000	4,000	4,000	4,000	3,150	2,400	1,800	1,400	4,300
Alc 3003	all	4,500	13,000	3,600	3,600	3,600	2,850	2,150	1,600	1,250	3,800
3004	all	8,500	22,000	6,800	6,800	6,800	6,800	5,750	3,800	2,350	7,200
Alc 3004	all	8,000	21,000	6,400	6,400	6,400	6,400	5,750	3,800	2,350	6,800
5050	all	6,000	18,000	4,800	4,800	4,800	4,800	4,800	2,800	1,400	5,100
5052, 5652	all	9,500	25,000	7,600	7,600	7,600	7,500	5,600	4,100	2,350	8,100
5083 (1)	all	18,000	40,000	13,000	13,000	do not use above 150 °F					13,200
5083 (2)	all	17,000	39,000	12,800	12,800	do not use above 150 °F					12,900
5086	all	14,000	35,000	11,200	11,100	do not use above 150 °F					11,600
5154, 5254	all	11,000	30,000	8,800	8,700	do not use above 150 °F					9,400
5454	all	12,000	31,000	9,600	9,600	9,600	7,400	5,500	4,100	3,000	10,200
5456 (1)	all	19,000	42,000	13,900	13,900	do not use above 150 °F					13,900
5456 (2)	all	18,000	41,000	13,500	13,500	do not use above 150 °F					13,500
6061, Alc 6061 (3)	T4, T6, T451, T651		24,000	8,000	8,000	8,000	7,900	7,400	6,100	4,300	8,000

NOTE 1 Up to 1.500 in. thick.

NOTE 2 > 1.500 in. and ≤ 3.000 in. thick.

NOTE 3 Temper T4 and T6 apply for thickness < 6 mm (0.25 in.), T451 and T651 apply for thickness ≥ 0.25 in.

NOTE 4 Strengths are for the – O temper for all alloys except 6061, Alclad 6061, and 6063.

NOTE 5 The design stress shall be the lesser of 1/3 of the minimum tensile strength, 0.8 of the minimum yield strength, the stress producing a secondary creep rate of 0.1 % in 1000 hr, or 67 % of the average stress for rupture at the end of 100,000 hr.

NOTE 6 The allowable test stress shall be the lesser of 1/3 of the minimum tensile strength or 0.85 of the minimum yield strength at ambient temperature.

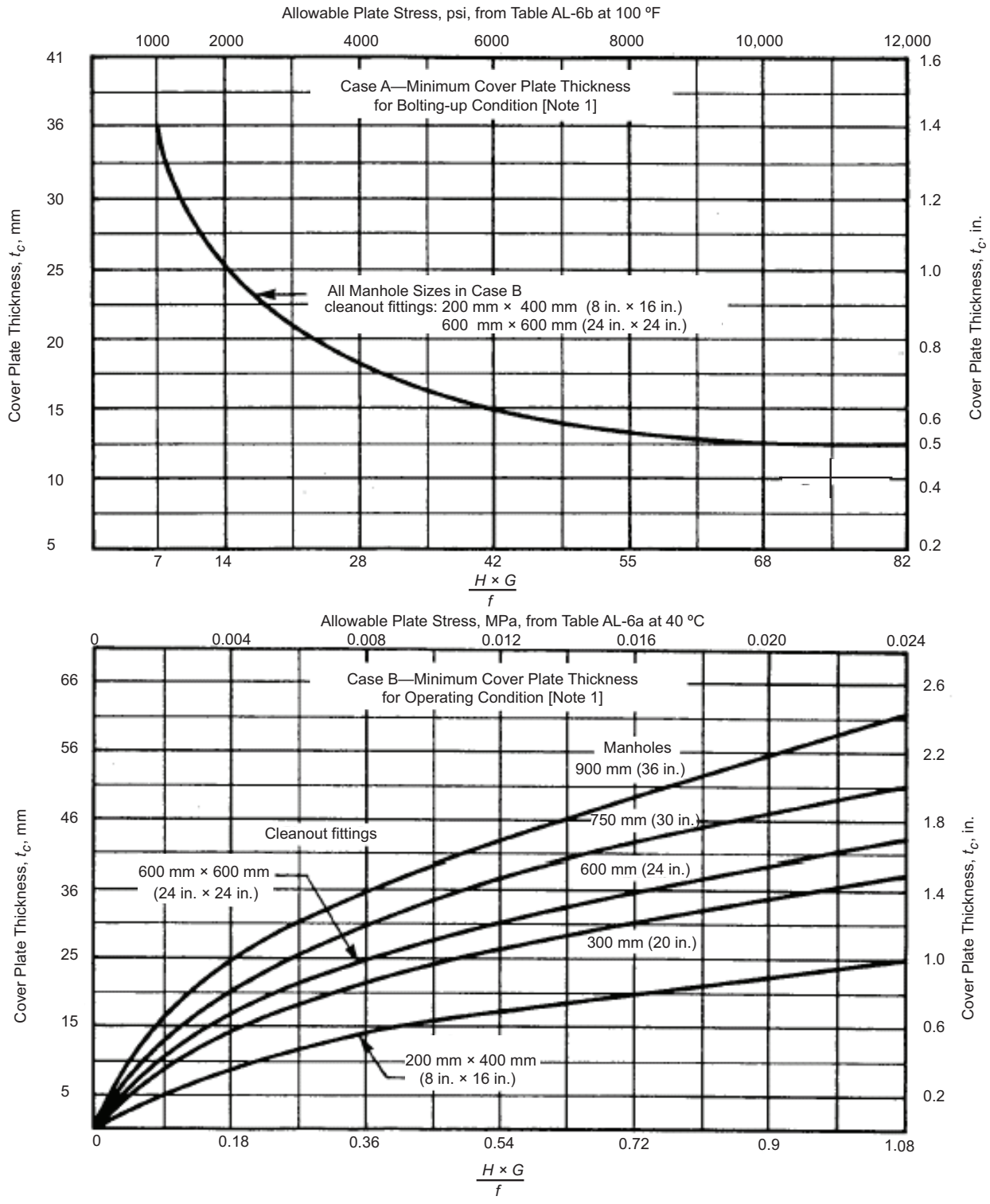

G is the specific gravity of liquid that determines the shell thickness;
H is the height of design liquid level above centerline of manhole m (ft);
f is the allowable tensile stress (S_d or S_b) from Table AL-6a and Table AL-6b at the temperature coincident with *G*, MPa (psi).

NOTE 1 The minimum cover plate thickness shall be a maximum of Case A or B values.

Figure AL.1—Cover Plate Thickness for Shell Manholes and Cleanout Fittings

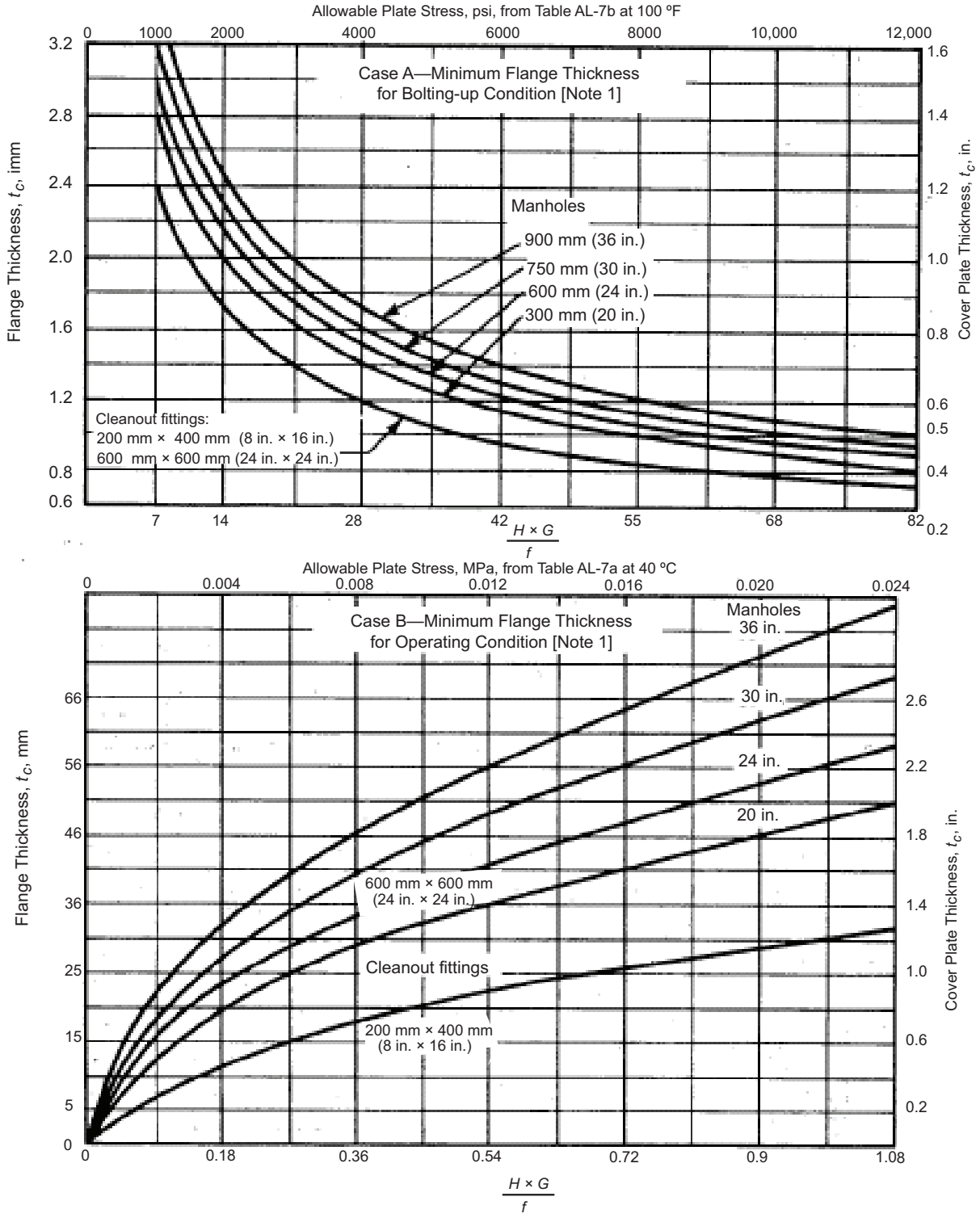

G is the specific gravity of liquid that determines the shell thickness;

H is the height of design liquid level above centerline of manhole, m (ft);

f is the allowable tensile stress (S_d or S_b) from Table AL-6a and Table AL-6b at the temperature coincident with G, MPa (psi).

NOTE 1 The minimum cover plate thickness shall be a maximum of Case A or B values.

Figure AL.2—Flange Plate Thickness for Shell Manholes and Cleanout Fittings

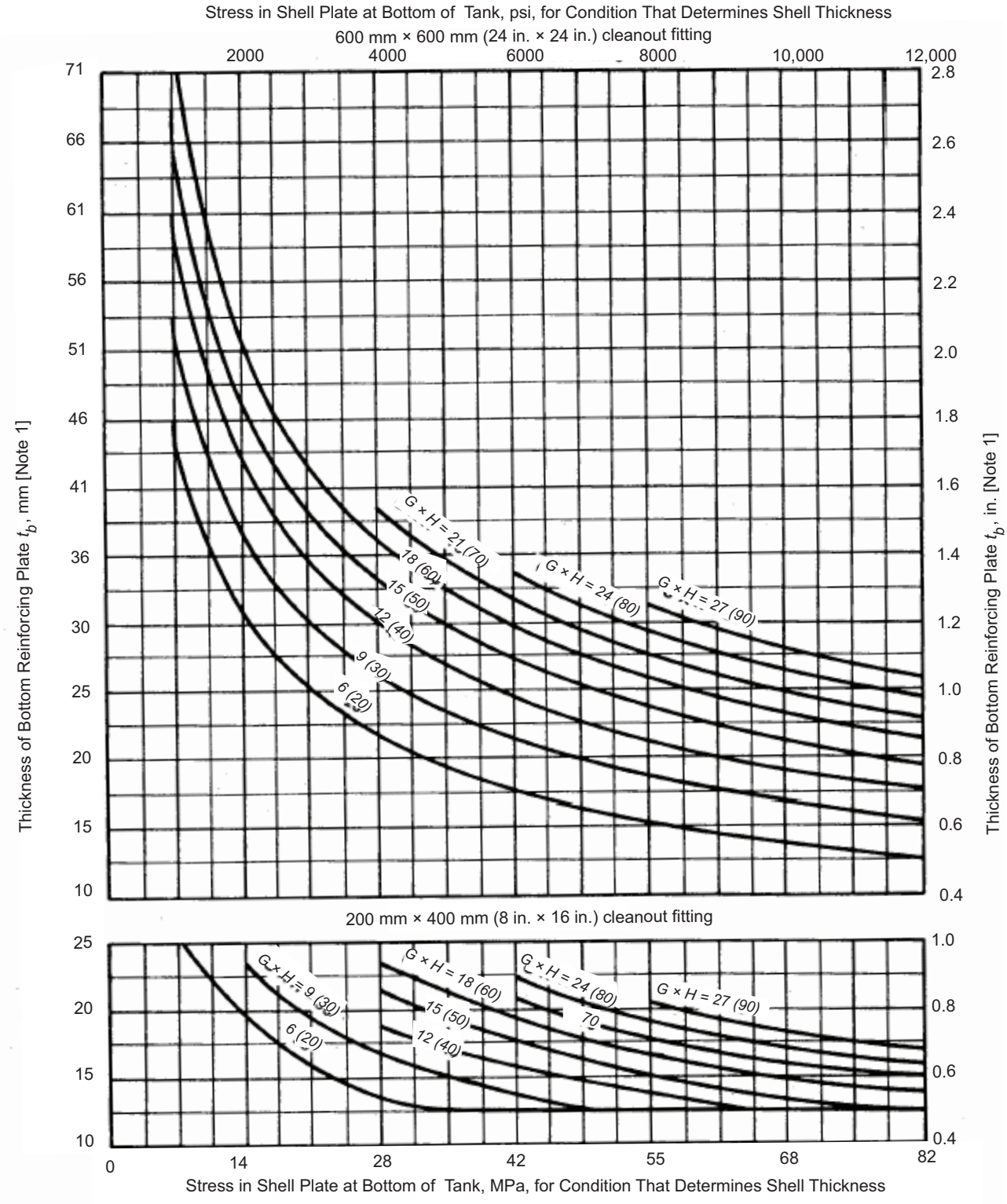

G is the specific gravity of liquid that determines the shell thickness;
H is the design liquid level, m (ft).

NOTE 1 The bottom reinforcing plate shall be the same alloy and temper as the bottom shell plate.

Figure AL.3—Bottom Reinforcing Plate Thickness for Cleanout Fittings

A.5.5.2 Intermediate Wind Girders

The height of the unstiffened shell shall not exceed:

$$H_1 = 2400t\sqrt{\left(\frac{1200t}{D}\right)^3}\left(\frac{E_{MDT}}{E_{40}}\right)$$

where

H_1 is the vertical distance between the intermediate wind girder and the top angle of the shell or the top wind girder of an open-top tank;

t is the nominal thickness, unless otherwise specified, of the top shell course;

E_{MDT} is the modulus of elasticity at the maximum design temperature;

E_{40} is the modulus of elasticity at 40 °C (100 °F).

AL.5.6 Roofs

AL.5.6.1 Structural Members

The minimum nominal thickness of structural members shall be 4 mm (0.15 in.).

AL.5.6.2 Frangible Roofs

Roofs required to be frangible shall meet the requirements of 5.10.2.6 except that the cross sectional area *A* of the roof-to-shell joint shall not exceed $0.159W/(F_{ty}\tan\theta)$ where F_{ty} = the greatest tensile yield strength of the materials in the joint.

AL.5.6.3 Allowable Stresses

Roofs shall be proportioned so that stresses from the load combinations specified in 5.10.2.1 do not exceed the allowable stresses given in the *Aluminum Design Manual (ADM) Specification for Aluminum Structures—Allowable Stress Design for building type structures.* Allowable stresses for ambient temperature service shall be calculated using the minimum mechanical properties given in the ADM. Allowable stresses for elevated temperature service shall be calculated using the minimum mechanical properties given in Table AL.8a and Table AL.8b. Section 5.10.3.4 does not apply.

AL.5.6.4 Supported Cone Roofs

a) The stresses determined from Figure AL.4 for dead load and dead and live loads for the thickness and span of roof plates shall not exceed the allowable stresses given in Table AL.7a and Table AL.7b.

b) The roof supporting structure shall be of 6061-T6 or 6063-T6 and proportioned so stresses do not exceed allowable stresses. Dead load stresses for temperatures over 120 °C (250 °F) shall not exceed 25 % of allowable stresses.

c) Low cycle fatigue failures may occur at the roof-to-top-angle weld and at roof lap welds for roofs designed to the minimum requirements of this standard when:

1) the internal pressure exceeds the weight of the roof plates; or

2) tanks larger than 15 m (50 ft) in diameter are subjected to steady wind speeds of 40 to 50 km/hr (25 to 30 mph) or greater.

Table AL.7a—Allowable Stresses for Roof Plates (SI)

Allowable Tensile Stresses (MPa) at Maximum Design Temperatures (°C) Not Exceeding									
Alloy	**Temper**		**40**	**65**	**90**	**120**	**150**	**175**	**200**
3003	all	(dead load)				22	16	12	9.6
		(dead + live load)	34	34	34	34	32	30	26
Alclad 3003	all	(dead load)				20	15	11	8.6
		(dead + live load)	31	31	31	30	29	27	23
3004	all	(dead load)					40	26	16
		(dead + live load)	59	59	59	59	59	55	51
Alclad 3004	all	(dead load)					36	23	17
		(dead + live load)	55	55	55	55	55	50	46
5050	all	(dead load)					37	19	9.6
		(dead + live load)	41	41	41	41	41	40	39
5052, 5652	all	(dead load)					43	28	16
		(dead + live load)	66	66	66	66	66	66	58
5083	all	(dead + live load)	124	123	do not use above 65 °C				
5086	all	(dead + live load)	97	96	do not use above 65 °C				
5154, 5254	all	(dead + live load)	76	76	do not use above 65 °C				
5454	all	(dead load)			81	51	38	28	21
		(dead + live load)	83	83	83	83	82	80	77
5456	all	(dead + live load)	131	130	do not use above 65°C				
6061, Alclad 6061	T4, T6	(dead load)					57	42	30
		(dead + live load)	66	66	66	65	61	51	39

NOTE For non-heat treatable alloys, allowable stresses for dead + live loads are the lesser of the yield strength, the stress producing a secondary creep rate of 0.1 % in 10,000 hr, 67 % of the average stress for rupture after 100,000 hr. For heat treatable alloys, allowable stresses are 40 % of the minimum strength of groove welds.

Table AL.7b—Allowable Stresses for Roof Plates (USC)

Allowable Tensile Stresses (ksi) at Maximum Design Temperatures (°F) Not Exceeding									
Alloy	**Temper**		**100**	**150**	**200**	**250**	**300**	**350**	**400**
3003	all	(dead load)				3.15	2.4	1.8	1.4
		(dead + live load)	5.0	5.0	5.0	4.9	4.6	4.3	3.7
Alclad 3003	all	(dead load)				2.85	2.15	1.6	1.25
		(dead + live load)	4.5	4.5	4.5	4.4	4.15	3.85	3.35
3004	all	(dead load)					5.75	3.8	2.35
		(dead + live load)	8.5	8.5	8.5	8.5	8.5	8.0	7.4
Alclad 3004	all	(dead load)					5.15	3.4	2.4
		(dead + live load)	8.0	8.0	8.0	8.0	8.0	7.2	6.65
5050	all	(dead load)					5.35	2.8	1.4
		(dead + live load)	6.0	6.0	6.0	6.0	6.0	5.8	5.6

Table AL.7b—Allowable Stresses for Roof Plates (USC) (Continued)

Allowable Tensile Stresses (ksi) at Maximum Design Temperatures (°F) Not Exceeding									
Alloy	**Temper**		**100**	**150**	**200**	**250**	**300**	**350**	**400**
5052, 5652	all	(dead load)					6.25	4.1	2.35
		(dead + live load)	9.5	9.5	9.5	9.5	9.5	9.5	8.4
5083	all	(dead + live load)	18	17.9	do not use above 150 °F				
5086	all	(dead + live load)	14	13.9	do not use above 150 °F				
5154, 5254	all	(dead + live load)	11	11	do not use above 150 °F				
5454	all	(dead load)			11.7	7.4	5.5	4.1	3.0
		(dead + live load)	12	12	12	12	11.9	11.6	11.1
5456	all	(dead + live load)	19	18.8	do not use above 150 °F				
6061, Alclad 6061	T4, T6	(dead load)					8.2	6.1	4.3
		(dead + live load)	9.6	9.6	9.6	9.45	8.85	7.45	5.65

NOTE For non-heat treatable alloys, allowable stresses for dead + live loads are the lesser of the yield strength, the stress producing a secondary creep rate of 0.1 % in 10,000 hr, 67 % of the average stress for rupture after 100,000 hr. For heat treatable alloys, allowable stresses are 40 % of the minimum strength of groove welds.

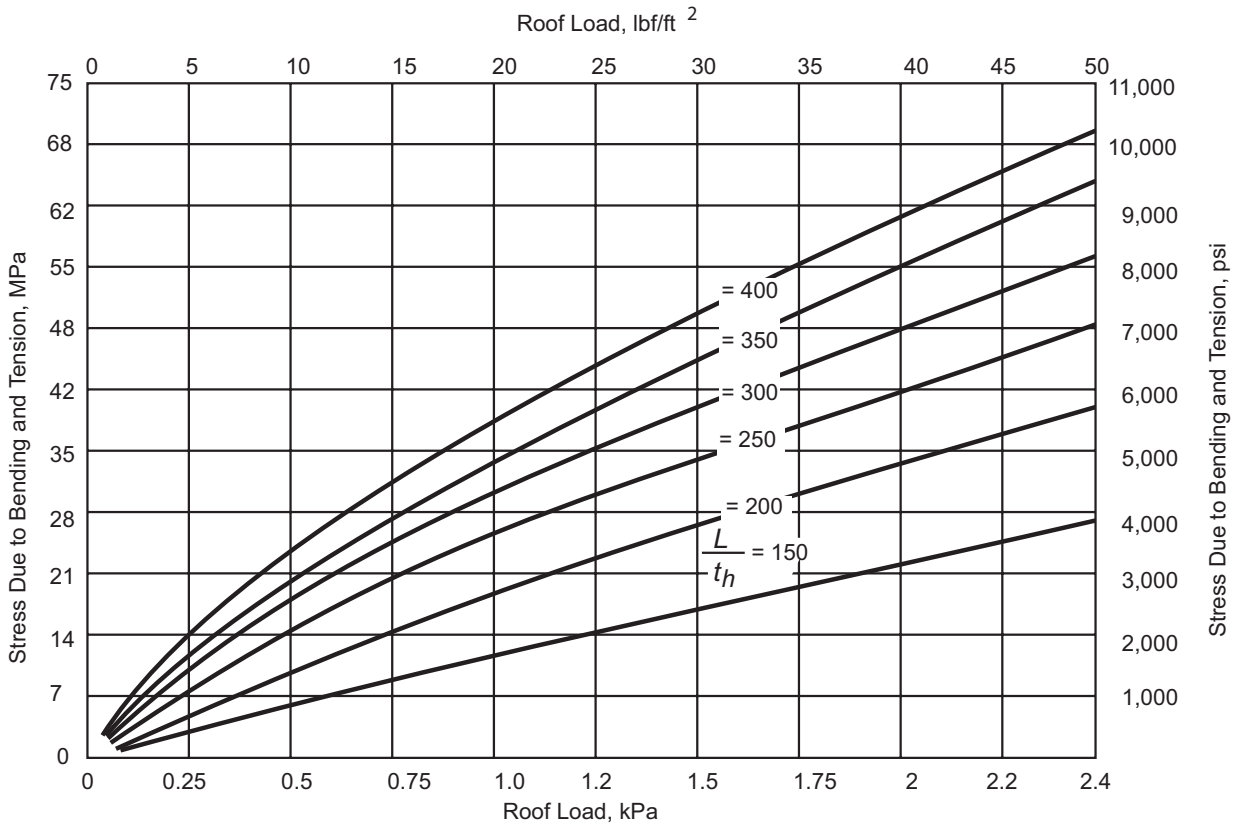

L is the maximum rafter spacing, mm (in.);
t_h is the thickness of roof, mm (in.).

Figure AL.4—Stresses in Roof Plates

Table AL.8a—Compressive Moduli of Elasticity *E* (MPa) at Temperature (°C) (SI)

Alloy	40	65	90	120	150	175	200
1060	69,600	68,300	66,900	64,800	63,400	60,700	57,900
1100	69,600	68,300	66,900	64,800	63,400	60,700	57,900
3003, Alclad 3003	69,600	68,300	66,900	64,800	63,400	60,700	57,900
3004, Alclad 3004	69,600	68,300	66,900	64,800	63,400	60,700	57,900
5050	69,600						
5052, 5652	71,000	68,900	67,600	64,800	62,700	59,300	55,800
5083	71,700	70,300	do not use above 65 °C				
5086	71,700	70,300	do not use above 65 °C				
5154, 5254	71,000		do not use above 65 °C				
5454	71,000	68,900	67,600	64,800	62,700	59,300	55,800
5456	71,700	70,300	do not use above 65 °C				
6061	69,600	68,300	66,900	65,500	64,100	62,700	60,700
6063	69,600	68,300	66,900	65,500	64,100	62,700	60,700

NOTE 1 Tensile moduli = (compressive moduli)/1.02.

Table AL.8b—Compressive Moduli of Elasticity *E* (ksi) at Temperature (°F) (USC)

Alloy	100	150	200	250	300	350	400
1060	10,100	9900	9700	9400	9200	8800	8400
1100	10,100	9900	9700	9400	9200	8800	8400
3003, Alclad 3003	10,100	9900	9700	9400	9200	8800	8400
3004, Alclad 3004	10,100	9900	9700	9400	9200	8800	8400
5050	10,100						
5052, 5652	10,300	10,000	9800	9400	9100	8600	8100
5083	10,400	10,200	do not use above 150 °F				
5086	10,400	10,200	do not use above 150 °F				
5154, 5254	10,300		do not use above 150 °F				
5454	10,300	10,000	9800	9400	9100	8600	8100
5456	10,400	10,200	do not use above 150 °F				
6061	10,100	9900	9700	9500	9300	9100	8800
6063	10,100	9900	9700	9500	9300	9100	8800

NOTE 1 Tensile moduli = (compressive moduli)/1.02.

Table AL.9a and Table AL.9b are the same as Table 5.7a and Table 5.7b, respectively, with the following modifications:

Table AL.9a—Shell Nozzle Welding Schedule (SI)

Dimensions in mm

Column 1	Column 5
Thickness of Shell and Reinforcing Plate t and T	**Size of Fillet Weld A Nozzles Larger Than NPS 2**
5	6
6	6
8	6
10	6
11	6
13	6
14	6
16	8
17	8
20	10
21	11
22	11
24	13
25	13
27	14
28	14
30	14
32	16
33	16
35	17
36	17
38	20
40	21
41	21
43	22
45	22

Table AL.9b—Shell Nozzle Welding Schedule (USC)
Dimensions in inches

Column 1	Column 5
Thickness of Shell and Reinforcing Plate *t* and *T*	**Size of Fillet Weld A Nozzles Larger Than NPS 2**
3/16	1/4
1/4	1/4
5/16	1/4
3/8	1/4
7/16	1/4
1/2	1/4
9/16	1/4
5/8	5/16
11/16	5/16
3/4	3/8
13/16	7/16
7/8	7/16
15/16	1/2
1	1/2
1 1/16	9/16
1 1/8	9/16
1 3/16	9/16
1 1/4	5/8
1 5/16	5/8
1 3/8	11/16
1 7/16	11/16
1 1/2	3/4
1 9/16	13/16
1 5/8	13/16
1 11/16	7/8
1 3/4	7/8

AL.5.6.5 Self-Supporting Cone Roofs

a) The minimum nominal roof thickness is t_h.

$$t_h = \frac{2D}{\sin\theta}\sqrt{\frac{p_h}{E}}$$

b) The minimum area of the roof-to-shell joint is A.

$$A = p_h D^2/(8f\tan\theta)$$

where

f is the lesser of (0.5 F_{tu}, or 0.6 F_{ty}), the least allowable tensile stress of the materials in the roof-to-shell joint;

F_{tu} is the Least Ultimate Strength of roof-to-shell joint material at maximum design temperature;

F_{ty} is the Least Yield Strength of roof-to-shell joint material at maximum design temperature.

AL.5.6.6 Self-Supporting Dome and Umbrella Roofs

a) The minimum nominal roof thickness is t_h.

$$t_h = 4.0 r_h \sqrt{\frac{p_h}{E}}$$

where

r_h is the roof radius

b) The minimum area of the roof-to-shell joint *is* A.

$$A = p_h D^2/(8f\tan\theta)$$

where

f is the lesser of (0.5 F_{tu}, or 0.6 F_{ty}), the least allowable tensile stress of the materials in the roof-to-shell joint;

F_{tu} is the Least Ultimate Strength of roof-to-shell joint material at maximum design temperature;

F_{ty} is the Least Yield Strength of roof-to-shell joint material at maximum design temperature.

AL.5.6.7 Structurally Supported Aluminum Dome Roofs

Structurally supported aluminum dome roofs shall meet Annex G.

AL.6 Fabrication

AL.6.1 Finish of Plate Edges

At least 3 mm (1/8 in.) shall be mechanically removed from edges of heat treatable alloys that have been plasma arc cut. Oxygen cutting shall not be used.

AL.6.2 Marking Materials

Marking materials shall not contain carbon or heavy metal compounds.

AL.7 Erection

AL.7.1 Welding Methods

Welding shall be gas metal arc welding, gas tungsten arc welding, plasma arc welding without using flux, or friction stir welding. The welding may be performed by the manual, machine, automatic, or semiautomatic welding processes according to procedures by welders or welding operators qualified in accordance with ASME Section IX or AWS D1.2.

AL.7.2 Preheating

Parts to be welded shall not be preheated except to the extent needed to drive off moisture or bring base metal temperature up to minimum welding temperature per 7.2.1.2.

AL.7.3 Plumbness

The plumbness requirements shall be per 7.5.2 except the out-of-plumbness in any shell course shall not exceed the flatness tolerance in ASTM B209M (B209).

AL.7.4 Storage

Aluminum parts shall not be stored in contact with one another when moisture is present. Aluminum shall not be stored or erected in contact with carbon steel or the ground.

AL.8 Examination of Welds

AL.8.1 Liquid Penetrant Examination

The following welds shall be examined by the liquid penetrant method before the hydrostatic test of the tank:

a) shell opening reinforcement and structural attachment plates, excluding lightly loaded attachments, that intersect a shell weld shall be examined for a distance of 150 mm (6 in.) on each side of the intersection and the butt weld for a distance of 50 mm (2 in.) beyond the pad weld;

b) all welds of openings in the shell that are not completely radiographed, including nozzle and manhole neck welds and neck-to-flange welds;

c) all butt-welded joints in tank shell and annular plate on which backing strips are to remain.

AL.8.2 Magnetic Particle Examination

Section 8.2 does not apply.

--`,,```,,,,````,,,,`,,,,,,```,,,`-`-`,,`,,`,`,,`---

AL.9 Welding Procedures and Welder Qualifications

Weld procedures and welder qualifications shall meet Section 9 except that impact tests are not required.

AL.10 Marking

AL.10.1 Material

In addition to the requirements of Section 10, the bottom and roof alloys shall be shown on the nameplate.

AL.11 Foundations

AL.11.1 Concrete

Aluminum shall not be placed in direct contact with concrete.

AL.12 Internal Pressure

AL.12.1 General

Annex F shall be met with the following exceptions.

AL.12.2 Design Pressure

The design internal pressure P in F.4.1:

$$P = \frac{8AF_{ty}\tan\theta}{(SF)D^2} + \rho_h t_h$$

where

F_{ty} is the tensile yield strength of the materials in the roof-to-shell joint;

SF is the safety factor = 1.6;

A is the area resisting the compressive force as illustrated in Figure F-2 except that $16t$ shall be replaced by $56t_s\sqrt{F_{ty}}$.

AL.12.3 Maximum Design Pressure

The maximum design pressure in F.4.2 shall be:

$$P_{\max} = \rho_h t_h + \frac{4W}{\pi D^2} - \frac{8(1.67)M}{\pi D^3}$$

where

$P_{\max}$ is the maximum design pressure;

M is the wind overturning moment.

AL.12.4 Required Compression Area at the Roof-to-Shell Junction

The required area at the roof-to-shell joint in F.5.1 shall be:

$$A = \frac{(SF)D^2(P - \rho_h t_h)}{8F_{ty}\tan\theta}$$

AL.12.5 Calculated Failure Pressure

The calculated failure pressure in F.6 shall be:

$$P_f = 1.6P - 0.6\rho_h t_h$$

AL.12.6 Anchored Tanks

The allowable compressive stress in F.7.2 shall be F_{ty}/1.6.

AL.13 Seismic Design

AL.13.1 General

Annex E shall be met with the following exceptions.

AL.13.2 Allowable Longitudinal Membrane Compression Stress in Shell

The allowable compressive stress in E.6.2.2.3 shall be determined in accordance with the ASME *Boiler and Pressure Vessel Code,* Section VIII, Division 1.

AL.14 External Pressure

AL.14.1 General

Annex V does not apply to aluminum tanks.

,,,

Annex B
(informative)

Recommendations for Design and Construction of Foundations for Aboveground Oil Storage Tanks

B.1 Scope

B.1.1 This Annex provides important considerations for the design and construction of foundations for aboveground steel oil storage tanks with flat bottoms. Recommendations are offered to outline good practice and to point out some precautions that should be considered in the design and construction of storage tank foundations.

B.1.2 Since there is a wide variety of surface, subsurface, and climatic conditions, it is not practical to establish design data to cover all situations. The allowable soil loading and the exact type of subsurface construction to be used must be decided for each individual case after careful consideration. The same rules and precautions shall be used in selecting foundation sites as would be applicable in designing and constructing foundations for other structures of comparable magnitude.

B.2 Subsurface Investigation and Construction

B.2.1 At any tank site, the subsurface conditions must be known to estimate the soil bearing capacity and settlement that will be experienced. This information is generally obtained from soil borings, load tests, sampling, laboratory testing, and analysis by an experienced geotechnical engineer familiar with the history of similar structures in the vicinity. The subgrade must be capable of supporting the load of the tank and its contents. The total settlement must not strain connecting piping or produce gauging inaccuracies, and the settlement should not continue to a point at which the tank bottom is below the surrounding ground surface. The estimated settlement shall be within the acceptable tolerances for the tank shell and bottom.

B.2.2 When actual experience with similar tanks and foundations at a particular site is not available, the following ranges for factors of safety should be considered for use in the foundation design criteria for determining the allowable soil bearing pressures. (The owner or geotechnical engineer responsible for the project may use factors of safety outside these ranges.)

a) From 2.0 to 3.0 against ultimate bearing failure for normal operating conditions.

b) From 1.5 to 2.25 against ultimate bearing failure during hydrostatic testing.

c) From 1.5 to 2.25 against ultimate bearing failure for operating conditions plus the maximum effect of wind or seismic loads.

B.2.3 Some of the many conditions that require special engineering consideration are as follows:

a) sites on hillsides, where part of a tank may be on undisturbed ground or rock and part may be on fill or another construction or where the depth of required fill is variable.

b) sites on swampy or filled ground, where layers of muck or compressible vegetation are at or below the surface or where unstable or corrosive materials may have been deposited as fill.

c) sites underlain by soils, such as layers of plastic clay or organic clays, that may support heavy loads temporarily but settle excessively over long periods of time.

d) sites adjacent to water courses or deep excavations, where the lateral stability of the ground is questionable.

e) sites immediately adjacent to heavy structures that distribute some of their load to the subsoil under the tank sites, thereby reducing the subsoil's capacity to carry additional loads without excessive settlement.

f) sites where tanks may be exposed to flood waters, possibly resulting in uplift, displacement, or scour.

g) sites in regions of high seismicity that may be susceptible to liquefaction.

h) sites with thin layers of soft clay soils that are directly beneath the tank bottom and that can cause lateral ground stability problems.

B.2.4 If the subgrade is inadequate to carry the load of the filled tank without excessive settlement, shallow or superficial construction under the tank bottom will not improve the support conditions. One or more of the following general methods should be considered to improve the support conditions.

a) Removing the objectionable material and replacing it with suitable, compacted material.

b) Compacting the soft material with short piles.

c) Compacting the soft material by preloading the area with an overburden of soil. Strip or sand drains may be used in conjunction with this method.

d) Stabilizing the soft material by chemical methods or injection of cement grout.

e) Transferring the load to a more stable material underneath the subgrade by driving piles or constructing foundation piers. This involves constructing a reinforced concrete slab on the piles to distribute the load of the tank bottom.

f) Constructing a slab foundation that will distribute the load over a sufficiently large area of the soft material so that the load intensity will be within allowable limits and excessive settlement will not occur.

g) Improving soil properties by vibro-compaction, vibro-replacement, or deep dynamic-compaction.

h) Slow and controlled filling of the tank during hydrostatic testing. When this method is used, the integrity of the tank may be compromised by excessive settlements of the shell or bottom. For this reason, the settlements of the tank shall be closely monitored. In the event of settlements beyond established ranges, the test may have to be stopped and the tank releveled.

B.2.5 The fill material used to replace muck or other objectionable material or to build up the grade to a suitable height shall be adequate for the support of the tank and product after the material has been compacted. The fill material shall be free of vegetation, organic matter, cinders, and any material that will cause corrosion of the tank bottom. The grade and type of fill material shall be capable of being compacted with standard industry compaction techniques to a density sufficient to provide appropriate bearing capacity and acceptable settlements. The placement of the fill material shall be in accordance with the project specifications prepared by a qualified geotechnical engineer.

B.3 Tank Grades

B.3.1 The grade or surface on which a tank bottom will rest should be constructed at least 0.3 m (1 ft) above the surrounding ground surface. This will provide suitable drainage, help keep the tank bottom dry, and compensate for some small settlement that is likely to occur. If a large settlement is expected, the tank bottom elevation shall be raised so that the final elevation above grade will be a minimum of 150 mm (6 in.) after settlement.

B.3.2 There are several different materials that can be used for the grade or surface on which the tank bottom will rest. To minimize future corrosion problems and maximize the effect of corrosion prevention systems such as

--`,,```,,,,````-`-`,,`,,`,`,,`---

cathodic protection, the material in contact with the tank bottom should be fine and uniform. Gravel or large particles shall be avoided. Clean washed sand 75 mm to 100 mm (3 in. to 4 in.) deep is recommended as a final layer because it can be readily shaped to the bottom contour of the tank to provide maximum contact area and will protect the tank bottom from coming into contact with large particles and debris. Large foreign objects or point contact by gravel or rocks could cause corrosion cells that will cause pitting and premature tank bottom failure.

During construction, the movement of equipment and materials across the grade will mar the graded surface. These irregularities should be corrected before bottom plates are placed for welding.

Adequate provisions, such as making size gradients in sublayers progressively smaller from bottom to top, should be made to prevent the fine material from leaching down into the larger material, thus negating the effect of using the fine material as a final layer. This is particularly important for the top of a crushed rock ringwall.

NOTE For more information on tank bottom corrosion and corrosion prevention that relates to the foundation of a tank, see API 651.

- **B.3.3** Unless otherwise specified by the Purchaser, the finished tank grade shall be crowned from its outer periphery to its center at a slope of 1 in. in 10 ft. The crown will partly compensate for slight settlement, which is likely to be greater at the center. It will also facilitate cleaning and the removal of water and sludge through openings in the shell or from sumps situated near the shell. Because crowning will affect the lengths of roof-supporting columns, it is essential that the tank Manufacturer be fully informed of this feature sufficiently in advance. (For an alternative to this paragraph, see B.3.4.)

- **B.3.4** As an alternative to B.3.3, the tank bottom may be sloped toward a sump. The tank Manufacturer must be advised as required in B.3.3.

B.4 Typical Foundation Types

B.4.1 Earth Foundations Without a Ringwall

B.4.1.1 When an engineering evaluation of subsurface conditions that is based on experience and/or exploratory work has shown that the subgrade has adequate bearing capacity and that settlements will be acceptable, satisfactory foundations may be constructed from earth materials. The performance requirements for earth foundations are identical to those for more extensive foundations. Specifically, an earth foundation should accomplish the following:

a) provide a stable plane for the support of the tank;

b) limit overall settlement of the tank grade to values compatible with the allowances used in the design of the connecting piping;

c) provide adequate drainage;

d) not settle excessively at the perimeter due to the weight of the shell wall.

B.4.1.2 Many satisfactory designs are possible when sound engineering judgment is used in their development. Three designs are referred to in this Annex on the basis of their satisfactory long-term performance. For smaller tanks, foundations can consist of compacted crushed stone, screenings, fine gravel, clean sand, or similar material placed directly on virgin soil. Any unstable material must be removed, and any replacement material must be thoroughly compacted. Two recommended designs that include ringwalls are illustrated in Figure B.1 and Figure B.2 and described in B.4.2 and B.4.3.

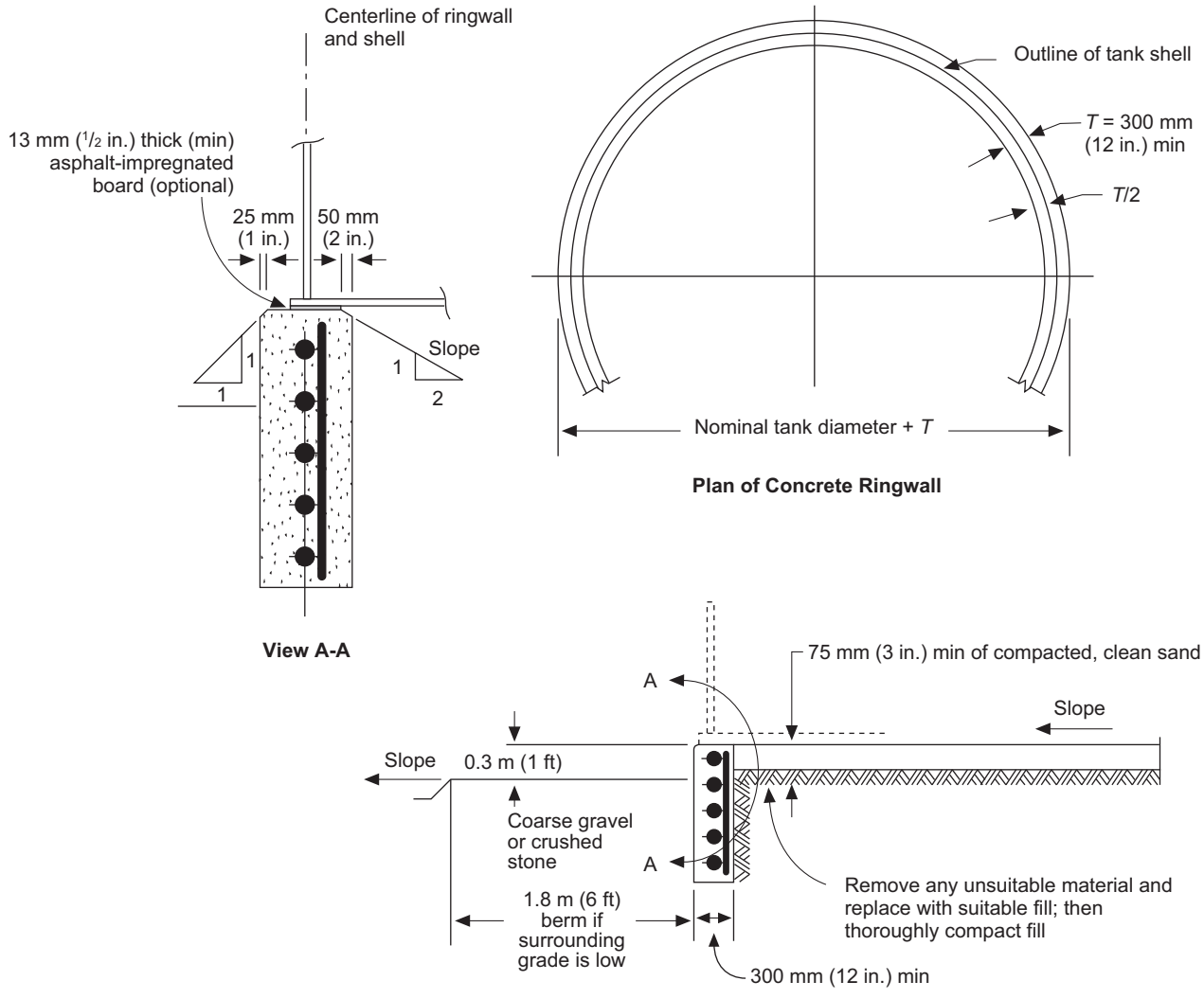

NOTE 1 See B.4.2.3 for requirements for reinforcement.

NOTE 2 The top of the concrete ringwall shall be smooth and level. The concrete strength shall be at least 20 MPa (3000 lbf/in.^{2}) after 28 days. Reinforcement splices must be staggered and shall be lapped to develop full strength in the bond. If staggering of laps is not possible, see ACI 318 for additional development requirements.

NOTE 3 Ringwalls that exceed 300 mm (12 in.) in width shall have rebars distributed on both faces.

NOTE 4 See B.4.2.2 for the position of the tank shell on the ringwall.

Figure B.1—Example of Foundation with Concrete Ringwall

B.4.2 Earth Foundations With a Concrete Ringwall

B.4.2.1 Large tanks and tanks with heavy or tall shells and/or self-supported roofs impose a substantial load on the foundation under the shell. This is particularly important with regard to shell distortion in floating-roof tanks. When there is some doubt whether a foundation will be able to carry the shell load directly, a concrete ringwall foundation should be used. As an alternative to the concrete ringwall noted in this section, a crushed stone ringwall (see B.4.3) may be used. A foundation with a concrete ringwall has the following advantages.

a) It provides better distribution of the concentrated load of the shell to produce a more nearly uniform soil loading under the tank.

b) It provides a level, solid starting plane for construction of the shell.

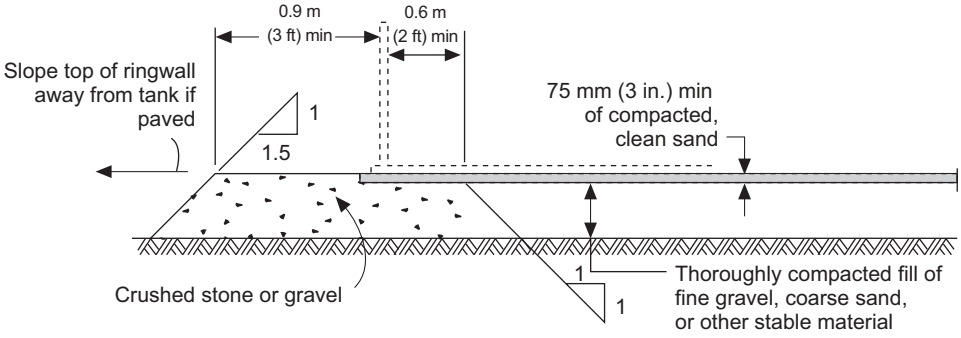

NOTE Any unsuitable material shall be removed and replaced with suitable fill; the fill shall then be thoroughly compacted.

Figure B.2—Example of Foundation with Crushed Stone Ringwall

c) It provides a better means of leveling the tank grade, and it is capable of preserving its contour during construction.

d) It retains the fill under the tank bottom and prevents loss of material as a result of erosion.

e) It minimizes moisture under the tank.

A disadvantage of concrete ringwalls is that they may not smoothly conform to differential settlements. This disadvantage may lead to high bending stresses in the bottom plates adjacent to the ringwall.

B.4.2.2 When a concrete ringwall is designed, it shall be proportioned so that the allowable soil bearing is not exceeded. The ringwall shall not be less than 300 mm (12 in.) thick. The centerline diameter of the ringwall should equal the nominal diameter of the tank; however, the ringwall centerline may vary if required to facilitate the placement of anchor bolts or to satisfy soil bearing limits for seismic loads or excessive uplift forces. The depth of the wall will depend on local conditions, but the depth must be sufficient to place the bottom of the ringwall below the anticipated frost penetration and within the specified bearing strata. As a minimum, the bottom of the ringwall, if founded on soil, shall be located 0.6 m (2 ft) below the lowest adjacent finish grade. Tank foundations must be constructed within the tolerances specified in 7.5.5. Recesses shall be provided in the wall for flush-type cleanouts, drawoff sumps, and any other appurtenances that require recesses.

B.4.2.3 A ringwall should be reinforced against temperature changes and shrinkage and reinforced to resist the lateral pressure of the confined fill with its surcharge from product loads. ACI 318 is recommended for design stress values, material specifications, and rebar development and cover. The following items concerning a ringwall shall be considered.

a) The ringwall shall be reinforced to resist the direct hoop tension resulting from the lateral earth pressure on the ringwall's inside face. Unless substantiated by proper geotechnical analysis, the lateral earth pressure shall be assumed to be at least 50 % of the vertical pressure due to fluid and soil weight. If a granular backfill is used, a lateral earth pressure coefficient of 30 % may be used.

b) The ringwall shall be reinforced to resist the bending moment resulting from the uniform moment load. The uniform moment load shall account for the eccentricities of the applied shell and pressure loads relative to the centroid of the resulting soil pressure. The pressure load is due to the fluid pressure on the horizontal projection of the ringwall inside the shell.

c) The ringwall shall be reinforced to resist the bending and torsion moments resulting from lateral, wind, or seismic loads applied eccentrically to it. A rational analysis, which includes the effect of the foundation stiffness, shall be used to determine these moments and soil pressure distributions.

d) The total hoop steel area required to resist the loads noted above shall not be less than the area required for temperature changes and shrinkage. The hoop steel area required for temperature changes and shrinkage is 0.0025 times the vertical cross-sectional area of the ringwall or the minimum reinforcement for walls called for in ACI 318, Chapter 14.

e) For ringwalls, the vertical steel area required for temperature changes and shrinkage is 0.0015 times the horizontal cross-sectional area of the ringwall or the minimum reinforcement for walls called for in ACI 318, Chapter 14. Additional vertical steel may be required for uplift or torsional resistance. If the ring foundation is wider than its depth, the design shall consider its behavior as an annular slab with flexure in the radial direction. Temperature and shrinkage reinforcement shall meet the ACI 318 provisions for slabs. (See ACI 318, Chapter 7.)

f) When the ringwall width exceeds 460 mm (18 in.), using a footing beneath the wall should be considered. Footings may also be useful for resistance to uplift forces.

g) Structural backfill within and adjacent to concrete ringwalls and around items such as vaults, undertank piping, and sumps requires close field control to maintain settlement tolerances. Backfill should be granular material compacted to the density and compacting as specified in the foundation construction specifications. For other backfill materials, sufficient tests shall be conducted to verify that the material has adequate strength and will undergo minimal settlement.

h) If the tank is designed and constructed for elevated temperature service, see B.6.

B.4.3 Earth Foundations With a Crushed Stone and Gravel Ringwall

B.4.3.1 A crushed stone or gravel ringwall will provide adequate support for high loads imposed by a shell. A foundation with a crushed stone or gravel ringwall has the following advantages.

a) It provides better distribution of the concentrated load of the shell to produce a more nearly uniform soil loading under the tank.

b) It provides a means of leveling the tank grade, and it is capable of preserving its contour during construction.

c) It retains the fill under the tank bottom and prevents loss of material as a result of erosion.

d) It can more smoothly accommodate differential settlement because of its flexibility.

A disadvantage of the crushed stone or gravel ringwall is that it is more difficult to construct it to close tolerances and achieve a flat, level plane for construction of the tank shell.

B.4.3.2 For crushed stone or gravel ringwalls, careful selection of design details is necessary to ensure satisfactory performance. The type of foundation suggested is shown in Figure B-2. Significant details include the following.

a) The 0.9 m (3 ft) shoulder and berm shall be protected from erosion by being constructed of crushed stone or covered with a permanent paving material.

b) Care shall be taken during construction to prepare and maintain a smooth, level surface for the tank bottom plates.

c) The tank grade shall be constructed to provide adequate drainage away from the tank foundation.

d) The tank foundation must be true to the specified plane within the tolerances specified in 7.5.5.

B.4.4 Slab Foundations

• **B.4.4.1** When the soil bearing loads must be distributed over an area larger than the tank area or when it is specified by the owner, a reinforced concrete slab shall be used. Piles beneath the slab may be required for proper tank support.

B.4.4.2 The structural design of the slab, whether on grade or on piles, shall properly account for all loads imposed upon the slab by the tank. The reinforcement requirements and the design details of construction shall be in accordance with ACI 318.

B.5 Tank Foundations for Leak Detection

Annex I provides recommendations on the construction of tank and foundation systems for the detection of leaks through the bottoms of storage tanks.

B.6 Tank Foundations for Elevated Temperature Service

The design and construction of foundations for tanks operating at elevated temperatures [> 93 °C (200 °F)] should address the following considerations.

a) When subjected to elevated operating temperatures, an unanchored tank may tend to move in one or more directions over time. This movement must be accommodated in the design of the tank fittings and attachments.

b) Elevated temperature service may evaporate moisture in the soil supporting the tank and lead to increased, and possibly non-uniform, settlement. Such settlement may include differential settlement between the ringwall and soil under the tank bottom immediately adjacent to the ringwall resulting from non-uniform shrinkage of the soil with respect to the stone or concrete ringwall.

c) In cases where there is high groundwater table, elevated temperatures may vaporize groundwater and generate undesirable steam.

d) Attachments between the tank and the foundation must accommodate the thermal expansion and contraction of the tank without resulting in unacceptable stress levels.

e) The elevated temperature must be accounted for in the design of concrete ringwall foundations. The ringwall is subject to a moment due to the higher temperature at the top of the ringwall with respect to the temperature at the bottom of the ringwall. If not adequately accounted for in the design of the ringwall, this moment can lead to cracking of the concrete foundation and loss of tank support.

--`,,```,,,,````,,,,`,,,,`,,,,,```,`,,`-`-`,,`,,`,`,,`---

Annex C
(normative)

External Floating Roofs

C.1 Scope

C.1.1 This Annex provides minimum requirements that, unless otherwise qualified in the text, apply to single-deck pontoon-type and double-deck-type floating roofs. See Section 3 for the definition of these roof types. This Annex is intended to limit only those factors that affect the safety and durability of the installation and that are considered to be consistent with the quality and safety requirements of this standard. Numerous alternative details and proprietary appurtenances are available; however, agreement between the Purchaser and the Manufacturer is required before they are used.

C.1.2 The type of roof and seal to be provided shall be as specified on the Data Sheet, Line 30. If the type is not specified, the Manufacturer shall provide a roof and seal that is cost-effective and suitable for the specified service. Pan-type floating roofs shall not be used.

C.1.3 The Purchaser is required to provide all applicable jurisdictional requirements that apply to external floating roofs (see 1.3).

C.1.4 See Annex W for bid requirements pertaining to external floating roofs.

C.2 Material

The material requirements of Section 4 shall apply unless otherwise stated in this Annex. Castings shall conform to any of the following specifications:

a) ASTM A27M, grade 405-205 (ASTM A27, grade 60-30), fully annealed;

b) ASTM A27M, grade 450-240 (ASTM A27, grade 65-35), fully annealed or normalized and tempered, or quenched and tempered;

c) ASTM A216M (ASTM A216) WCA, WCB, or WCC grades annealed and normalized, or normalized and tempered.

C.3 Design

C.3.1 General

C.3.1.1 The roof and accessories shall be designed and constructed so that the roof is allowed to float to the maximum design liquid level and then return to a liquid level that floats the roof well below the top of the tank shell without damage to any part of the roof, tank, or appurtenances. During such an occurrence, no manual attention shall be required to protect the roof, tank, or appurtenances. If a windskirt or top-shell extension is used, it shall contain the roof seals at the highest point of travel. The Purchaser shall provide appropriate alarm devices to indicate a rise of the liquid in the tank to a level above the normal and overfill protection levels (see NFPA 30 and API 2350). Overflow slots shall not be used as a primary means of detecting an overfill incident. If specified by the Purchaser (Table 4 of the Data Sheet), emergency overflow openings may be provided to protect the tank and floating roof from damage.

C.3.1.2 The application of corrosion allowances shall be a matter of agreement between the Purchaser and the Manufacturer. Corrosion allowance shall be added to the required minimum thickness or, when no minimum thickness is required, added to the minimum thickness required for functionality.

C.3.1.3 Sleeves and fittings that penetrate the single deck or lower decks of annular pontoons or lower decks of double-deck roofs, except for automatic bleeder vents, rim space vents, and leg sleeves, shall have a minimum wall thickness of "Standard Wall" for pipe NPS 6 and larger and 6 mm ($^1/_4$ in.) for all other pipe and plate construction unless otherwise specified on the Data Sheet, Table 5. Such penetrations shall extend into the liquid.

C.3.1.4 The annular space between the roof outer rim of the floating roof and the product side of the tank shell shall be designed for proper clearance of the peripheral seal (see C.3.13). All appurtenances and internal components of the tank shall have adequate clearance for the proper operation of the completed roof assembly.

• **C.3.1.5** For tanks greater than 60 m (200 ft) in diameter, the deck portion of single-deck pontoon floating roofs shall be designed to avoid flexural fatigue failure caused by design wind loads. Such designs shall be a matter of agreement between the Purchaser and the Manufacturer, using techniques such as underside stitch welding.

C.3.1.6 All conductive parts of the external floating roof shall be electrically interconnected and bonded to the outer tank structure. Bonding (grounding) shunts shall be provided on the external floating roof and shall be located above the uppermost seal. Shunts shall be 50-mm (2-in.) wide by 28-gauge (0.4-mm [$^1/_{64}$-in.] thick) austenitic stainless steel as a minimum, or shall provide equivalent corrosion resistance and current carrying capacity as stated in API 2003. Shunt spacing shall be no more than 3 m (10 ft). All movable cover accessories (hatches, manholes, pressure relief devices, and other openings) on the external floating roof shall be electrically bonded to the external floating roof to prevent static electricity sparking when they are opened.

C.3.2 Joints

C.3.2.1 Joints shall be designed as described in 5.1.

C.3.2.2 If a lining is applied to the underside of the roof, all joints that will have a lining shall be seal-welded.

C.3.3 Decks

C.3.3.1 Roofs in corrosive service, such as covering sour crude oil, should be the contact type designed to eliminate the presence of any air-vapor mixture under the deck.

C.3.3.2 Unless otherwise specified by the Purchaser, all deck plates shall have a minimum nominal thickness of 48 mm ($^3/_{16}$ in.) (permissible ordering basis—37.4 kg/m^2, 7.65 lbf/ft^2 of plate, 0.180-in. plate, or 7-gauge sheet).

C.3.3.3 Deck plates shall be joined by continuous full-fillet welds on the top side. On the bottom side, where flexure can be anticipated adjacent to girders, support legs, or other relatively rigid members, full-fillet welds not less than 50 mm (2 in.) long on 250 mm (10 in.) centers shall be used on any plate laps that occur within 300 mm (12 in.) of any such members. A minimum of three fillet welds shall be made.

C.3.3.4 Top decks of double-deck roofs and of pontoon sections, which are designed with a permanent slope shall be designed, fabricated, and erected (with a minimum slope of 1 in 64) to minimize accumulation of standing water (e.g. pooling adjacent to a rolling ladder's track) when primary roof drains are open. This requirement is not intended to completely eliminate isolated puddles. When out of service, water shall flow freely to the primary roof drains. These decks shall preferably be lapped to provide the best drainage. Plate buckles shall be kept to a minimum.

C.3.3.5 The deck of single-deck pontoon floating roofs shall be designed to be in contact with the liquid during normal operation, regardless of service. The design shall accommodate deflection of the deck caused by trapped vapor.

C.3.3.6 All covers for roof openings, except roof drains and vents, shall have gaskets or other sealing surfaces and shall be provided with a liquid-tight cover.

C.3.4 Pontoon Design

C.3.4.1 Floating roofs shall have sufficient buoyancy to remain afloat on liquid with a specific gravity of the lower of the product specific gravity or 0.7 and with primary drains inoperative for the following conditions.

a) 250 mm (10 in.) of rainfall in a 24-hour period over the full horizontal tank area with the roofs intact. This condition does not apply to double-deck roofs provided with emergency drains designed to keep water to a lesser volume that the roofs will safely support. Such emergency drains shall not allow the product to flow onto the roof.

NOTE The rainfall rate for sizing the roof drains in C.3.8 may result in a larger accumulated rainfall.

• b) Single-deck and any two adjacent pontoon compartments punctured and flooded in single-deck pontoon roofs and any two adjacent compartments punctured and flooded in double-deck roofs, both roof types with no water or live load.

With agreement by the Purchaser, Item b may be replaced by the following for floating roofs 6 m (20 ft) in diameter or less: Any one compartment punctured and flooded in single-deck pontoon roofs or double-deck roofs, both roof types with no water or live load.

• **C.3.4.2** The pontoon portions of single-deck pontoon-type roofs shall be designed to have adequate strength to prevent permanent distortion when the center deck is loaded by its design rainwater (C.3.4.1, Item a) or when the center deck and two adjacent pontoons are punctured (C.3.4.1, Item b). The allowable stress and stability criteria shall be jointly established by the Purchaser and the Manufacturer as part of the inquiry. Alternatively, a proof test simulating the conditions of C.3.4.1, with the roof floating on water, may be performed on the roof or on one of similar design that is of equal or greater diameter.

C.3.4.3 Any penetration of the floating roof shall not allow product to flow onto the roof under design conditions.

C.3.4.4 The sag of the roof deck under design conditions and the minimum design specific gravity (0.7) of the stored liquid shall be considered in establishing the minimum elevations of all roof penetrations.

C.3.5 Pontoon Openings

• Each compartment shall be provided with a liquid-tight manhole with a minimum nominal size of NPS 20. Manhole covers shall be provided with suitable hold-down fixtures (which may be of the quick-opening type) or with other means of preventing wind or fire-fighting hose streams from removing the covers. The top edge of the manhole necks shall be at an elevation that prevents liquid from entering the compartments under the conditions of C.3.4. With agreement by the Purchaser, floating roofs 6 m (20 ft) in diameter or less may be designed using a pontoon inspection port in place of a pontoon manhole.

Each compartment shall be vented to protect against internal or external pressure. Vents may be in the manhole cover, inspection port cover, or the top deck of the compartment. The vents shall be at an elevation that prevents liquid from entering the compartment under the conditions of C.3.4 and shall terminate in a manner that prevents entry of rain and fire-fighting liquids.

C.3.6 Compartments

Compartment plates are radial or circumferential dividers forming compartments that provide flotation for the roof (see C.3.4). All internal compartment plates (or sheets) shall be single-fillet welded along all of their edges, and other welding shall be performed at junctions as required to make each compartment leak tight. Each compartment weld shall be tested for leak tightness using internal pressure or a vacuum box and a soap solution or penetrating oil.

C.3.7 Ladders

- Unless otherwise specified by the Purchaser, the floating roof shall be supplied with a ladder that automatically adjusts to any roof position so that access to the roof is always provided. The ladder shall be designed for full-roof travel, regardless of the normal setting of the roof-leg supports. The ladder shall have full-length handrails on both sides and shall be designed for a 4450 N (1000 lbf) midpoint load with the ladder in any operating position. Step assemblies shall be of open type and have non-slip walking surfaces and self-leveling treads with a minimum width of 510 m (20 in.) and a 860 mm (34 in.) high handrail at the nose of the tread. When the roof is in its extreme low position, the slope of the rolling ladder shall not be less than 35 degrees to vertical, unless specified otherwise by the Purchaser. Wheels shall be provided at the lower end of the ladder, sized to prevent binding of the ladder, and provided with maintenance-free bearings. Ladders shall be grounded to both the roof and the gauger's platform with at least an AWG (American Wire Gage) 2/0 (67 sq. mm [0.104 sq. in.]), non-tangling cable. Cable shall be configured so that it will not freeze to adjacent surfaces in cold weather. Ladder and track design shall minimize ponding by using trussed runways or other details considering fatigue and stiffening effects resulting from supports. The Purchaser may elect to add requirements such as a wider stair width, lateral roof loading, and alternate runway designs that reduce ponding under the ladder.

C.3.8 Roof Drains

C.3.8.1 Primary Roof Drains

- 1) Primary roof drains shall be sized and positioned to accommodate the rainfall rates specified on the Data Sheet, Line 33, while preventing the roof from accumulating a water level greater than design, without allowing the roof to tilt excessively or interfere with its operation. Roof drains shall be furnished attached to double-flanged, low-type nozzles on the tank shell with valves to be supplied by the Purchaser. A swing-type check valve shall be provided at the inlet of drains unless otherwise specified on the Data Sheet, Line 32. The drains shall be removable, if required by the Purchaser. Primary roof drains shall not be smaller than NPS 3 for roofs with a diameter less than or equal 36 m (120 ft) or smaller than NPS 4 for roofs with a diameter greater than 36 m (120 ft).

2) Primary roof drains shall be resistant to the tank's contents, or suitably coated, and shall be free from floating, kinking, or catching on any internal appurtenance or obstruction during operation, and from being crushed by landing legs on the bottom.

- 3) The Purchaser shall specify, on the Data Sheet, Line 32, the required primary roof drain. Acceptable types of primary roof drains are:

   a) manufacturer's standard drain;

   b) steel swing or pivot-jointed pipe drains, designed and packed for external pressure;

   c) stainless steel armored hose.

4) If supplied, rigid segments of drain piping attached to the bottom or the roof shall be guided, not rigidly attached, to allow for differential thermal expansion and plate flexing. The design shall avoid being damaged by the roof support legs or other obstructions.

5) Siphon-type and non-armored hose-type drains are not acceptable as primary roof drains.

6) Double-deck floating roofs up to 60 m (200 ft) in diameter shall have either a single center sump or a reversed-slope, top-center deck with multiple sumps connected to a single drain line, depending on the design rainfall quantity and the roof configuration. Double-deck floating roofs larger than 60 m (200 ft) in diameter shall have a reversed-slope, top-center deck with multiple roof sumps having individual drain lines.

7) Inlets to single-deck primary roof drains shall have guarded trash stops or screens to stop debris from entering and obstructing the drain system. The Manufacturer shall provide isolation valves to stop product flow onto the roof when the check valve fails, unless specified otherwise on the Data Sheet, Line 32. Cut-off valves for this purpose shall have extension handles to permit actuation when puddles obstruct access to the valve.

8) When specified on the Data Sheet, Line 32, drains, sumps, check valves, and cut-off valves shall be protected from freeze damage by using special equipment designs. Any mechanically actuated cut-off valve shall permit actuation when the drain pipe is partially obstructed by chunk ice or slush (e.g., a ram valve or a metal-seated ball valve).

• **C.3.8.2 Emergency Roof Drains**

Double-deck roofs shall have a minimum of three open-ended emergency roof drains designed to provide drainage to prevent sinking the roof during severe rainfall events. Emergency drains are prohibited on single-deck floating roofs. Elevation of the emergency overflow drains shall be such that the outer rim cannot be completely submerged. These drains shall discharge at least 300 mm (1 ft) below the bottom of the roof and shall consist of open-ended pipes, braced as necessary to the roof structure. The drains shall be sized to handle the rainfall specified by the Purchaser, with a minimum diameter of NPS 4. The drains shall be sealed with a slit fabric seal or similar device that covers at least 90 % of the opening that will reduce the product-exposed surfaces while permitting rainwater passage. The drains shall be fabricated from Schedule 80 pipe, or heavier, and fittings with 6 mm ($^1/_4$-in.) thick roof deck reinforcing plates.

C.3.8.3 Out-of-Service Supplementary Drains

• Threaded pipe couplings and plugs with a 600-mm (24-in.) extension “T-bar” handle shall be provided as supplementary drains when the roof is resting on its legs and when the primary drains are inoperative. The number of drains shall be based on the specified rainfall rate (see Line 33 of the Data Sheet) and tank size. Fittings shall be at least NPS 4. Plugs shall have threads coated with a non-stick coating or anti-seize paste such as tetrafluoroethylene. One supplementary drain shall be located adjacent to the ladder track.

C.3.9 Vents

To prevent overstressing of the roof deck or seal membrane, automatic bleeder vents (vacuum breakers) shall be furnished for venting air to or from the underside of the deck when filling or emptying the tank. The Manufacturer shall determine and recommend the number and sizes of bleeder vents to be provided based on maximum filling and emptying rates specified. Each automatic bleeder vent (vacuum breaker vent) shall be closed at all times, except when required to be open to relieve excess pressure or vacuum, in accordance with the Manufacturer’s design. Each automatic bleeder vent (vacuum breaker vent) shall be equipped with a gasketed lid, pallet, flapper, or other closure device.

C.3.10 Supporting Legs

• **C.3.10.1** Floating roofs shall be provided with either removable or non-removable legs. If removable legs are specified on the Data Sheet, Line 32, the legs shall be adjustable from the top side of the roof. and designed to be inserted through either fixed low legs or leg sleeves. Both low and high legs shall have cutouts (minimum of 19 mm [$^3/_4$ in.] wide) at the bottom to permit drainage of trapped product. Removable covers shall be provided for leg sleeves or fixed low legs when the adjustable legs are removed. Adjustable legs shall be capped on top. If specified on the Data Sheet, Line 32, removable legs shall be provided with storage rack(s) on the top of the pontoon or deck appropriate for leg storage during normal operation or during maintenance. Rack quantity and location shall be determined by the Manufacturer to balance the roof live load and shall take into account the weight of the rolling ladder. The materials of construction shall be tabulated on the Data Sheet, Table 5. Removable legs shall be no smaller than NPS 2. High legs shall have a stop to prevent their dropping through the low legs during installation. See C.1.3 regarding Purchaser specification of jurisdictional requirements.

C.3.10.2 The legs and attachments shall be designed to support the roof and a uniform live load of at least 1.2 kPa (25 lbf/ft^2). Where possible, the roof load shall be transmitted to the legs through bulkheads or diaphragms. Leg attachments to single decks shall be given particular attention to prevent failures at the points of attachment.

C.3.10.3 Legs shall have settings for at least two levels:

a) a minimum setting determined by the Manufacturer to support the roof in the low-roof position while clearing mixers, nozzles, shell manholes, seals, and other components inside the tank by at least 75 mm (3 in.); and

• b) the minimum clearance of the roof in the high-roof position specified on the Data Sheet, Line 32.

When specified on the Data Sheet, Line 33, the two settings shall be field-adaptable to allow for uneven tank bottom settlement (i.e. constructed to permit small variations from the required positions for each leg).

• **C.3.10.4** Legs shall be Schedule 80 minimum and sleeves shall be Schedule 40 minimum unless specified otherwise on the Data Sheet, Table 5.

C.3.10.5 Roof legs shall have matching steel landing pads continuous full-fillet welded to the tank bottom with minimum dimensions of 10-mm ($^3/_8$-in.) thickness by 350-mm (14-in.) diameter. The centerline of the legs shall coincide with the centerline of the landing pads.

C.3.10.6 Roof support legs sleeves shall be installed plumb. Fixed legs or leg sleeves through single decks shall be reinforced.

C.3.10.7 All fixed leg or leg sleeve penetrations through the deck plate (top and bottom for pontoon and double-deck roofs) shall be attached to the deck plate(s) with continuous fillet welds made from the top side, as a minimum.

• **C.3.10.8** If specified (see C.1.3 regarding Purchaser specification of jurisdictional requirements), covers and seals shall be provided at all openings.

• **C.3.10.9** When side entry mixers are specified and there is inadequate clearance between the roof and mixer components, rather than increasing the leg lengths, the pontoon (or double deck) shall be notched with a recessed pocket providing at least 75 mm (3 in.) mixer component clearance at the low-roof position.

C.3.11 Roof Manholes

Roof manholes shall be provided for access to the tank interior and for ventilation when the tank is empty.

Manholes shall be located around the roof to provide an effective pattern for access, lighting, and ventilation of the product storage interior. Each manhole shall have a minimum nominal diameter of 600 mm (24 in.) and shall have a liquid-tight gasketed, bolted cover equivalent to the cover shown in Figure 5-16.

The minimum number of manholes shall be as follows:

Nominal Tank Diameter D, m (ft)	Minimum Number
$D \leq 61$ (200)	2
61 (200) < $D \leq 91$ (300)	3
91 (300) < D	4

C.3.12 Centering and Anti-rotation Devices

C.3.12.1 A guide pole shall be provided as an anti-rotation device for the floating roof. Locate the guide pole near the gauger's platform. The guide pole shall be capable of resisting the lateral forces imposed by the roof ladder, unequal snow loads, and wind loads.

C.3.12.2 Guide pole sections shall be welded with full penetration butt welds. Backing strips are not permitted. Provision must be made for draining and venting of unslotted pipe. See 7.5.2 for guide pole erection tolerance requirements.

- **C.3.12.3** The guide pole shall have all required emission control devices around the well opening where it penetrates the roof, such as those described in C.3.14.1, Item (1) and specified on the Data Sheet, Line 32. (See C.1.3 regarding Purchaser specification of jurisdictional requirement.)

C.3.13 Peripheral Seals

C.3.13.1 See H.4.4 for descriptions of peripheral seal types, selection guidelines, and additional requirements. Peripheral seals are also referred to as rim seals.

- **C.3.13.2** The Purchaser shall specify the seal materials in the Data Sheet, Table 5.

- **C.3.13.3** See C.1.3 regarding Purchaser specification of jurisdictional requirements. All seals shall be installed such that gaps between the seal and the shell of the tank meet the gap requirements of the jurisdiction for new construction, if any, and the Purchaser's gap requirements.

C.3.13.4 Installation and removal of peripheral seals shall not require draining the tank.

C.3.13.5 The specific requirements for external floating roof peripheral seals are:

- **a) Primary Seal**

The type of primary seal may be controlled by jurisdiction regulations. Types generally used are mechanical shoe seals and liquid-mounted (envelope) seals. Unless specified otherwise on the Data Sheet, Line 31, primary seals shall be the mechanical shoe type and shall be supplied and installed by the roof Manufacturer.

- **b) Secondary Seal**

The type of secondary seal may be controlled by jurisdiction regulations. If required by the Purchaser, a secondary seal shall be provided by the roof Manufacturer as specified on the Data Sheet, Line 31. Unless specified otherwise, secondary seals shall be the wiper type and shall be supplied and installed by the roof Manufacturer. The design of the secondary seal shall permit inspection of the primary seal without removal.

c) Mechanical Shoe Seals

The following additional requirements apply to mechanical shoe seals, if used, and which may be used as primary or secondary seals.

— The metal band (shoe) is typically formed as a series of sheets that are overlapped or joined together to form a ring that is held against the shell by a series of mechanical devices. For external floating roofs only, the mechanical shoe seal shoes shall extend at least 610 mm (24 in.) above and at least 100 mm (4 in.) into the liquid at the design flotation level, except when this type of seal is the secondary seal, installed above a primary seal. The "design flotation level" is defined as the roof position (under dead load conditions) for the specific gravity range from 0.7 to the design specific gravity on the Data Sheet.

C.3.14 Gauging Device

C.3.14.1 Each roof shall be provided with gauging ports with caps (gauging wells or hatches) as indicated on the Data Sheet, Line 32 (see C.1.3 regarding Purchaser specification of jurisdictional requirement), with one port located adjacent to the gauger's platform and remote from regions of turbulent flow. These ports may be as follows.

1) Slotted guide pole gauge wells: These are vertical anti-rotation pipes that can be used for gauging. Unless specified otherwise by the Purchaser, the pipe shall have two rows of 25-mm by 300-mm (1-in. by 12-in.) vertical slots on staggered 280-mm (11-in.) centers located 180 degrees apart. Slots shall range from the maximum fill height to near the tank bottom. Holes may be provided in lieu of slots if holes are required by the Purchaser. Well and pole shall be equipped with all required emission control devices, which may include items such as a gasketed sliding well cover, and a pole wiper, as well as either a pole sleeve or a pole float and float wiper (see API *MPMS* Ch. 19.2 for requirements and illustrations of some of these devices). If there are no slots or holes located so as to allow the stored liquid to flow into the pole at liquid levels above the lowest operating level, then the pole is not considered slotted for purposes of air regulation compliance (even if there are slots or holes located below the lowest operating level).

2) Non-guide pole gauge wells: These shall be NPS 8 pipes projecting at least 150 mm (6 in.) above the roof's outer rim. For sample hatches without gauging apparatus, see C.3.15.3.

C.3.14.2 Each gauge well shall have a B16.5 Class 150 bolt pattern, flat-face pipe flange with a full-face gasket at its top, and shall be attached to a non-sparking cap. See C.1.3 regarding Purchaser specification of jurisdictional requirements.

C.3.14.3 Each gauge well shall have a permanent gauge mark or tab just inside the cap on the pipe wall called a "reference point" or "knife edge."

C.3.14.4 When specified on the Data Sheet, Line 32, a datum plate shall be attached to the bottom of the slotted guide pole at the distance designated by the Purchaser.

C.3.14.5 If striking plates are specified on the Data Sheet, Line 32, they shall be provided on the tank bottom beneath the guide pole or under the gauge well if no guide pole is specified.

C.3.14.6 A gauger's platform shall be located at an elevation that remains above and clear of the roof, its sealing system, and foam dam even during an overflow event. The Purchaser shall specify the platform location on the Data Sheet Plan. The direction is typically upwind of the direction of the prevailing wind.

C.3.15 Inlet Diffuser

Supply inlet diffusers if required on the Data Sheet. (also see 5.8.11.2)

C.3.16 Other Roof Accessories

C.3.16.1 Wax Scrapers

If wax scrapers are specified on the Data Sheet, Line 31, they shall be located such that the scraping action occurs below the liquid surface. Design of wax scrapers shall not interfere with bottom shell course accessories.

C.3.16.2 Foam Dams

A foam dam, if specified on the Data Sheet, Line 32, shall be installed on top plates of pontoon or roof deck at least 300 mm (12 in.) but no more than 600 mm (24 in.) from the tank shell to contain foam fire-fighting solution. The foam dam shall be a minimum of 300 mm (12 in.) high and extend at least 50 mm (2 in.) above the lower of the secondary

seal or any burnout panel, measured at its highest contact point with the shell. The dam shall be fabricated from 10 gauge (0.134 in.) or thicker steel plate with support braces installed on the side of the foam dam closest to the center of the tank at a circumferential spacing of approximately 1.5 m (5 ft) on center. Bottom of plate shall have 10-mm ($^3/_8$-in.) slotted weep holes. The dam shall be attached to the top deck plate by a continuous fillet weld on the foam side. See NFPA 11 for additional information regarding foam dams.

C.3.16.3 Sample Hatches

If specified on the Data Sheet, Line 32, the Manufacturer shall install an NPS 8 sample hatch with funnel on the roof deck with remote access from the gauging platform. Manufacturer shall install a recoil reel on the gauging platform. The hatch shall be equipped with a self-closing liquid-tight cover that can be opened and closed from the gauger's platform.

C.3.16.4 Automatic Level Gauge

a) Tanks shall have a ground-level reading, automatic float-level gauge, unless otherwise specified on the Data Sheet, Table 4.

b) Access for maintenance and repair shall be considered.

c) Level gauge shall be located such that the float well is away from any appurtenances that produce turbulence.

d) The bottom of the float well shall be approximately 150 mm (6 in.) above the tank bottom when the floating roof is at its lowest position.

e) Gauge float wells shall be equipped with a gasketed cover that is bolted closed. See C.1.3 regarding Purchaser specification of jurisdictional requirements.

C.3.16.5 Side Entry Mixers

a) Mixers shall conform to the Data Sheet, Line 26.

b) Each mixer shall be installed in cover plates in dedicated shell nozzles or manholes.

C.4 Fabrication, Erection, Welding, Inspection, and Testing

C.4.1 The applicable fabrication, erection, welding, examination, and testing requirements of this standard shall apply.

C.4.2 Deck seams and other joints that are required to be liquid- or vapor-tight shall be examined for leaks by means of penetrating oil or any other method consistent with the methods described in this standard for testing cone-roof seams and tank-bottom seams.

C.4.3 The roof shall be given a flotation test while the tank is being filled with water and emptied. During this test, the upper side of the lower deck shall be examined for leaks. The appearance of a damp spot on the upper side of the lower deck shall be considered evidence of leakage.

C.4.4 The upper side of the upper decks of pontoon and double-deck roofs shall be visually examined for pinholes and defective welding.

C.4.5 Drainpipe and hose systems of primary drains shall be tested with water at a pressure of 350 kPa (50 lbf/in.^{2}) gauge. During the flotation test, the roof drain valves shall be kept open and observed for leakage of the tank contents into the drain lines.

Annex D
(informative)

Inquiries and Suggestions for Change

D.1 Introduction

This Annex describes the process established by API for 1) submitting inquiries to API, and 2) for submitting suggestions for changes to this standard. Inquiries and suggestions for change are welcome and encouraged, because they provide useful reader feedback to the responsible API Committee regarding technical accuracy, current technology use, clarity, consistency, and completeness of the standard. API will attempt to answer all valid inquiries. Submittals not complying with this Annex will be returned unanswered.

Sections 2 through 8 below cover the submitting of inquiries. See Section 9 for instructions about submitting suggestions for change.

D.2 Inquiry References

D.2.1 API maintains several websites that provide information that should be reviewed before submitting an inquiry.

D.2.2 Your inquiry may have been previously addressed by the Subcommittee and the resulting interpretation posted on the API web site as follows:

For all standards: http://mycommittees.api.org/standards/techinterp/default.aspx

For Refining Standards: http://mycommittees.api.org/standards/techinterp/refequip/default.aspx

For both links, click on the standard in question to download the file.

D.2.3 In addition, an addendum or errata, which may have addressed your issue, can be found on the API web site as follows:

For all standards: http://www.api.org/standards/addenda/

For Refining Standards: http://www.api.org/standards/addenda/add-ref.cfm

D.3 Definitions

D.3.1
inquiry
A question that asks what is the meaning of a specific paragraph, figure, or table in the standard; i.e. what do the words say. It is not a question that asks about the intention of the standard.

D.3.2
interpretation
The answer to the inquiry. Typically, the answer is simply a “Yes” or “No” response, with a brief clarification if needed. This term is also used to refer to the combined question and answer.

D.4 API Policy Regarding Inquiries

D.4.1 API has established the following limits on its activity in the handling of inquiries.

a) API does not approve, certify, rate, or endorse any item, construction, proprietary device, or activity.

b) API does not act as a consultant on specific engineering problems.

c) API does not provide information on the general understanding or application of the standard.

D.4.2 All inquiries and resulting interpretations will be made available to the public on the API website.

D.5 Submission of Inquiries

D.5.1 An electronic form for submitting a request can be found on the API Web site at http://rfi.api.org/. Please use this means to submit your inquiry.

D.5.2 All inquiries must comply with the following.

a) Current standard: If an inquiry refers to a version or addendum that is not the latest, the Subcommittee will develop the interpretation based on the requirements stated in the current version.

b) Specific Reference: The applicable paragraph number, figure number, or table number must be cited in the inquiry.

c) Sentence Structure: Inquiries must be written such that the answer can be a YES or NO, with technical details added if necessary. The inquiry statement should be technically and editorially correct, and written in understandable English.

d) Background: Providing a background explanation is optional, but is encouraged to assist the committee in understanding the query.

e) Single Subject: The scope of an inquiry shall be limited to a single subject or a group of closely related subjects.

f) General Format:

1) The general format of the inquiry should be as follows: “Does Paragraph XXX of API-6XX require that ….?”

2) The inquirer shall state what is required in his or her option, as the answer to the query.

3) If a revision to the standard is believed to also be needed, provide recommended wording.

g) The Inquirer should not use the inquiry process to improve his general understanding, design skills, and usage of the standard. Consultants not affiliated with API are available for this purpose.

h) It is important that the Inquirer understand the difference between an inquiry and a suggestion for change. API encourages both, but the submittal and committee handling procedures are different.

D.5.3 General guidelines for submission can also be found on the API web site at:

http://www.api.org/Publications-Standards-and-Statistics/FAQs-and-Inquiries/FAQs/Technical-Question/Guidelines-for-submission.aspx

D.6 Typical Inquiry Procedure

D.6.1 The typical procedure of an inquiry is as follows.

a) The Inquirer must prepare the inquiry, including any necessary background information, in full compliance with this Annex and submit to the API Standards Coordinator.

b) API Standards Coordinator checks the inquiry to verify compliance with the requirements of submitting an inquiry.

c) If the inquiry cannot be answered for any reason, the Coordinator will issue a response to the inquirer advising the reason(s) for not answering the inquiry. A form or checklist will typically be used for this response.

d) If the Coordinator believes the inquiry is valid, it will be forwarded to the Subcommittee for study, and the inquirer will be so advised using the form letter.

e) The Subcommittee will evaluate the inquiry and either develop a response or determine that the inquiry cannot be answered, and advise the Coordinator accordingly. The Subcommittee will consider the need for modifying the standard to resolve technical issues, add new requirements, make editorial corrections, improve clarity, remove conflicts, etcetera.

f) The interpretation will be published on the API website when approved by the Subcommittee.

D.6.2 The time required to process a valid inquiry as described in 6.1 may take as long as a year.

D.7 Interpretations Responding to Inquiries

D.7.1 An interpretation is written by the Subcommittee to provide the specific answer to an inquiry. It typically will not state the intent of the standard, nor give reasons for the requirements, nor give historical bases, nor provide overall understanding of the standard. If the inquiry is properly phrased, the interpretation can be a one-word response. With many inquiries, there may be a need to provide clarifying statements, such as the limits on the applicability.

D.7.2 Although it is not possible to develop interpretations quickly to remedy immediate needs, the industry benefits as a whole when inquiries are utilized as a means of trying to understand the technical requirements in the standard.

D.8 Form Response Sent to Inquirer

D.8.1 A form letter or email will be used to reply to inquirers indicating the action taken by API, and, if applicable, the reason(s) for not being able to accept the inquiry.

D.8.2 Reasons for not being able to accept an inquiry may include:

a) Not Current Standard

b) No Specific Reference

c) Unclear Sentences

d) Inadequate Background Information

e) Unrelated Subjects

f) Format

g) Application to a Specific Tank

h) Consultant Question

D.9 Suggestions for Changes

D.9.1 A “Suggestion for Change” is not an inquiry; it is simply a communication (email preferred) from a reader to API proposing that a specific change be made to the standard.

D.9.2 Any format is acceptable, as long as the content is clear.

D.9.3 The most effective means to submit suggestions is to send an email to the API Coordinator (standards@api.org).

D.9.4 The content of a suggestion must include the standard number, edition, and addendum in question. The relevant paragraph numbers, table number, figure number, etc must also be stated. Provide as much explanation as necessary to be sure the Subcommittee understands the technical issues. Provide specific language that you think is needed to implement the change. Last, include your name, company affiliation if any, and your return email or mailing address.

D.9.5 API will forward all suggestions that are suitably written to the Subcommittee for consideration. The Subcommittee will evaluate each suggestion and determine if a change is needed. Suggestions that are accepted by the Subcommittee will be reflected in a future edition or addenda, but a reply advising the submitter of the Subcommittee's decision may not be issued.

Annex E
(normative)

Seismic Design of Storage Tanks

This annex provides a number of design options requiring decisions by the Purchaser; standard requirements; recommendations; and information that supplements the basic standard. This annex becomes a requirement only when the Purchaser specifies an option covered by this annex or specifies the entire annex.

Part I—Provisions

E.1 Scope

This Annex provides minimum requirements for the design of welded steel storage tanks that may be subject to seismic ground motion. These requirements represent accepted practice for application to welded steel flat-bottom tanks supported at grade.

The fundamental performance goal for seismic design in this Annex is the protection of life and prevention of catastrophic collapse of the tank. Application of this standard does not imply that damage to the tank and related components will not occur during seismic events.

This Annex is based on the allowable stress design (ASD) methods with the specific load combinations given herein. Application of load combinations from other design documents or codes is not recommended, and may require the design methods in this Annex be modified to produce practical, realistic solutions. The methods use an equivalent lateral force analysis that applies equivalent static lateral forces to a linear mathematical model of the tank based on a rigid wall, fixed based model.

The ground motion requirements in this Annex are derived from ASCE 7, which is based on a maximum considered earthquake ground motion defined as the motion due to an event with a 2 % probability of exceedance within a 50-year period (a recurrence interval of approximately 2500 years). Application of these provisions as written is deemed to meet the intent and requirements of ASCE 7. Accepted techniques for applying these provisions in regions or jurisdictions where the regulatory requirements differ from ASCE 7 are also included.

The pseudo-dynamic design procedures contained in this Annex are based on response spectra analysis methods and consider two response modes of the tank and its contents—impulsive and convective. Dynamic analysis is not required nor included within the scope of this Annex. The equivalent lateral seismic force and overturning moment applied to the shell as a result of the response of the masses to lateral ground motion are determined. Provisions are included to assure stability of the tank shell with respect to overturning and to resist buckling of the tank shell as a result of longitudinal compression.

The design procedures contained in this Annex are based on a 5 % damped response spectra for the impulsive mode and 0.5 % damped spectra for the convective mode supported at grade with adjustments for site-specific soil characteristics. Application to tanks supported on a framework elevated above grade is beyond the scope of this Annex. Seismic design of floating roofs is beyond the scope of this Annex.

Optional design procedures are included for the consideration of the increased damping and increase in natural period of vibration due to soil-structure interaction for mechanically-anchored tanks.

Tanks located in regions where S_1 is less than or equal to 0.04 and S_S less than or equal to 0.15, or the peak ground acceleration for the ground motion defined by the regulatory requirements is less than or equal to $0.05g$, need not be designed for seismic forces; however, in these regions, tanks in SUG III shall comply with the freeboard requirements of this Annex.

Dynamic analysis methods incorporating fluid-structure and soil-structure interaction are permitted to be used in lieu of the procedures contained in this Annex with Purchaser approval and provided the design and construction details are as safe as otherwise provided in this Annex.

E.2 Definitions and Notations

E.2.1 Definitions

E.2.1.1
active fault
A fault for which there is an average historic slip rate of 1 mm (0.4 in.) per year or more and geologic evidence of seismic activity within Holocene times (past 11,000 years).

E.2.1.2
characteristic earthquake
An earthquake assessed for an active fault having a magnitude equal to the best-estimate of the maximum magnitude capable of occurring on the fault, but not less than the largest magnitude that has occurred historically on the fault.

E.2.1.3
maximum considered earthquake
MCE
The most severe earthquake ground motion considered in this Annex.

E.2.1.4
mechanically-anchored tank
Tanks that have anchor bolts, straps or other mechanical devices to anchor the tank to the foundation.

E.2.1.5
self-anchored tank
Tanks that use the inherent stability of the self-weight of the tank and the stored product to resist overturning forces.

E.2.1.6
site class
A classification assigned to a site based on the types of soils present and their engineering properties as defined in this Annex.

E.2.2 Notations

A Lateral acceleration coefficient, %g

A_c Convective design response spectrum acceleration parameter, = ($^2/_3$) x 0.7 x S_{DS} = 0.47 S_{DS}, %g

A_f Acceleration coefficient for sloshing wave height calculation, %g

A_i Impulsive design response spectrum acceleration coefficient, %g

A_v Vertical earthquake acceleration parameter = ($^2/_3$) x 0.7 x S_{DS} = 0.47 S_{DS}, %g

C_d Deflection amplification factor, C_d = 2

C_i Coefficient for determining impulsive period of tank system

D Nominal tank diameter, m (ft)

d_c Total thickness (100 – d_s) of cohesive soil layers in the top 30 m (100 ft)

d_i Thickness of any soil layer i (between 0 and 30 m [100 ft])

d_s Total thickness of cohesionless soil layers in the top 30 m (100 ft)

E Elastic Modulus of tank material, MPa (lbf/in.^{2})

F_a Acceleration-based site coefficient (at 0.2 sec period)

F_c Allowable longitudinal shell-membrane compression stress, MPa (lbf/in.^{2})

F_{ty} Minimum specified yield strength of shell course, MPa (lbf/in.^{2})

F_v Velocity-based site coefficient (at 1.0 sec period)

F_y Minimum specified yield strength of bottom annulus, MPa (lbf/in.^{2})

G Specific gravity

g Acceleration due to gravity in consistent units, m/sec^2 (ft/sec^2)

G_e Effective specific gravity including vertical seismic effects = G (1 – 0.4A_v)

H Maximum design product level, m (ft)

H_S Thickness of soil, m (ft)

I Importance factor coefficient set by seismic use group

J Anchorage ratio

K Coefficient to adjust the spectral acceleration from 5 % to 0.5 % damping = 1.5 unless otherwise specified

L Required minimum width of thickened bottom annular ring measured from the inside of the shell m (ft)

L_s Selected width of annulus (bottom or thickened annular ring) to provide the resisting force for self anchorage, measured from the inside of the shell m (ft)

t_a Thickness, excluding corrosion allowance, mm (in.) of the bottom annulus under the shell required to provide the resisting force for self anchorage. The bottom plate for this thickness shall extend radially at least the distance, L, from the inside of the shell. This term applies for self-anchored tanks only.

M_{rw} Ringwall moment—Portion of the total overturning moment that acts at the base of the tank shell perimeter, Nm (ft-lb)

M_s Slab moment (used for slab and pile cap design), Nm (ft-lb)

N Standard penetration resistance, ASTM D1586

N Average field standard penetration test for the top 30 m (100 ft)

--`,,,`````,,,,,,,,,,,,`,,,,,,,,,,,,

n_A Number of equally-spaced anchors around the tank circumference

N_c Convective hoop membrane force in tank shell, N/mm (lbf/in.)

N_{ch} Average standard penetration of cohesionless soil layers for the top 30 m (100 ft)

N_h Product hydrostatic membrane force, N/mm (lbf/in.)

N_i Impulsive hoop membrane force in tank shell, N/mm (lbf/in.)

P_A Anchorage attachment design load, N (lbf)

P_{AB} Anchor design load, N (lbf)

Pf Overturning bearing force based on the maximum longitudinal shell compression at the base of shell, N/m (lbf/ft)

PI Plasticity index, ASTM D4318

Q Scaling factor from the MCE to the design level spectral accelerations; equals $^2/_3$ for ASCE 7

R Force reduction coefficient for strength level design methods

R_{wc} Force reduction coefficient for the convective mode using allowable stress design methods

R_{wi} Force reduction factor for the impulsive mode using allowable stress design methods

S_0 Mapped, maximum considered earthquake, 5 % damped, spectral response acceleration parameter at a period of zero seconds (peak ground acceleration for a rigid structure), %g

S_1 Mapped, maximum considered earthquake, 5 % damped, spectral response acceleration parameter at a period of one second, %g

S_a The 5 % damped, design spectral response acceleration parameter at any period based on mapped, probabilistic procedures, %g

S_a^* The 5 % damped, design spectral response acceleration parameter at any period based on site-specific procedures, %g

S_{a0}^* The 5 % damped, design spectral response acceleration parameter at zero period based on site-specific procedures, %g

S_{D1} The design, 5 % damped, spectral response acceleration parameter at one second based on the ASCE 7 methods, equals $Q\,F_v\,S_1$, %g

S_{DS} The design, 5% damped, spectral response acceleration parameter at short periods (T = 0.2 seconds) based on ASCE 7 methods, equals $Q\,F_a\,S_s$, %g

S_P Design level peak ground acceleration parameter for sites not addressed by ASCE methods. [See EC Example Problem 2 when using "Z" factor from earlier editions of API 650 and UBC. Since 475 year recurrence interval is basis of this peak ground acceleration, Q = 1.0 (no scaling).]

S_S Mapped, maximum considered earthquake, 5% damped, spectral response acceleration parameter at short periods (0.2 sec), %g

s_u Undrained shear strength, ASTM D2166 or ASTM D2850

s_u Average undrained shear strength in top 30 m (100 ft)

t Thickness of the shell ring under consideration, mm (in.)

t_a Thickness, excluding corrosion allowance, mm (in.) of the bottom annulus under the shell required to provide the resisting force for self anchorage. The bottom plate for this thickness shall extend radially at least the distance, L, from the inside of the shell. this term applies for self-anchored tanks only.

t_b Thickness of tank bottom less corrosion allowance, mm (in.)

t_s Thickness of bottom shell course less corrosion allowance, mm (in.)

t_u Equivalent uniform thickness of tank shell, mm (in.)

T Natural period of vibration of the tank and contents, seconds

T_C Natural period of the convective (sloshing) mode of behavior of the liquid, seconds

T_i Natural period of vibration for impulsive mode of behavior, seconds

T_L Regional-dependent transition period for longer period ground motion, seconds

T_0 $0.2\,F_v S_1 / F_a S_S$

T_S $F_v S_1 / F_a S_S$

V Total design base shear, N (lbf)

V_c Design base shear due to the convective component of the effective sloshing weight, N (lbf)

v_s Average shear wave velocity at large strain levels for the soils beneath the foundation, m/s (ft/s)

v_s Average shear wave velocity in top one 30 m (100 ft), m/s (ft/s)

V_i Design base shear due to impulsive component from effective weight of tank and contents, N (lbf)

w Moisture content (in %), ASTM D2216

w_a Force resisting uplift in annular region, N/m (lbf/ft)

w_{AB} Calculated design uplift load on anchors per unit circumferential length, N/m (lbf/ft)

W_c Effective convective (sloshing) portion of the liquid weight, N (lbf)

W_{eff} Effective weight contributing to seismic response

W_f Weight of the tank bottom, N (lbf)

W_{fd} Total weight of tank foundation, N (lbf)

W_g Weight of soil directly over tank foundation footing, N (lbf)

W_i Effective impulsive portion of the liquid weight, N (lbf)

w_{int} Calculated design uplift load due to product pressure per unit circumferential length, N/m (lbf/ft)

W_p Total weight of the tank contents based on the design specific gravity of the product, N (lbf)

W_r Total weight of fixed tank roof including framing, knuckles, any permanent attachments and 10 % of the roof design snow load, N (lbf)

W_{rs} Roof load acting on the tank shell including 10 % of the roof design snow load, N (lbf)

w_{rs} Roof load acting on the shell, including 10 % of the specified snow load N/m (lbf/ft)

W_s Total weight of tank shell and appurtenances, N (lbf)

W_T Total weight of tank shell, roof, framing, knuckles, product, bottom, attachments, appurtenances, participating snow load, if specified, and appurtenances, N (lbf)

w_t Tank and roof weight acting at base of shell, N/m (lbf/ft)

X_c Height from the bottom of the tank shell to the center of action of lateral seismic force related to the convective liquid force for ringwall moment, m (ft)

X_{cs} Height from the bottom of the tank shell to the center of action of lateral seismic force related to the convective liquid force for the slab moment, m (ft)

X_i Height from the bottom of the tank shell to the center of action of the lateral seismic force related to the impulsive liquid force for ringwall moment, m (ft)

X_{is} Height from the bottom of the tank shell to the center of action of the lateral seismic force related to the impulsive liquid force for the slab moment, m (ft)

X_r Height from the bottom of the tank shell to the roof and roof appurtenances center of gravity, m (ft)

X_s Height from the bottom of the tank shell to the shell's center of gravity, m (ft)

Y Distance from liquid surface to analysis point, (positive down), m (ft)

y_u Estimated uplift displacement for self-anchored tank, mm (in.)

σ_c Maximum longitudinal shell compression stress, MPa (lbf/in.^{2})

σ_h Product hydrostatic hoop stress in the shell, MPa (lbf/in.^{2})

σ_s Hoop stress in the shell due to impulsive and convective forces of the stored liquid, MPa (lbf/in.^{2})

σ_T Total combined hoop stress in the shell, MPa (lbf/in.^{2})

μ Friction coefficient for tank sliding

ρ Density of fluid, kg/m^3 (lb/ft^3)

E.3 Performance Basis

E.3.1 Seismic Use Group

- The Seismic Use Group (SUG) for the tank shall be specified by the Purchaser. If it is not specified, the SUG shall be assigned to be SUG I.

E.3.1.1 Seismic Use Group III

SUG III tanks are those providing necessary service to facilities that are essential for post-earthquake recovery and essential to the life and health of the public; or, tanks containing substantial quantities of hazardous substances that do not have adequate control to prevent public exposure.

E.3.1.2 Seismic Use Group II

SUG II tanks are those storing material that may pose a substantial public hazard and lack secondary controls to prevent public exposure, or those tanks providing direct service to major facilities.

E.3.1.3 Seismic Use Group I

SUG I tanks are those not assigned to SUGs III or II.

E.3.1.4 Multiple Use

Tanks serving multiple use facilities shall be assigned the classification of the use having the highest SUG.

E.4 Site Ground Motion

Spectral lateral accelerations to be used for design may be based on either “mapped” seismic parameters (zones or contours), “site-specific” procedures, or probabilistic methods as defined by the design response spectra method contained in this Annex. A method for regions outside the USA where ASCE 7 methods for defining the ground motion may not be applicable is also included.

A methodology for defining the design spectrum is given in the following sections.

E.4.1 Mapped ASCE 7 Method

- For sites located in the USA, or where the ASCE 7 method is the regulatory requirement, the maximum considered earthquake ground motion shall be defined as the motion due to an event with a 2 % probability of exceedance within a 50-year period. The following definitions apply.

  — S_S is the mapped, maximum considered earthquake, 5 % damped, spectral response acceleration parameter at short periods (0.2 seconds).

  — S_1 is the mapped, maximum considered earthquake, 5 % damped, spectral response acceleration parameter at a period of 1 second.

  — S_0 is the mapped, maximum considered earthquake, 5 % damped, spectral response acceleration parameter at zero seconds (usually referred to as the peak ground acceleration). Unless otherwise specified or determined, S_0 shall be defined as $0.4S_S$ when using the mapped methods.

E.4.2 Site-Specific Spectral Response Accelerations

The design method for a site-specific spectral response is based on the provisions of ASCE 7. Design using site-specific ground motions should be considered where any of the following apply.

— The tank is located within 10 km (6 miles) of a known active fault.

— The structure is designed using base isolation or energy dissipation systems, which is beyond the scope of this Annex.

— The performance requirements desired by the owner or regulatory body exceed the goal of this Annex.

Site-specific determination of the ground motion is required when the tank is located on Site Class F type soils.

- If design for an MCE site-specific ground motion is desired, or required, the site-specific study and response spectrum shall be provided by the Purchaser as defined this section.

However, in no case shall the ordinates of the site-specific MCE response spectrum defined be less than 80 % of the ordinates of the mapped MCE response spectra defined in this Annex.

E.4.2.1 Site-Specific Study

A site-specific study shall account for the regional tectonic setting, geology, and seismicity. This includes the expected recurrence rates and maximum magnitudes of earthquakes on known faults and source zones, the characteristics of ground motion attenuation, near source effects, if any, on ground motions, and the effects of subsurface site conditions on ground motions. The study shall incorporate current scientific interpretations, including uncertainties, for models and parameter values for seismic sources and ground motions.

If there are known active faults identified, the maximum considered seismic spectral response acceleration at any period, S_a^*, shall be determined using both probabilistic and deterministic methods.

E.4.2.2 Probabilistic Site-Specific MCE Ground Motion

The probabilistic site-specific MCE ground motion shall be taken as that motion represented by a 5 % damped acceleration response spectrum having a 2 % probability of exceedance in a 50-year period.

E.4.2.3 Deterministic Site-Specific MCE Ground Motion

The deterministic site-specific MCE spectral response acceleration at each period shall be taken as 150 % of the largest median 5 % damped spectral response acceleration computed at that period for characteristic earthquakes individually acting on all known active faults within the region.

However, the ordinates of the deterministic site-specific MCE ground motion response spectrum shall not be taken lower than the corresponding ordinates of the response spectrum where the value of S_S is equal to $1.5F_a$ and the value of S_1 is equal to $0.6F_v / T$.

- #### E.4.2.4 Site-Specific MCE Ground Motions

The 5 % damped site-specific MCE spectral response acceleration at any period, S_a^*, shall be defined as the lesser of the probabilistic MCE ground motion spectral response accelerations determined in E.4.2.2 and the deterministic MCE ground motion spectral response accelerations defined in E.4.2.3.

The response spectrum values for 0.5 % damping for the convective behavior shall be 1.5 times the 5 % spectral values unless otherwise specified by the Purchaser.

The values for sites classified as F may not be less than 80 % of the values for a Site Class E site.

E.4.3 Sites Not Defined by ASCE 7 Methods

In regions outside the USA, where the regulatory requirements for determining design ground motion differ from the ASCE 7 methods prescribed in this Annex, the following methods may be utilized.

1) A response spectrum complying with the regulatory requirements may be used providing it is based on, or adjusted to, a basis of 5 % and 0.5 % damping as required in this Annex. The values of the design spectral acceleration coefficients, A_i and A_c, which include the effects of site amplification, importance factor and response modification may be determined directly. A_i shall be based on the calculated impulsive period of the

--`,,`````,,,,,,,,,,,`,,,`,,,,,,,,,,,`,,,-`-`,,`,,`,`,,`---

tank (see E.4.5.1) using the 5 % damped spectra, or the period may be assumed to be 0.2 seconds. A_c shall be based on the calculated convective period (see E.4.5.2) using the 0.5 % spectra.

2) If no response spectra shape is prescribed and only the peak ground acceleration, S_P, is defined, then the following substitutions shall apply:

$$S_S = 2.5\ S_P \quad \text{(E.4.3-1)}$$

$$S_1 = 1.25\ S_P \quad \text{(E.4.3-2)}$$

E.4.4 Modifications for Site Soil Conditions

The maximum considered earthquake spectral response accelerations for peak ground acceleration, shall be modified by the appropriate site coefficients, F_a and F_v from Table E.1 and Table E.2.

- Where the soil properties are not known in sufficient detail to determine the site class, Site Class D shall be assumed unless the authority having jurisdiction determines that Site Class E or F should apply at the site.

Table E.1—Value of F_a as a Function of Site Class

Site Class	Mapped Maximum Considered Earthquake Spectral Response Accelerations at Short Periods				
	$S_s \le 0.25$	$S_s = 0.50$	$S_s = 0.75$	$S_s = 1.0$	$S_s \ge 1.25$
A	0.8	0.8	0.8	0.8	0.8
B	1.0	1.0	1.0	1.0	1.0
C	1.2	1.2	1.1	1.0	1.0
D	1.6	1.4	1.2	1.1	1.0
E	2.5	1.7	1.2	0.9	0.9
F	[a]	[a]	[a]	[a]	[a]

[a] Site-specific geotechnical investigation and dynamic site response analysis is required.

Table E.2—Value of F_v as a Function of Site Class

Site Class	Mapped Maximum Considered Earthquake Spectral Response Accelerations at 1 Sec Periods				
	$S_1 \le 0.1$	$S_1 = 0.2$	$S_1 = 0.3$	$S_1 = 0.4$	$S_1 \ge 0.5$
A	0.8	0.8	0.8	0.8	0.8
B	1.0	1.0	1.0	1.0	1.0
C	1.7	1.6	1.5	1.4	1.3
D	2.4	2.0	1.8	1.6	1.5
E	3.5	3.2	2.8	2.4	2.4
F	[a]	[a]	[a]	[a]	[a]

[a] Site-specific geotechnical investigation and dynamic site response analysis is required.

SITE CLASS DEFINITIONS

The Site Classes are defined as follows:

A Hard rock with measured shear wave velocity, $\bar{v}_s$ > 1500 m/s (5000 ft/sec)

B Rock with 760 m/s < $\bar{v}_s \leq$ 1500 m/s (2500 ft/sec < $\bar{v}_s \leq$ 5000 ft/sec)

C Very dense soil and soft rock with 360 m/s < $\bar{v}_s \leq$ 760 m/s (1200 ft/sec < $\bar{v}_s \leq$ 2500 ft/sec) or with either N > 50 or $\bar{s}_u$ > 100 kPa (2000 psf)

D Stiff soil with 180 m/s $\leq \bar{v}_s \leq$ 360 m/s (600 ft/sec $\leq \bar{v}_s \leq$ 1200 ft/sec) or with either $15 \leq N \leq 50$ or 50 kPa $\leq \bar{s}_u \leq$ 100 kPa (1000 psf $\leq \bar{s}_u \leq$ 2000 psf)

E A soil profile with $\bar{v}_s$ < 180 m/s (600 ft/sec) or with either N < 15, $\bar{s}_u$ < 50 kPa (1000 psf), or any profile with more than 3 m (10 ft) of soft clay defined as soil with PI > 20, $w \geq 40\%$, and $\bar{s}_u$ < 25 kPa (500 psf)

F Soils requiring site-specific evaluations:

1) Soils vulnerable to potential failure or collapse under seismic loading such as liquefiable soils, quick and highly sensitive clays, collapsible weakly cemented soils. However, since tanks typically have an impulsive period of 0.5 secs or less, site-specific evaluations are not required but recommended to determine spectral accelerations for liquefiable soils. The Site Class may be determined as noted below, assuming liquefaction does not occur, and the corresponding values of F_a and F_v determined from Table E.1 and Table E.2.

2) Peats and/or highly organic clays (H_S > 3 m [10 ft] of peat and/or highly organic clay, where H = thickness of soil).

3) Very high plasticity clays (H_S > 8 m [25 ft] with *PI* > 75).

4) Very thick, soft/medium stiff clays (H_S > 36 m [120 ft])

The parameters used to define the Site Class are based on the upper 30 m (100 ft) of the site profile. Profiles containing distinctly different soil layers shall be subdivided into those layers designated by a number that ranges from 1 to n at the bottom where there are a total of n distinct layers in the upper 30 m (100 ft). The symbol i then refers to any one of the layers between 1 and n.

where

v_{si} is the shear wave velocity in m/s (ft/sec);

d_i is the *thickness* of any layer (between 0 and 30 m [100 ft]).

$$\bar{v} = \frac{\sum_{i=1}^{n} d_i}{\sum_{i=1}^{n} \frac{d_i}{v_{si}}} \qquad \text{(E.4.4-1)}$$

where

$\sum_{i=1}^{n} d_i$ = 30 m (100 ft);

N_i is the Standard Penetration Resistance determined in accordance with ASTM D1586, as directly measured in the field without corrections, and shall not be taken greater than 100 blows/ft.

$$\overline{N} = \frac{\sum_{i=1}^{n} d_i}{\sum_{i=1}^{n} \frac{d_i}{N_i}} \quad \text{(E.4.4-2)}$$

$$\overline{N}_{ch} = \frac{d_s}{\sum_{i=1}^{m} \frac{d_i}{N_i}} \quad \text{(E.4.4-3)}$$

where $\sum_{i=1}^{m} d_i = d_s$

Use only d_i and N_i for cohesionless soils.

d_s is the total thickness of cohesionless soil layers in the top 30 m (100 ft);

s_{ui} is the undrained shear strength in kPa (psf), determined in accordance with ASTM D2166 or D2850, and shall not be taken greater than 240 kPa (5,000 psf).

$$\bar{s}_u = \frac{d_c}{\sum_{i=1}^{k} \frac{d_i}{s_{ui}}} \quad \text{(E.4.4-4)}$$

where $\sum_{i=1}^{k} d_i = d_c$

d_c is the total thickness (100 – d_s) of cohesive soil layers in the top 30 m (100 ft);

PI is the plasticity index, determined in accordance with ASTM D4318;

W is the moisture content in %, determined in accordance with ASTM D2216.

STEPS FOR CLASSIFYING A SITE:

Step 1: Check for the four categories of Site Class F requiring site-specific evaluation. If the site corresponds to any of these categories, classify the site as Site Class F and conduct a site-specific evaluation.

Step 2: Check for the existence of a total thickness of soft clay > 3 m (10 ft) where a soft clay layer is defined by: $\bar{s}_u$ < 25 kPa (500 psf) $w \geq 40$ %, and PI > 20. If these criteria are satisfied, classify the site as Site Class E.

Step 3: Categorize the site using one of the following three methods with $\bar{v}_s$, N, and $\bar{s}_u$ computed in all cases see Table E.3:

a) $\bar{v}_s$ for the top 30 m (100 ft) ($\bar{v}_s$ method)**.**

b) N for the top 30 m (100 ft) (N method).

c) N for cohesionless soil layers (PI < 20) in the top 30 m (100 ft) and average $\bar{s}_u$ for cohesive soil layers (PI > 20) in the top 30 m (100 ft) ($\bar{s}_u$ method).

Table E.3—Site Classification

Site Class	$\bar{v}_s$	N or N_{ch}	s_u
E	(< 180 m/s) (< 600 fps)	< 15	< 50 kPa (< 1000 psf)
D	180 m/s to 360 m/s (600 to 1200 fps)	15 to 50	50 kPa to 100 kPa (1000 psf to 2000 psf)
C	360 m/s to 760 m/s (1200 fps to 2500 fps)	> 50	100 kPa (> 2000 psf)
B	760 m/s to 1500 m/s (2500 fps to 5000 fps)		
A	> 1500 m/s (5000 fps)		

[a] If the $\bar{s}_u$ method is used and the N_{ch} and s_u criteria differ, select the category with the softer soils (for example, use Site Class E instead of D).

Assignment of Site Class B shall be based on the shear wave velocity for rock. For competent rock with moderate fracturing and weathering, estimation of this shear wave velocity shall be permitted. For more highly fractured and weathered rock, the shear wave velocity shall be directly measured or the site shall be assigned to Site Class C.

Assignment of Site Class A shall be supported by either shear wave velocity measurements on site or shear wave velocity measurements on profiles of the same rock type in the same formation with an equal or greater degree of weathering and fracturing. Where hard rock conditions are known to be continuous to a depth of 30 m (100 ft), surficial shear wave velocity measurements may be extrapolated to assess $\bar{v}_s$.

Site Classes A and B shall not be used where there is more than 3 m (10 ft) of soil between the rock surface and the bottom of the tank foundation.

E.4.5 Structural Period of Vibration

The pseudo-dynamic modal analysis method utilized in this Annex is based on the natural period of the structure and contents as defined in this section.

E.4.5.1 Impulsive Natural Period

The design methods in this Annex are independent of impulsive period of the tank. However, the impulsive period of the tank system may be estimated by Equation E.4.5.11. See Figure E.1.

In SI units:

$$T_i = \left(\frac{1}{\sqrt{2000}}\right)\left(\frac{C_i H}{\sqrt{\frac{t_u}{D}}}\right)\left(\frac{\sqrt{\rho}}{\sqrt{E}}\right) \qquad \text{(E.4.5.1-1a)}$$

Substituting the SI units specified above: T_i = 0.128 sec.

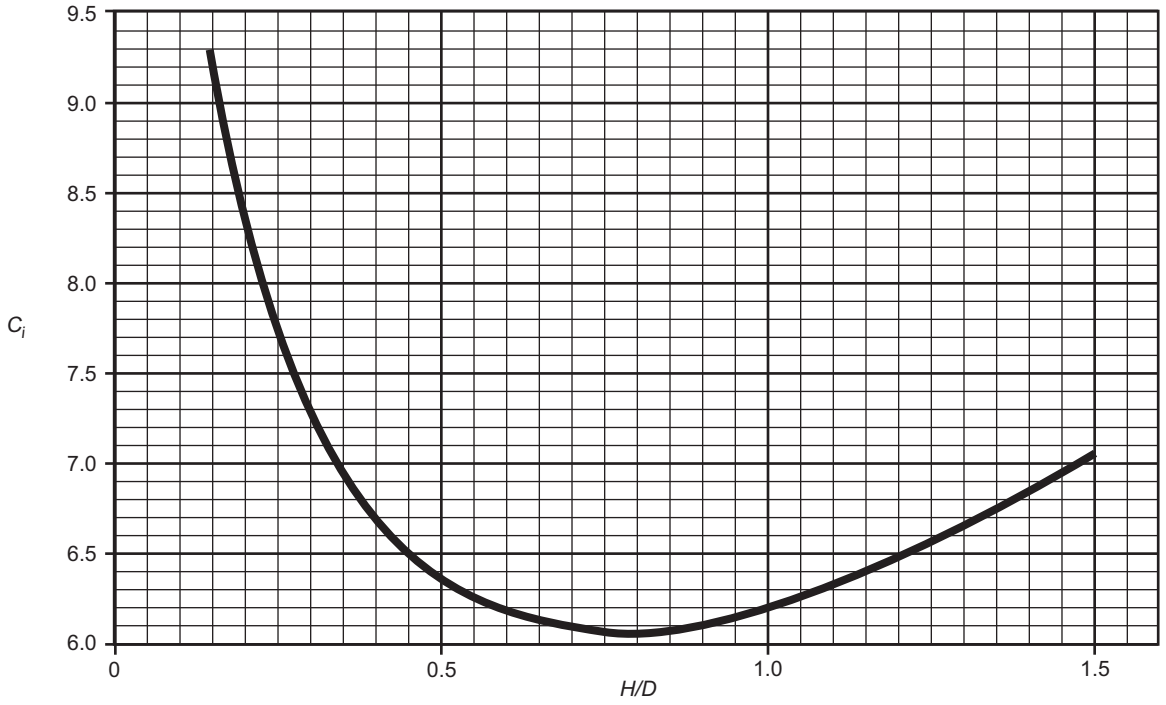

Figure E.1—Coefficient C_i

In USC units:

$$T_i = \left(\frac{1}{27.8}\right)\left(\frac{C_i H}{\sqrt{\frac{t_u}{D}}}\right)\left(\frac{\sqrt{\rho}}{\sqrt{E}}\right) \qquad \text{(E.4.5.1-1b)}$$

Substituting the USC units specified above: T_i = 0.128 sec.

E.4.5.2 Convective (Sloshing) Period

The first mode sloshing wave period, in seconds, shall be calculated by Equation E.4.5.2 where K_s is the sloshing period coefficient defined in Equation E.4.5.2-c:

In SI units:

$$T_c = 1.8 K_s \sqrt{D} \qquad \text{(E.4.5.2-a)}$$

or, in USC units:

$$T_c = K_s \sqrt{D} \qquad \text{(E.4.5.2-b)}$$

$$K_s = \frac{0.578}{\sqrt{\tanh\left(\frac{3.68H}{D}\right)}} \qquad \text{(E.4.5.2-c)}$$

E.4.6 Design Spectral Response Accelerations

The design response spectrum for ground supported, flat-bottom tanks is defined by the following parameters.

• E.4.6.1 Spectral Acceleration Coefficients

When probabilistic or mapped design methods are utilized, the spectral acceleration parameters for the design response spectrum are given in Equations E.4.6.1-1 through E.4.6.1-5. Unless otherwise specified by the Purchaser, T_L shall be taken as the mapped value found in ASCE 7. For tanks falling in SUG I or SUG II, the mapped value of T_L shall be used to determine convective forces except that a value of T_L equal to 4 seconds shall be permitted to be used to determine the sloshing wave height. For tanks falling in SUG III, the mapped value of T_L shall be used to determine both convective forces and sloshing wave height except that the importance factor, I, shall be set equal to 1.0 in the determination of sloshing wave height. In regions outside the USA, where the regulatory requirements for determining design ground motion differ from the ASCE 7 methods prescribed in this Annex, T_L shall be taken as 4 seconds.

For sites where only the peak ground acceleration is defined, substitute S_P for S_0 in Equations E.4.6.1-1 through E.4.6.2-1. The scaling factor, Q, is defined as 2/3 for the ASCE 7 methods. Q may be taken equal to 1.0 unless otherwise defined in the regulatory requirements where ASCE 7 does not apply. Soil amplification coefficients, F_a and F_v; the value of the importance factor, I; and the ASD response modification factors, R_{wi} and R_{wc}, shall be as defined by the local regulatory requirements. If these values are not defined by the regulations, the values in this Annex shall be used.

Impulsive spectral acceleration parameter, A_i:

$$A_i = S_{DS}\left(\frac{I}{R_{wi}}\right) = 2.5QF_aS_0\left(\frac{I}{R_{wi}}\right) \quad \text{(E.4.6.1-1)}$$

However, $A_i \geq 0.007$ (E.4.6.1-2)

and, for $S_1 \geq 0.6$:

$$A_i \geq 0.5S_1\left(\frac{I}{R_{wi}}\right) = 0.625S_P\left(\frac{I}{R_{wi}}\right) \quad \text{(E.4.6.1-3)}$$

Convective spectral acceleration parameter, A_c:

When, $T_C \leq T_L$ $$A_c = KS_{D1}\left(\frac{1}{T_c}\right)\left(\frac{I}{R_{wc}}\right) = 2.5KQF_aS_0\left(\frac{T_s}{T_c}\right)\left(\frac{I}{R_{wc}}\right) \leq A_i \quad \text{(E.4.6.1-4)}$$

When, $T_C > T_L$ $$A_c = KS_{D1}\left(\frac{T_L}{T_c^2}\right)\left(\frac{I}{R_{wc}}\right) = 2.5KQF_aS_0\left(\frac{T_sT_L}{T_c^2}\right)\left(\frac{I}{R_{wc}}\right) \leq A_i \quad \text{(E.4.6.1-5)}$$

E.4.6.2 Site-Specific Response Spectra

When site-specific design methods are specified, the seismic parameters shall be defined by Equations E.4.6.2-1 through E.4.6.2-3.

Impulsive spectral acceleration parameter:

$$A_i = 2.5\ Q\left(\frac{I}{R_{wi}}\right)S_{a0}^* \quad \text{(E.4.6.2-1)}$$

Alternatively, A_i, may be determined using either (1) the impulsive period of the tank system, or (2) assuming the impulsive period = 0.2 sec;

$$A_i = Q\left(\frac{I}{R_{wi}}\right)S_a* \quad \text{(E.4.6.2-2)}$$

where, S_a^* is the ordinate of the 5 % damped, site-specific MCE response spectra at the calculated impulsive period including site soil effects. See E.4.5.1.

Exception:

- Unless otherwise specified by the Purchaser, the value of the impulsive spectral acceleration, S_a*, for flat-bottom tanks with $H/D \leq 0.8$ need not exceed 150 %g when the tanks are:

  — self-anchored, or

  — mechanically-anchored tanks that are equipped with traditional anchor bolt and chairs at least 450 mm (18 in.) high and are not otherwise prevented from sliding laterally at least 25 mm (1 in.).

Convective spectral acceleration:

$$A_c = QK\left(\frac{I}{R_{wc}}\right)S_a* < A_i \quad \text{(E.4.6.2-3)}$$

where, S_a^* is the ordinate of the 5 % damped, site-specific MCE response spectra at the calculated convective period including site soil effects (see E.4.5.2).

Alternatively, the ordinate of a site-specific spectrum based on the procedures of E.4.2 for 0.5 % damping may be used to determine the value S_a^* with K set equal to 1.0.

E.5 Seismic Design Factors

E.5.1 Design Forces

The equivalent lateral seismic design force shall be determined by the general relationship:

$$F = AW_{\text{eff}} \quad \text{(E.5.1-1)}$$

where

A is the lateral acceleration coefficient, %g;

W_{eff} is the effective weight.

E.5.1.1 Response Modification Factor

The response modification factor for ground supported, liquid storage tanks designed and detailed to these provisions shall be less than or equal to the values shown in Table E.4.

Table E.4—Response Modification Factors for ASD Methods

Anchorage system	R_{wi}, (impulsive)	R_{wc}, (convective)
Self-anchored	3.5	2
Mechanically-anchored	4	2

E.5.1.2 Importance Factor

- The importance factor (I) is defined by the SUG and shall be specified by the Purchaser. See E.3 and Table E.5.

Table E.5—Importance Factor (I) and Seismic Use Group Classification

Seismic Use Group	I
I	1.0
II	1.25
III	1.5

E.6 Design

E.6.1 Design Loads

Ground-supported, flat-bottom tanks, storing liquids shall be designed to resist the seismic forces calculated by considering the effective mass and dynamic liquid pressures in determining the equivalent lateral forces and lateral force distribution. This is the default method for this Annex. The equivalent lateral force base shear shall be determined as defined in the following sections.

The seismic base shear shall be defined as the square root of the sum of the squares (SRSS) combination of the impulsive and convective components unless the applicable regulations require direct sum. For the purposes of this Annex, an alternate method using the direct sum of the effects in one direction combined with 40 % of the effect in the orthogonal direction is deemed to be equivalent to the SRSS summation.

$$V = \sqrt{V_i^2 + V_c^2} \tag{E.6.1-1}$$

where

$$V_i = A_i(W_s + W_r + W_f + W_i) \tag{E.6.1-2}$$

$$V_c = A_c W_c \tag{E.6.1-3}$$

E.6.1.1 Effective Weight of Product

The effective weights W_i and W_c shall be determined by multiplying the total product weight, W_p, by the ratios W_i/W_p and W_c/W_p, respectively, Equations E.6.1.1-1 through E.6.1.1-3.

When D/H is greater than or equal to 1.333, the effective impulsive weight is defined in Equation E.6.1.1-1:

$$W_i = \frac{\tanh\left(0.866\frac{D}{H}\right)}{0.866\frac{D}{H}} W_p \tag{E.6.1.1-1}$$

When D/H is less than 1.333, the effective impulsive weight is defined in Equation E.6.1.1-2:

$$W_i = \left[1.0 - 0.218\frac{D}{H}\right] W_p \tag{E.6.1.1-2}$$

The effective convective weight is defined in Equation E.6.1.1-3:

$$W_c = 0.230\frac{D}{H}\tanh\left(\frac{3.67H}{D}\right)W_p \qquad \text{(E.6.1.1-3)}$$

E.6.1.2 Center of Action for Effective Lateral Forces

The moment arm from the base of the tank to the center of action for the equivalent lateral forces from the liquid is defined by Equations E.6.1.2.1-1 through E.6.1.2.2-3.

The center of action for the impulsive lateral forces for the tank shell, roof and appurtenances is assumed to act through the center of gravity of the component.

E.6.1.2.1 Center of Action for Ringwall Overturning Moment

The ringwall moment, M_{rw}, is the portion of the total overturning moment that acts at the base of the tank shell perimeter. This moment is used to determine loads on a ringwall foundation, the tank anchorage forces, and to check the longitudinal shell compression.

The heights from the bottom of the tank shell to the center of action of the lateral seismic forces applied to W_i and W_c, X_i and X_c, may be determined by multiplying H by the ratios X_i/H and X_c/H, respectively, obtained for the ratio D/H by using Equations E.6.1.2.1-1 through E.6.1.2.2-3.

When D/H is greater than or equal to 1.3333, the height X_i is determined by Equation E.6.1.2.1-1:

$$X_i = 0.375H \qquad \text{(E.6.1.2.1-1)}$$

When D/H is less than 1.3333, the height X_i is determined by Equation E.6.1.2.1-2:

$$X_i = \left[0.5 - 0.094\frac{D}{H}\right]H \qquad \text{(E.6.1.2.1-2)}$$

The height X_c is determined by Equation E.6.1.2.1-3:

$$X_c = \left[1.0 - \frac{\cosh\left(\frac{3.67H}{D}\right) - 1}{\frac{3.67H}{D}\sinh\left(\frac{3.67H}{D}\right)}\right]H \qquad \text{(E.6.1.2.1-3)}$$

E.6.1.2.2 Center of Action for Slab Overturning Moment

The “slab” moment, M_s, is the total overturning moment acting across the entire tank base cross-section. This overturning moment is used to design slab and pile cap foundations.

When D/H is greater than or equal to 1.333, the height X_{is} is determined by Equation E.6.1.2.2-1:

$$X_{is} = 0.375\left[1.0 + 1.333\left(\frac{0.866\frac{D}{H}}{\tanh\left(0.866\frac{D}{H}\right)} - 1.0\right)\right]H \qquad \text{(E.6.1.2.2-1)}$$

When D/H is less than 1.333, the height X_{is} is determined by Equation E.6.1.2.2-2:

$$X_{is} = \left[0.500 + 0.060\frac{D}{H}\right]H \quad \text{(E.6.1.2.2-2)}$$

The height, X_{cs}, is determined by Equation E.6.1.2.2-3:

$$X_{cs} = \left[1.0 - \frac{\cosh\left(\frac{3.67H}{D}\right) - 1.937}{\frac{3.67H}{D}\sinh\left(\frac{3.67H}{D}\right)}\right]H \quad \text{(E.6.1.2.2-3)}$$

E.6.1.3 Vertical Seismic Effects

- When specified (see Line 8 in the Data Sheet), vertical acceleration effects shall be considered as acting in both upward and downward directions and combined with lateral acceleration effects by the SRSS method unless a direct sum combination is required by the applicable regulations. Vertical acceleration effects for hydrodynamic hoop stresses shall be combined as shown in E.6.1.4. Vertical acceleration effects need not be combined concurrently for determining loads, forces, and resistance to overturning in the tank shell except as applied in the equations of this Annex.

- The vertical seismic acceleration parameter shall be taken as $0.47S_{DS}$, unless otherwise specified by the Purchaser. Alternatively, the Purchaser may specify the vertical ground motion acceleration. That acceleration shall be multiplied by 0.7 to obtain the vertical acceleration parameter, A_v. The total vertical seismic force shall be:

$$F_v = \pm A_v W_{\text{eff}} \quad \text{(E.6.1.3-1)}$$

Vertical seismic effects shall be considered in the following when specified:

— shell hoop tensile stresses (see E.6.1.4);

— shell-membrane compression (see E.6.2.2);

— anchorage design (see E.6.2.1);

— fixed roof components (see E.7.5);

— sliding (see E.7.6);

— foundation design (see E.6.2.3).

- In regions outside the USA where the regulatory requirements differ from the methods prescribed in this Annex, the vertical acceleration parameter and combination with lateral effects may be applied as defined by the governing regulatory requirements.

E.6.1.4 Dynamic Liquid Hoop Forces

Dynamic hoop tensile stresses due to the seismic motion of the liquid shall be determined by the following formulas:

For $D/H \geq 1.333$:

In SI units:

$$N_i = 8.48A_iGDH\left[\frac{Y}{H} - 0.5\left(\frac{Y}{H}\right)^2\right]\tanh\left(0.866\frac{D}{H}\right) \quad \text{(E.6.1.4-1a)}$$

or, in USC units:

$$N_i = 4.5A_iGDH\left[\frac{Y}{H} - 0.5\left(\frac{Y}{H}\right)^2\right]\tanh\left(0.866\frac{D}{H}\right) \quad \text{(E.6.1.4-1b)}$$

For $D/H < 1.33$ and $Y < 0.75D$:

In SI units:

$$N_i = 5.22A_iGD^2\left[\frac{Y}{0.75D} - 0.5\left(\frac{Y}{0.75D}\right)^2\right] \quad \text{(E.6.1.4-2a)}$$

or, in USC units:

$$N_i = 2.77A_iGD^2\left[\frac{Y}{0.75D} - 0.5\left(\frac{Y}{0.75D}\right)^2\right] \quad \text{(E.6.1.4-2b)}$$

For $D/H < 1.333$ and $Y \geq 0.75D$:

In SI units:

$$N_i = 2.6A_iGD^2 \quad \text{(E.6.1.4-3a)}$$

or, in USC units:

$$N_i = 1.39A_iGD^2 \quad \text{(E.6.1.4-3b)}$$

For all proportions of D/H:

In SI units:

$$N_c = \frac{1.85A_cGD^2\cosh\left[\frac{3.68(H-Y)}{D}\right]}{\cosh\left[\frac{3.68H}{D}\right]} \quad \text{(E.6.1.4-4a)}$$

or, in USC units:

$$N_c = \frac{0.98A_cGD^2\cosh\left[\frac{3.68(H-Y)}{D}\right]}{\cosh\left[\frac{3.68H}{D}\right]} \quad \text{(E.6.1.4-4b)}$$

When the Purchaser specifies that vertical acceleration need not be considered (i.e. $A_v = 0$), the combined hoop stress shall be defined by Equation E.6.1.4-5. The dynamic hoop tensile stress shall be directly combined with the product hydrostatic design stress in determining the total stress.

$$\sigma_T = \sigma_h \pm \sigma_s = \frac{N_h \pm \sqrt{N_i^2 + N_c^2}}{t} \quad \text{(E.6.1.4-5)}$$

When vertical acceleration is specified.

$$\sigma_T = \sigma_h \pm \sigma_s = \frac{N_h \pm \sqrt{N_i^2 + N_c^2 + (A_v N_h / 2.5)^2}}{t} \quad \text{(E.6.1.4-6)}$$

E.6.1.5 Overturning Moment

- The seismic overturning moment at the base of the tank shell shall be the SRSS summation of the impulsive and convective components multiplied by the respective moment arms to the center of action of the forces unless otherwise specified.

Ringwall Moment, M_{rw}:

$$M_{rw} = \sqrt{[A_i(W_i X_i + W_s X_s + W_r X_r)]^2 + [A_c(W_c X_c)]^2} \quad \text{(E.6.1.5-1)}$$

Slab Moment, M_S:

$$M_s = \sqrt{[A_i(W_i X_{is} + W_s X_s + W_r X_r)]^2 + [A_c(W_c X_{cs})]^2} \quad \text{(E.6.1.5-2)}$$

Unless a more rigorous determination is used, the overturning moment at the bottom of each shell ring shall be defined by linear approximation using the following.

1) If the tank is equipped with a fixed roof, the impulsive shear and overturning moment is applied at the top of the shell.

2) The impulsive shear and overturning moment for each shell course is included based on the weight and centroid of each course.

3) The overturning moment due to the liquid is approximated by a linear variation that is equal to the ringwall moment, M_{rw} at the base of the shell to zero at the maximum liquid level.

E.6.1.6 Soil-Structure Interaction

- If specified by the Purchaser, the effects of soil-structure interaction on the effective damping and period of vibration may be considered for tanks in accordance with ASCE 7 with the following limitations,

— Tanks shall be equipped with a reinforced concrete ringwall, mat or similar type foundation supported on grade. Soil-structure interaction effects for tanks supported on granular berm or pile type foundation are outside the scope of this Annex.

— The tanks shall be mechanically anchored to the foundation.

— The effective damping factor for the structure-foundation system shall not exceed 20 %.

E.6.2 Resistance to Design Loads

The allowable stress design (ASD) method is utilized in this Annex. Allowable stresses in structural elements applicable to normal operating conditions may be increased by 33 % when the effects of the design earthquake are included unless otherwise specified in this Annex.

E.6.2.1 Anchorage

Resistance to the design overturning (ringwall) moment at the base of the shell may be provided by:

— the weight of the tank shell, weight of roof reaction on shell W_{rs}, and by the weight of a portion of the tank contents adjacent to the shell for unanchored tanks;

— Mechanical anchorage devices.

E.6.2.1.1 Self-Anchored

For self-anchored tanks, a portion of the contents may be used to resist overturning. The anchorage provided is dependent on the assumed width of a bottom annulus uplifted by the overturning moment. The resisting annulus may be a portion of the tank bottom or a separate butt-welded annular ring. The overturning resisting force of the annulus that lifts off the foundation shall be determined by Equation E.6.2.1.1-1 except as noted below:

In SI units:

$$w_a = 99 t_a \sqrt{F_y H G_e} \le 201.1\ HDG_e \qquad \text{(E.6.2.1.1-1a)}$$

or, in USC units:

$$w_a = 7.9 t_a \sqrt{F_y H G_e} \le 1.28\ HDG_e \qquad \text{(E.6.2.1.1-1b)}$$

Equation E.6.2.1.1-1 for w_a applies whether or not a thickened bottom annulus is used. If w_a exceeds the limit of 201.1 HDG_e, (1.28 HDG_e) the value of L shall be set to 0.035D and the value of w_a shall be set equal to 201.1 HDG_e, (1.28 HDG_e). A value of L defined as L_s that is less than that determined by the equation found in E.6.2.1.1.2-1 may be used. If a reduced value L_s is used, a reduced value of w_a shall be used as determined below:

In SI units:

$$w_a = 5742\ HG_e L_s \qquad \text{(E.6.2.1.1-2a)}$$

In USC units

$$w_a = 36.5\ HG_e L_s \qquad \text{(E.6.2.1.1-2b)}$$

The tank is self-anchored providing the following conditions are met:

1) The resisting force is adequate for tank stability (i.e. the anchorage ratio, $J \le 1.54$).

2) The maximum width of annulus for determining the resisting force is 3.5 % of the tank diameter.

3) The shell compression satisfies E.6.2.2.

4) The required annulus plate thickness does not exceed the thickness of the bottom shell course.

5) Piping flexibility requirements are satisfied.

E.6.2.1.1.1 Anchorage Ratio, *J* (see Table E.6)

$$J = \frac{M_{rw}}{D^2[w_t(1-0.4A_v)+w_a-0.4w_{int}]} \quad \text{(E.6.2.1.1.1-1)}$$

where

$$w_t = \left[\frac{W_s}{\pi D}+w_{rs}\right] \quad \text{(E.6.2.1.1.1-2)}$$

Table E.6—Anchorage Ratio Criteria

Anchorage Ratio *J*	Criteria
$J \le 0.785$	No calculated uplift under the design seismic overturning moment. The tank is self-anchored.
$0.785 < J \le 1.54$	Tank is uplifting, but the tank is stable for the design load providing the shell compression requirements are satisfied. Tank is self-anchored.
$J > 1.54$	Tank is not stable and cannot be self-anchored for the design load. Modify the annular ring if $L < 0.035D$ is not controlling or add mechanical anchorage.

E.6.2.1.1.2 Annular Ring Requirements

The thickness of the tank bottom plate provided under the shell may be greater than or equal to the thickness of the general tank bottom plate with the following restrictions.

NOTE In thickening the bottom annulus, the intent is not to force a thickening of the lowest shell course, thereby inducing an abrupt thickness change in the shell, but rather to impose a limit on the bottom annulus thickness based on the shell design.

1) The thickness, t_a, corresponding with the final w_a in Equation E.6.2.1.1.1-1 and Equation E.6.2.1.1.1-2 shall not exceed the first shell course thickness, t_s, less the shell corrosion allowance.

2) Nor shall the thickness, t_a, used in Equation E.6.2.1.1.1-1 and Equation E.6.2.1.1.1-2 exceed the actual thickness of the plate under the shell less the corrosion allowance for tank bottom.

3) When the bottom plate under the shell is thicker than the remainder of the tank bottom, the minimum projection, L, of the supplied thicker annular ring inside the tank wall shall be the greater of 0.45 m (1.5 ft) or as determined in equation (E.6.2.1.1.2-1); however, L need not be greater than 0.035 *D*:

In SI units:

$$L = 0.01723 t_a \sqrt{F_y/(HG_e)} \quad \text{(E.6.2.1.1.2-1a)}$$

or, in USC units:

$$L = 0.216 t_a \sqrt{F_y/(HG_e)} \quad \text{(E.6.2.1.1.2-1b)}$$

E.6.2.1.2 Mechanically-Anchored

- If the tank configuration is such that the self-anchored requirements can not be met, the tank must be anchored with mechanical devices such as anchor bolts or straps.

When tanks are anchored, the resisting weight of the product shall not be used to reduce the calculated uplift load on the anchors. The anchors shall be sized to provide for at least the following minimum anchorage resistance:

$$w_{AB} = \left(\frac{1.273M_{rw}}{D^2} - w_t(1 - 0.4A_v)\right) \quad \text{(E.6.2.1.2-1)}$$

plus the uplift, in N/m (lbf/ft) of shell circumference, due to design internal pressure. See 5.2.2 for load combinations. Wind loading need not be considered in combination with seismic loading.

The anchor seismic design load, P_{AB}, is defined in Equation E.6.2.1.2-2:

$$P_{AB} = w_{AB}\left(\frac{\pi D}{n_A}\right) \quad \text{(E.6.2.1.2-2)}$$

where, n_A is the number of equally-spaced anchors around the tank circumference. P_{AB} shall be increased to account for unequal spacing.

When mechanical anchorage is required, the anchor embedment or attachment to the foundation, the anchor attachment assembly and the attachment to the shell shall be designed for P_A. The anchor attachment design load, P_A, shall be the lesser of the load equal to the minimum specified yield strength multiplied by the nominal root area of the anchor or three times P_{AB}.

The maximum allowable stress for the anchorage parts shall not exceed the following values for anchors designed for the seismic loading alone or in combination with other load cases.

— An allowable tensile stress for anchor bolts and straps equal to 80 % of the published minimum yield stress.

— For other parts, 133 % of the allowable stress in accordance with 5.12.8.

— The maximum allowable design stress in the shell at the anchor attachment shall be limited to 170 MPa (25,000 lbf/in.^{2}) with no increase for seismic loading. These stresses can be used in conjunction with other loads for seismic loading when the combined loading governs.

E.6.2.2 Maximum Longitudinal Shell-Membrane Compression Stress

E.6.2.2.1 Shell Compression in Self-Anchored Tanks

The maximum longitudinal shell compression stress at the bottom of the shell when there is no calculated uplift, $J < 0.785$, shall be determined by the formula:

In SI units:

$$\sigma_c = \left(w_t(1 + 0.4A_v) + \frac{1.273M_{rw}}{D^2}\right)\frac{1}{1000t_s} \quad \text{(E.6.2.2.1-1a)}$$

or, in USC units:

$$\sigma_c = \left(w_t(1 + 0.4A_v) + \frac{1.273M_{rw}}{D^2}\right)\frac{1}{12t_s} \quad \text{(E.6.2.2.1-1b)}$$

The maximum longitudinal shell compression stress at the bottom of the shell when there is calculated uplift, $J > 0.785$, shall be determined by the formula:

In SI units:

$$\sigma_c = \left(\frac{w_t(1+0.4A_v)+w_a}{0.607-0.18667[J]^{2.3}} - w_a\right)\frac{1}{1000t_s} \quad \text{(E.6.2.2.1-2a)}$$

or, in USC units:

$$\sigma_c = \left(\frac{w_t(1+0.4A_v)+w_a}{0.607-0.18667[J]^{2.3}} - w_a\right)\frac{1}{12t_s} \quad \text{(E.6.2.2.1-2b)}$$

E.6.2.2.2 Shell Compression in Mechanically-Anchored Tanks

The maximum longitudinal shell compression stress at the bottom of the shell for mechanically-anchored tanks shall be determined by the formula:

In SI units:

$$\sigma_c = \left(w_t(1+0.4A_v)+\frac{1.273M_{rw}}{D^2}\right)\frac{1}{1000t_s} \quad \text{(E.6.2.2.2-1a)}$$

or, in USC units:

$$\sigma_c = \left(w_t(1+0.4A_v)+\frac{1.273M_{rw}}{D^2}\right)\frac{1}{12t_s} \quad \text{(E.6.2.2.2-1b)}$$

E.6.2.2.3 Allowable Longitudinal Shell-Membrane Compression Stress in Tank Shell

The maximum longitudinal shell compression stress s_c must be less than the seismic allowable stress F_C, which is determined by the following formulas and includes the 33% increase for ASD. These formulas for F_C, consider the effect of internal pressure due to the liquid contents.

When GHD^2/t^2 is ≥ 44 (SI units) (10^6 USC units),

In SI units:

$$F_C = 83\ t_s/D \quad \text{(E.6.2.2.3-1a)}$$

or, in USC units:

$$F_C = 10^6\ t_s/D \quad \text{(E.6.2.2.3-1b)}$$

In SI units:

When GHD^2/t^2 is < 44:

$$F_C = 83t_s/(2.5D) + 7.5\sqrt{(GH)} < 0.5F_{ty} \quad \text{(E.6.2.2.3-2a)}$$

or, in USC units:

When GHD^2/t^2 is less than 1×10^6:

$$F_C = 10^6\, t_s/(2.5D) + 600\sqrt{(GH)} < 0.5F_{ty} \qquad \text{(E.6.2.2.3-2b)}$$

If the thickness of the bottom shell course calculated to resist the seismic overturning moment is greater than the thickness required for hydrostatic pressure, both excluding any corrosion allowance, then the calculated thickness of each upper shell course for hydrostatic pressure shall be increased in the same proportion, unless a special analysis is made to determine the seismic overturning moment and corresponding stresses at the bottom of each upper shell course (see E.6.1.5).

E.6.2.3 Foundation

Foundations and footings for mechanically-anchored flat-bottom tanks shall be proportioned to resist peak anchor uplift and overturning bearing pressure. Product and soil load directly over the ringwall and footing may be used to resist the maximum anchor uplift on the foundation, provided the ringwall and footing are designed to carry this eccentric loading.

Product load shall not be used to reduce the anchor load.

When vertical seismic accelerations are applicable, the product load directly over the ringwall and footing.

1) When used to resist the maximum anchor uplift on the foundation, the product pressure shall be multiplied by a factor of $(1 - 0.4A_v)$ and the foundation ringwall and footing shall be designed to resist the eccentric loads with or without the vertical seismic accelerations.

2) When used to evaluate the bearing (downward) load, the product pressure over the ringwall shall be multiplied by a factor of $(1 + 0.4A_v)$ and the foundation ringwall and footing shall be designed to resist the eccentric loads with or without the vertical seismic accelerations.

The overturning stability ratio for mechanically-anchored tank system excluding vertical seismic effects shall be 2.0 or greater as defined in Equation E.6.2.3-1.

$$\frac{0.5D[W_p + W_f + W_T + W_{fd} + W_g]}{M_s} \geq 2.0 \qquad \text{(E.6.2.3-1)}$$

Ringwalls for self-anchored flat-bottom tanks shall be proportioned to resist overturning bearing pressure based on the maximum longitudinal shell compression force at the base of the shell in Equation E.6.2.3-2. Slabs and pile caps for self-anchored tanks shall be designed for the peak loads determined in E.6.2.2.1.

$$P_f = \left(w_t(1 + 0.4A_v) + \frac{1.273M_{rw}}{D^2}\right) \qquad \text{(E.6.2.3-2)}$$

E.6.2.4 Hoop Stresses

The maximum allowable hoop tension membrane stress for the combination of hydrostatic product and dynamic membrane hoop effects shall be the lesser of:

— the basic allowable membrane in this standard for the shell plate material increased by 33 %; or,

— $0.9F_y$ times the joint efficiency where F_y is the lesser of the published minimum yield strength of the shell material or weld material.

E.7 Detailing Requirements

E.7.1 Anchorage

Tanks at grade are permitted to be designed without anchorage when they meet the requirements for self-anchored tanks in this Annex.

The following special detailing requirements shall apply to steel tank mechanical anchors in seismic regions where $S_{DS} > 0.05g$.

E.7.1.1 Self-Anchored

For tanks in SUG III and located where $S_{DS} = 0.5g$ or greater, butt-welded annular plates shall be required. Annular plates exceeding 10 mm ($^3/_8$ in.) thickness shall be butt-welded. The weld of the shell to the bottom annular plate shall be checked for the design uplift load.

E.7.1.2 Mechanically-Anchored

When mechanical-anchorage is required, at least six anchors shall be provided. The spacing between anchors shall not exceed 3 m (10 ft).

When anchor bolts are used, they shall have a corroded shank diameter of no less than 25 mm (1 in.). Carbon steel anchor straps shall have a nominal thickness of not less than 6 mm ($^1/_4$ in.) and shall have a minimum corrosion allowance of 1.5 mm ($^1/_{16}$ in.) on each surface for a distance at least 75 mm (3 in.) but not more than 300 mm (12 in.) above the surface of the concrete.

Hooked anchor bolts (L- or J-shaped embedded bolts) or other anchorage systems based solely on bond or mechanical friction shall not be used when seismic design is required by this Annex. Post-installed anchors may be used provided that testing validates their ability to develop yield load in the anchor under cyclic loads in cracked concrete and meet the requirements of ACI 355.

E.7.2 Freeboard

- Sloshing of the liquid within the tank or vessel shall be considered in determining the freeboard required above the top capacity liquid level. A minimum freeboard shall be provided per Table E.7. See E.4.6.1. Purchaser shall specify whether freeboard is desired for SUG I tanks. Freeboard is required for SUG II and SUG III tanks. The height of the sloshing wave above the product design height can be estimated by:

$$\delta_s = 0.42\, DA_f \quad \text{(see Note c in Table E.7)} \tag{E.7.2-1}$$

For SUG I and II,

$$\text{When, } T_C \le 4 \qquad A_f = KS_{D1}I\left(\frac{1}{T_C}\right) = 2.5KQF_aS_0I\left(\frac{T_S}{T_C}\right) \tag{E.7.2-2}$$

$$\text{When, } T_C > 4 \qquad A_f = KS_{D1}I\left(\frac{4}{T_C^2}\right) = 2.5KQF_aS_0I\left(\frac{4T_S}{T_C^2}\right) \tag{E.7.2-3}$$

For SUG III,

$$\text{When, } T_C \le T_L \qquad A_f = KS_{D1}\left(\frac{1}{T_C}\right) = 2.5KQF_aS_0\left(\frac{T_S}{T_C}\right) \tag{E.7.2-4}$$

$$\text{When, } T_C > T_L \qquad A_f = KS_{D1}\left(\frac{T_L}{T_C^2}\right) = 2.5KQF_aS_0\left(\frac{T_ST_L}{T_C^2}\right) \tag{E.7.2-5}$$

Table E.7—Minimum Required Freeboard

Value of S_{DS}	SUG I	SUG II	SUG III
$S_{DS} < 0.33g$	(a)	(a)	δ_s (c)
$S_{DS} \geq 0.33g$	(a)	$0.7\delta_s$ (b)	δ_s (c)

a. A freeboard of $0.7\delta_s$ is recommended for economic considerations but not required.

b. A freeboard equal to $0.7\delta_s$ is required unless one of the following alternatives are provided.
   1. Secondary containment is provided to control the product spill.
   2. The roof and tank shell are designed to contain the sloshing liquid.

c. Freeboard equal to the calculated wave height, δ_s, is required unless one of the following alternatives are provided.
   1. Secondary containment is provided to control the product spill.
   2. The roof and tank shell are designed to contain the sloshing liquid.

E.7.3 Piping Flexibility

Piping systems connected to tanks shall consider the potential movement of the connection points during earthquakes and provide sufficient flexibility to avoid release of the product by failure of the piping system. The piping system and supports shall be designed so as to not impart significant mechanical loading on the attachment to the tank shell. Local loads at piping connections shall be considered in the design of the tank shell. Mechanical devices which add flexibility such as bellows, expansion joints, and other flexible apparatus may be used when they are designed for seismic loads and displacements.

Unless otherwise calculated, piping systems shall provide for the minimum displacements in Table E.8 at working stress levels (with the 33 % increase for seismic loads) in the piping, supports and tank connection. The piping system and tank connection shall also be designed to tolerate $1.4C_d$ times the working stress displacements given in Table E.8 without rupture, although permanent deformations and inelastic behavior in the piping supports and tank shell is permitted. For attachment points located above the support or foundation elevation, the displacements in Table E.8 shall be increased to account for drift of the tank or vessel.

Table E.8—Design Displacements for Piping Attachments

Condition	ASD Design Displacement mm (in.)
Mechanically-anchored tanks	
Upward vertical displacement relative to support or foundation:	25 (1)
Downward vertical displacement relative to support or foundation:	13 (0.5)
Range of horizontal displacement (radial and tangential) relative to support or foundation:	13 (0.5)
Self-anchored tanks	
Upward vertical displacement relative to support or foundation:	
Anchorage ratio less than or equal to 0.785:	25 (1)
Anchorage ratio greater than 0.785:	100 (4)
Downward vertical displacement relative to support or foundation:	
For tanks with a ringwall/mat foundation:	13 (0.5)
For tanks with a berm foundation:	25 (1)
Range of horizontal displacement (radial and tangential) relative to support or foundation:	50 (2)

The values given in Table E.8 do not include the influence of relative movements of the foundation and piping anchorage points due to foundation movements (such as settlement or seismic displacements). The effects of foundation movements shall be included in the design of the piping system design, including the determination of the mechanical loading on the tank or vessel consideration of the total displacement capacity of the mechanical devices intended to add flexibility.

When $S_{DS} < 0.1$, the values in Table E.7 may be reduced to 70 % of the values shown.

E.7.3.1 Method for Estimating Tank Uplift

The maximum uplift at the base of the tank shell for a self-anchored tank constructed to the criteria for annular plates (see E.6.2.1) may be approximated by Equation E.7.3.1-1:

In SI units:

$$y_u = \frac{12.10 F_y L^2}{t_b} \quad \text{(E.7.3.1-1a)}$$

Or, in USC units:

$$y_u = \frac{F_y L^2}{83{,}300 t_b} \quad \text{(E.7.3.1-1b)}$$

where

t_b is the calculated annular ring t hold-down

E.7.4 Connections

Connections and attachments for anchorage and other lateral force resisting components shall be designed to develop the strength of the anchor (e.g. minimum published yield strength, F_y in direct tension, plastic bending moment), or 4 times the calculated element design load.

Penetrations, manholes, and openings in shell components shall be designed to maintain the strength and stability of the shell to carry tensile and compressive membrane shell forces.

The bottom connection on an unanchored flat-bottom tank shall be located inside the shell a sufficient distance to minimize damage by uplift. As a minimum, the distance measured to the edge of the connection reinforcement shall be the width of the calculated unanchored bottom hold-down plus 300 mm (12 in.)

E.7.5 Internal Components

The attachments of internal equipment and accessories which are attached to the primary liquid- or pressure-retaining shell or bottom, or provide structural support for major components shall be designed for the lateral loads due to the sloshing liquid in addition to the inertial forces.

- Seismic design of roof framing and columns shall be made if specified by the Purchaser. The Purchaser shall specify live loads and amount of vertical acceleration to be used in seismic design of the roof members. Columns shall be designed for lateral liquid inertia loads and acceleration as specified by the Purchaser. Seismic beam-column design shall be based upon the primary member allowable stresses set forth in AISC (ASD), increased by one-third for seismic loading.

Internal columns shall be guided or supported to resist lateral loads (remain stable) even if the roof components are not specified to be designed for the seismic loads, including tanks that need not be designed for seismic ground motion in this Annex (see E.1).

E.7.6 Sliding Resistance

The transfer of the total lateral shear force between the tank and the subgrade shall be considered.

For self-anchored flat-bottom steel tanks, the overall horizontal seismic shear force shall be resisted by friction between the tank bottom and the foundation or subgrade. Self-anchored storage tanks shall be proportioned such that the calculated seismic base shear, V, does not exceed V_s:

The friction coefficient, μ, shall not exceed 0.4. Lower values of the friction coefficient should be used if the interface of the bottom to supporting foundation does not justify the friction value above (e.g., leak detection membrane beneath the bottom with a lower friction factor, smooth bottoms, etc.).

$$V_s = \mu(W_s + W_r + W_f + W_p)(1.0 - 0.4A_v) \quad \text{(E.7.6-1)}$$

No additional lateral anchorage is required for mechanically-anchored steel tanks designed in accordance with this Annex even though small movements of approximately 25 mm (1 in.) are possible.

The lateral shear transfer behavior for special tank configurations (e.g., shovel bottoms, highly crowned tank bottoms, tanks on grillage) can be unique and are beyond the scope of this Annex.

E.7.7 Local Shear Transfer

Local transfer of the shear from the roof to the shell and the shell of the tank into the base shall be considered. For cylindrical tanks, the peak local tangential shear per unit length shall be calculated by:

$$V_{\max} = \frac{2V}{\pi D} \quad \text{(E.7.7-1)}$$

Tangential shear in flat-bottom steel tanks shall be transferred through the welded connection to the steel bottom. The shear stress in the weld shall not exceed 80 % of the weld or base metal yield stress. This transfer mechanism is deemed acceptable for steel tanks designed in accordance with the provisions and $S_{DS} < 1.0g$.

E.7.8 Connections with Adjacent Structures

Equipment, piping, and walkways or other appurtenances attached to the tank or adjacent structures shall be designed to accommodate the elastic displacements of the tank imposed by design seismic forces amplified by a factor of 3.0 plus the amplified displacement of the other structure.

E.7.9 Shell Support

Self-anchored tanks resting on concrete ringwalls or slabs shall have a uniformly supported annulus under the shell. The foundation must be supplied to the tolerances required in 7.5.5 in to provide the required uniform support for Items b, c, and d below. Uniform support shall be provided by one of the following methods:

a) shimming and grouting the annulus;

b) using fiberboard or other suitable padding;

c) using double butt-welded bottom or annular plates resting directly on the foundation, Annular plates or bottom plates under the shell may utilize back-up bars welds if the foundation is notched to prevent the back-up bar from bearing on the foundation;

d) using closely spaced shims (without structural grout) provided that the localized bearing loads are considered in the tank wall and foundation to prevent local crippling and spalling.

Mechanically-anchored tanks shall be shimmed and grouted.

Annex EC
(informative)

Commentary on Annex E

Acknowledgement

The development of this extensive revision to Annex E and preparation of this Commentary was funded jointly by API and the Federal Emergency Management Agency through the American Lifelines Alliance. The development of this Annex and Commentary was directed by the API Seismic Task Group with technical review by the Dynamic Analysis and Testing Committee of the Pressure Vessel Research Council.

EC.1 Scope

API 650, Annex E has been revised in it's entirety to accomplish the following:

— incorporate the newer definitions of ground motion used in the U.S. model building codes and ASCE 7;

— add a procedure to address regions outside the US where ground motions may be defined differently by local regulations;

— expand and generalize the equations to improve programming applications and reduce reliance on plots and equations where terms were combined and lacked the clarity needed to adapt to changing requirements;

— include additional requirements for hydrodynamic hoop stresses and vertical earthquake;

— include, for the convenience of the users, information and equations previously found in outside reference materials;

— revise the combination of impulsive and convective forces to use the SRSS method instead of direct sum method;

— introduce the concept of an "anchorage ratio" for clarity;

— add a foundation stability ratio requirement;

— permit the use of soil structure interaction for mechanically-anchored tanks;

— add detailing requirements for freeboard, pipe flexibility, and other components; and

— improve maintainability.

EC.2 Definitions and Notations

For additional definitions and background information, the user is referred to the following documents:

— *National Earthquake Hazard Reduction Program Provisions and Commentary*, FEMA Publications 302, 303, 368, and 369.

— ASCE 7, *Minimum Design Loads for Buildings and Other Structures*, American Society of Civil Engineers.

— *International Building Code*, 2000 and 2003.

EC.3 Performance Basis

EC.3.1 Seismic Use Group

Tanks are classified in the appropriate Seismic Use Group based on the function and hazard to the public. Tank owner/operators may elect to specify a higher SUG as part of their risk management approach for a tank or facility. Specifying a higher SUG increases the Importance Factor, I, used to define the design acceleration parameters and indirectly influences the performance level expected of the tank. Selection of the appropriate SUG is by the owner or specifying engineer who is familiar with the risk management goals, the surrounding environment, the spill prevention, control and countermeasures plans and other factors.

SUG I is the default classification.

EC.3.1.1 Seismic Use Group III

Tanks assigned the SUG III designation are those whose function are deemed essential (i.e. critical) in nature for public safety, or those tanks that store materials that may pose a very serious risk to the public if released and lack secondary control or protection. For example, tanks serving these types of applications may be assigned SUG III unless an alternative or redundant source is available:

1) fire, rescue, and police stations;

2) hospitals and emergency treatment facilities;

3) power generating stations or other utilities required as emergency backup facilities for Seismic Use Group III facilities;

4) designated essential communication centers;

5) structures containing sufficient quantities of toxic or explosive substances deemed to be hazardous to the public but lack secondary safeguards to prevent widespread public exposure;

6) water production, distribution, or treatment facilities required to maintain water pressure for fire suppression within the municipal or public domain (not industrial).

It is unlikely that petroleum storage tanks in terminals, pipeline storage facilities and other industrial sites would be classified as SUG III unless there are extenuating circumstances.

EC.3.1.2 Seismic Use Group II

Tanks assigned the SUG II designation are those that should continue to function, after a seismic event, for public welfare, or those tanks that store materials that may pose a moderate risk to the public if released and lack secondary containment or other protection. For example, tanks serving the following types of applications may be assigned SUG II unless an alternative or redundant source is available:

1) power generating stations and other public utility facilities not included in Seismic Use Group III and required for continued operation;

2) water and wastewater treatment facilities required for primary treatment and disinfection for potable water.

EC.3.1.3 Seismic Use Group I

SUG I is the most common classification. For example, tanks serving the following types of applications may be assigned SUG I unless an alternative or redundant source is available:

1) storage tanks in a terminal or industrial area isolated from public access that has secondary spill prevention and control;

2) storage tanks without secondary spill prevention and control systems that are sufficiently removed from areas of public access such that the hazard is minimal.

EC.4 Site Ground Motion

The definition of the considered ground motion at the site is the first step in defining acceleration parameters and loads. The philosophy for defining the considered ground motion in the U.S. began changing about 1997. This new approach, which began with the evolution of the 1997 UBC and advanced through the efforts of the National Earthquake Hazard Reduction Program, was the basic resource for the new model building codes. Subsequent to the *International Building Code* 2000, ASCE 7 adopted the methods and is presently the basis for the US model building codes.

However, regulations governing seismic design for tank sites outside the U.S. may not follow this ASCE 7 approach. Therefore, this revision was written to be adaptable to these regulations. Consequently, there is no longer a definition of the “minimum” design ground motion based on US standards that applies to all sites regardless of the local regulations.

Historically, this Annex (and the U.S. standards) was based on ground motion associated with an event having a 10 % probability of exceedance in 50 years. This is an event that has a recurrence interval of 475 years. In seismically active areas where earthquakes are more frequent, such as the west coast of the US, this was a reasonable approach. In regions where earthquakes are less frequent, engineers and seismologists concluded that the hazard was under-predicted by the 475 year event. Thus, the maximum considered ground motion definition was revised to a 2 % probability of exceedance in 50 years, or a recurrence interval of about 2500 years. The economic consequences of designing to this more severe ground motion was impractical so a scaling factor was introduced based on over-strength inherently present in structures built to today’s standards. See the NEHRP Provisions for a more extensive discussion of this rationale.

The API Seismic Task Group considered setting the 475 year event as the “minimum” for application of this standard. Given the variations worldwide in defining the ground motion, it was decided that the local regulation should set the requirements. However, the owner/specifying engineer for the tank should carefully consider the risk in selecting the appropriate design motion in areas outside the U.S. The API Seismic Task Group suggests that the 475 year event be the minimum basis for defining the site ground motion for tanks.

EC.4.1 Mapped ASCE 7 Methods

The ASCE 7 maximum considered earthquake response spectrum is shown in Figure EC.1. Figure EC.2 illustrates the notations used in developing the response spectrum for the maximum considered ground motion.

EC.4.2 Site-specific Spectral Response Accelerations

In most situations, a site-specific response spectrum approach is not required. See Figure EC.3. In the rare cases that a site-specific approach is necessary, the ASCE 7 approach was adopted into the Annex. To utilize this procedure, both a probabilistic and deterministic response spectrum is developed. The site specific value is then the *lesser* of the two values.

EC.4.2.1 Site-Specific Study

<none>

EC.4.2.2 Probabilistic Site-Specific MCE Ground Motion

<none>

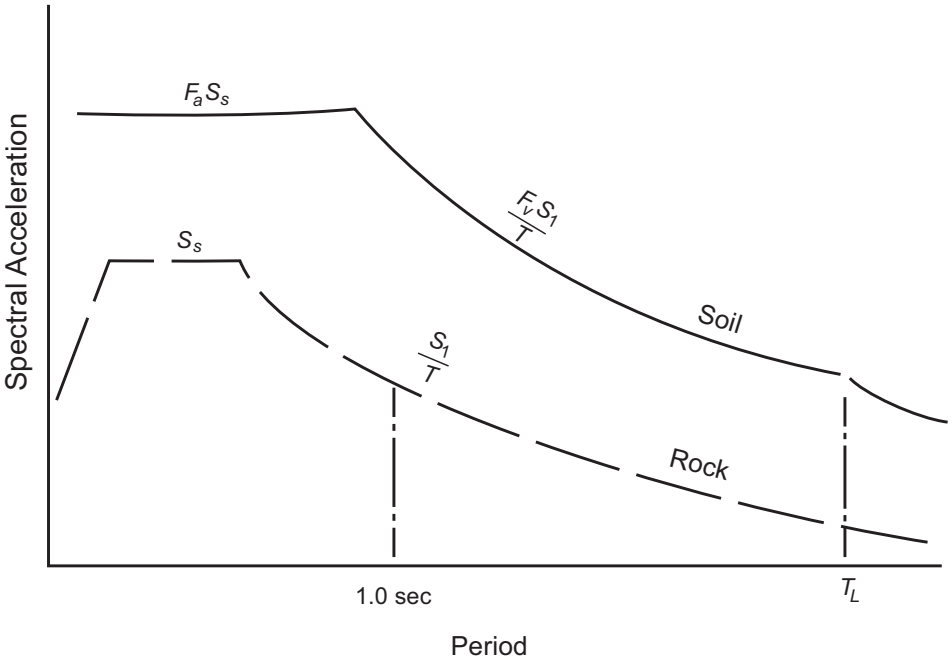

Figure EC.1—Maximum Earthquake Response Spectrum

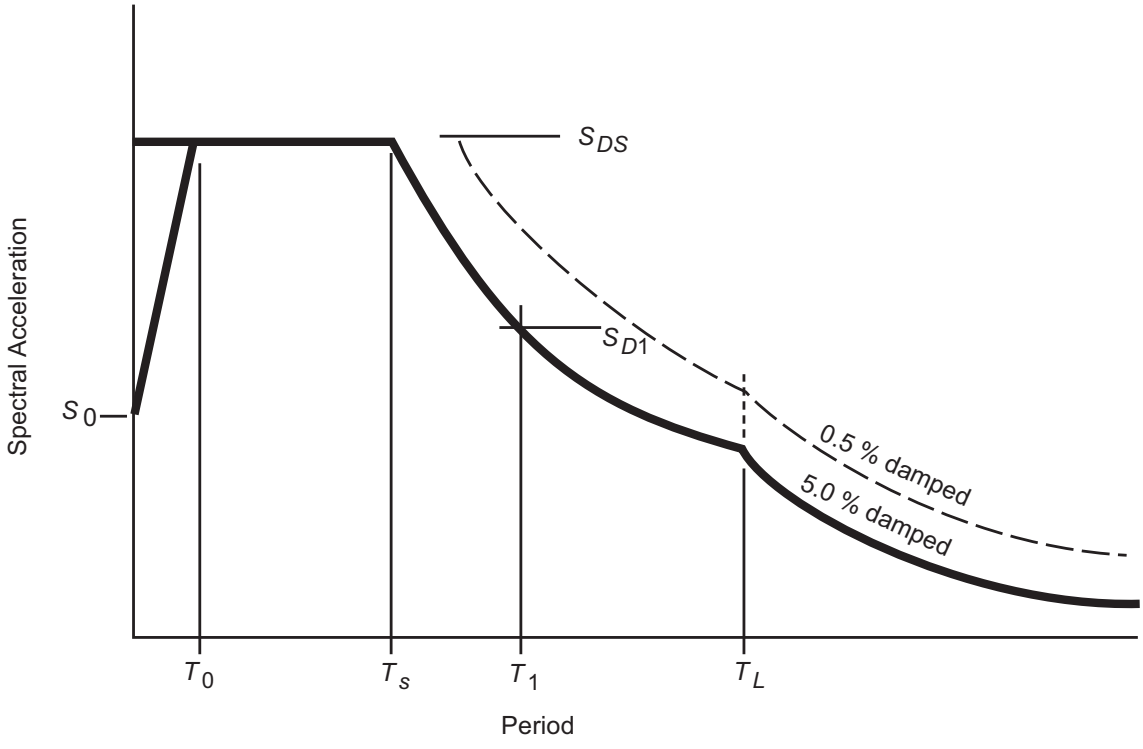

Figure EC.2—Earthquake Response Spectrum Notation

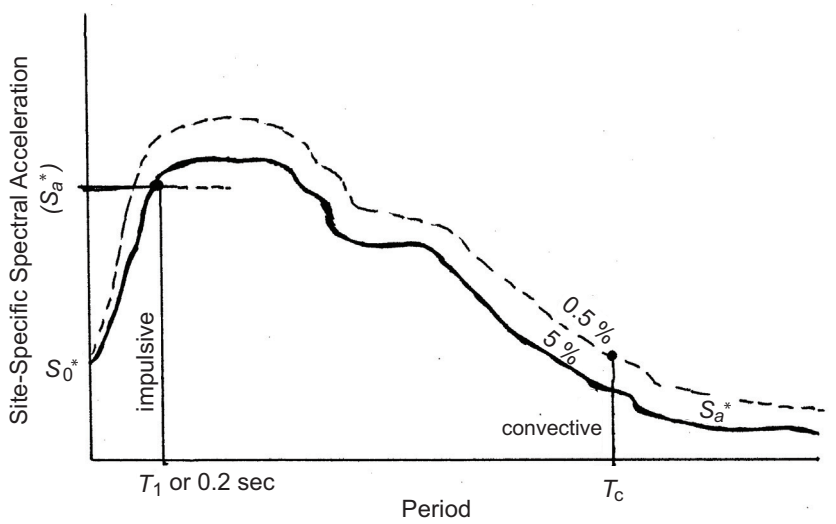

Figure EC.3—Site Specific Response Spectrum

EC.4.2.3 Deterministic Site-Specific MCE Ground Motion

In addition to the value determined for the characteristic earthquake acting on the known active faults, the deterministic values also have a lower bound limit as shown in Figure EC.4.

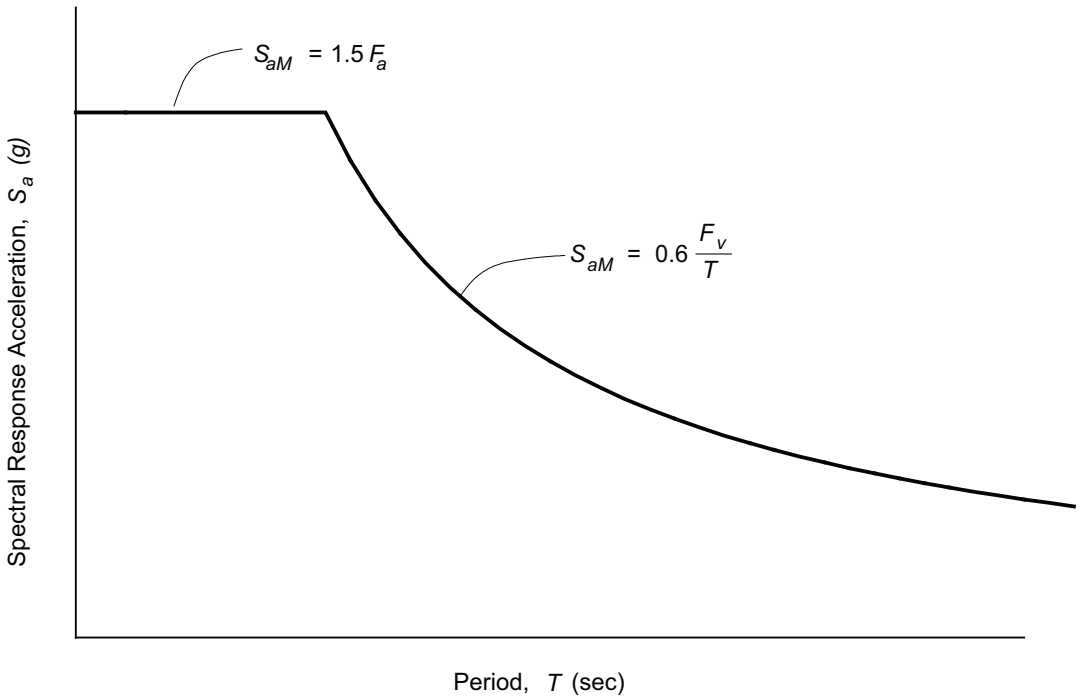

Figure EC.4—Deterministic Lower Limit on MCE Response Spectrum

EC.4.2.4 Site-Specific MCE Ground Motions

Figure EC.5 illustrates conceptually how these requirements might relate to define the site specific response spectrum.

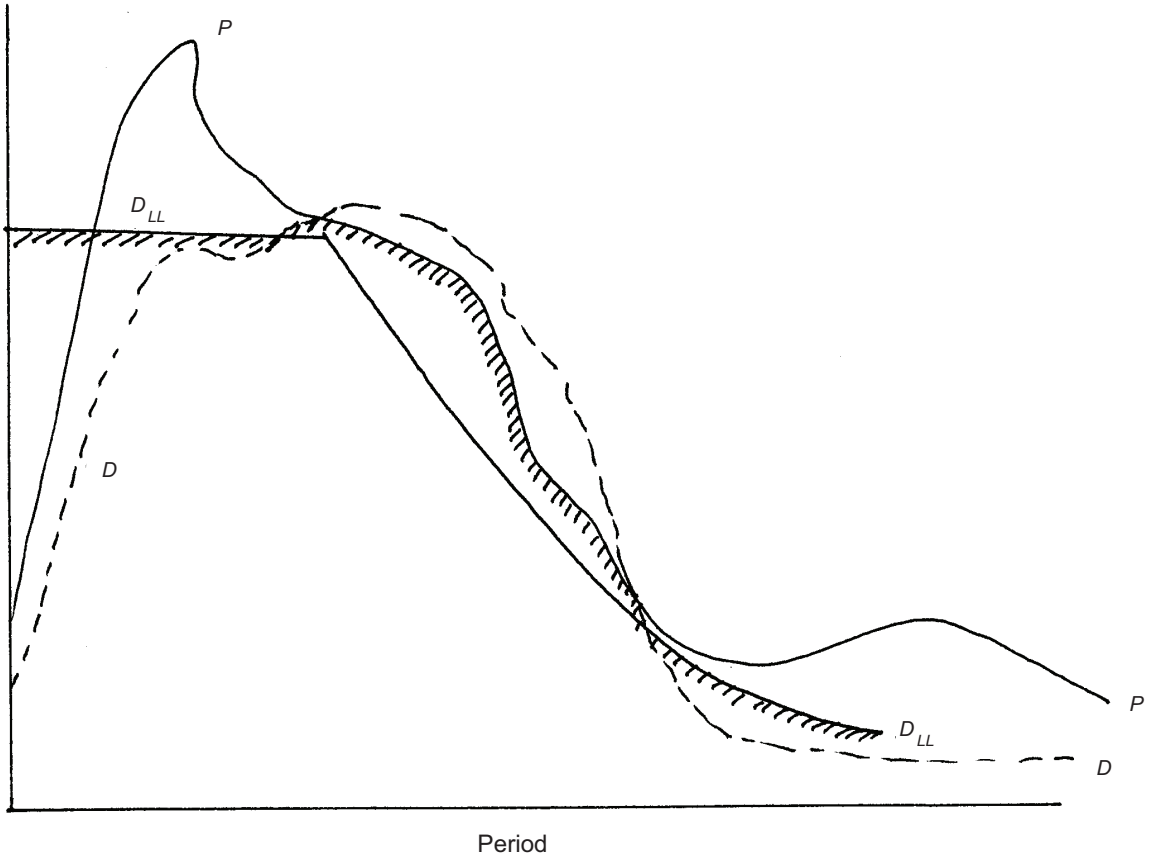

Figure EC.5—Relationship of Probabilistic and Deterministic Response Spectra

EC.4.3 Sites Not Defined By ASCE 7 Methods

The methods and equations in this Annex are best illustrated by a response spectrum curve. When the only definition of ground motion is the peak ground acceleration, the shape of the response spectrum is approximated to determine the spectral accelerations parameters. Consequently, the API Seismic Task Group recommended the relationship of S_1 and S_p defined in Equation E.4.3-2 as an approximation based on typical response spectrum curves encountered in design.

$$S_1 = 1.25S_p \tag{E.4.3-2}$$

Alternatively, if the applicable regulations have a means of determining the spectral response at the appropriate periods and damping values, those values (i.e. response spectrum) can be used, assuming that the other requirements of the Annex are met.

EC.4.4 Modifications for Site Soil Conditions

The ground motions must be amplified when the founding soils are not rock. In previous editions of the Annex, these adjustments only applied to the constant velocity and acceleration portions of the response. Since the mid-1990s,

there have been dual site factors as found in ASCE 7 to define the influence of the soil on the shape and values of the ground motions. The Annex utilizes this ASCE 7 approach.

Outside the U.S., local regulations may have alternate methods of defining the influence of the soil. Such alternate methods may be used; however, if no site amplifications are defined in the local regulations, then the ASCE 7 method of addressing site amplification is required.

EC.4.5 Structural Period of Vibration

EC.4.5.1 Impulsive Natural Period

To use the methods in this Annex, the impulsive seismic acceleration parameter is independent of tank system period unless a site-specific analysis or soil structure interaction evaluation is performed. The impulsive period of the tank is nearly always less than T_S, placing it on the plateau of the response spectra. Thus, the impulsive acceleration parameter is based directly on SDS. For special circumstances, a simplified procedure was included in the Annex to determine the impulsive period which was taken from the following reference:

"Simplified Procedure for Seismic Analysis of Liquid-Storage Tanks," Malhotra, P; Wenk, T; and Wieland, M. *Structural Engineering International,* March 2000.

EC.4.5.2 Convective (Sloshing) Period

For convenience, the graphical procedure for determining the sloshing period, T_c, is included here. See Equation E.4.5.2-b and Figure EC.5.

$$T_c = K_s\sqrt{D} \qquad \text{(E.4.5.2-b)}$$

where

D is the nominal tank diameter in ft;

K_S is the factor obtained from Figure EC.6 for the ratio D/H.

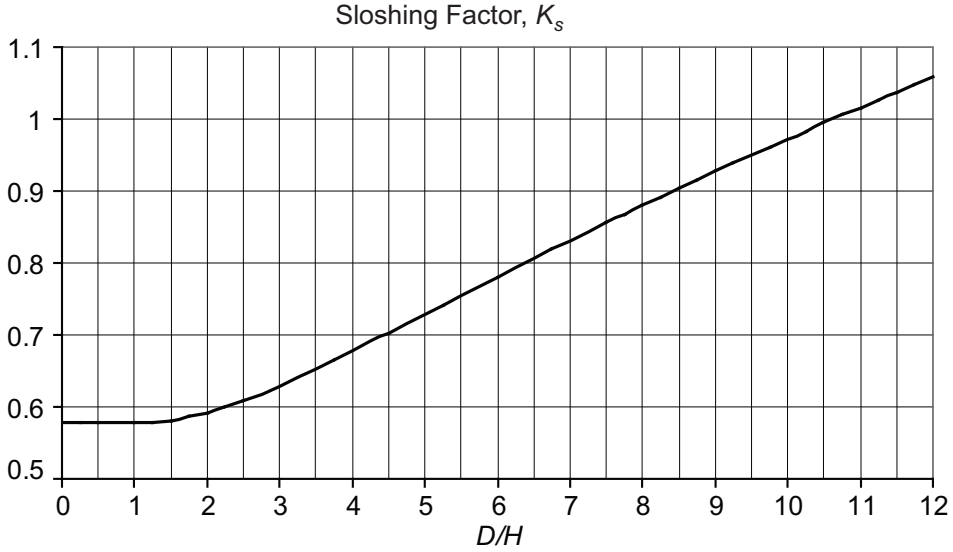

Figure EC.6—Sloshing Factor, K_s

EC.4.6 Design Spectral Response Accelerations

EC.4.6.1 Spectral Acceleration Coefficients

The acceleration parameters equations are based on the response spectrum pictured in Figure EC.7.

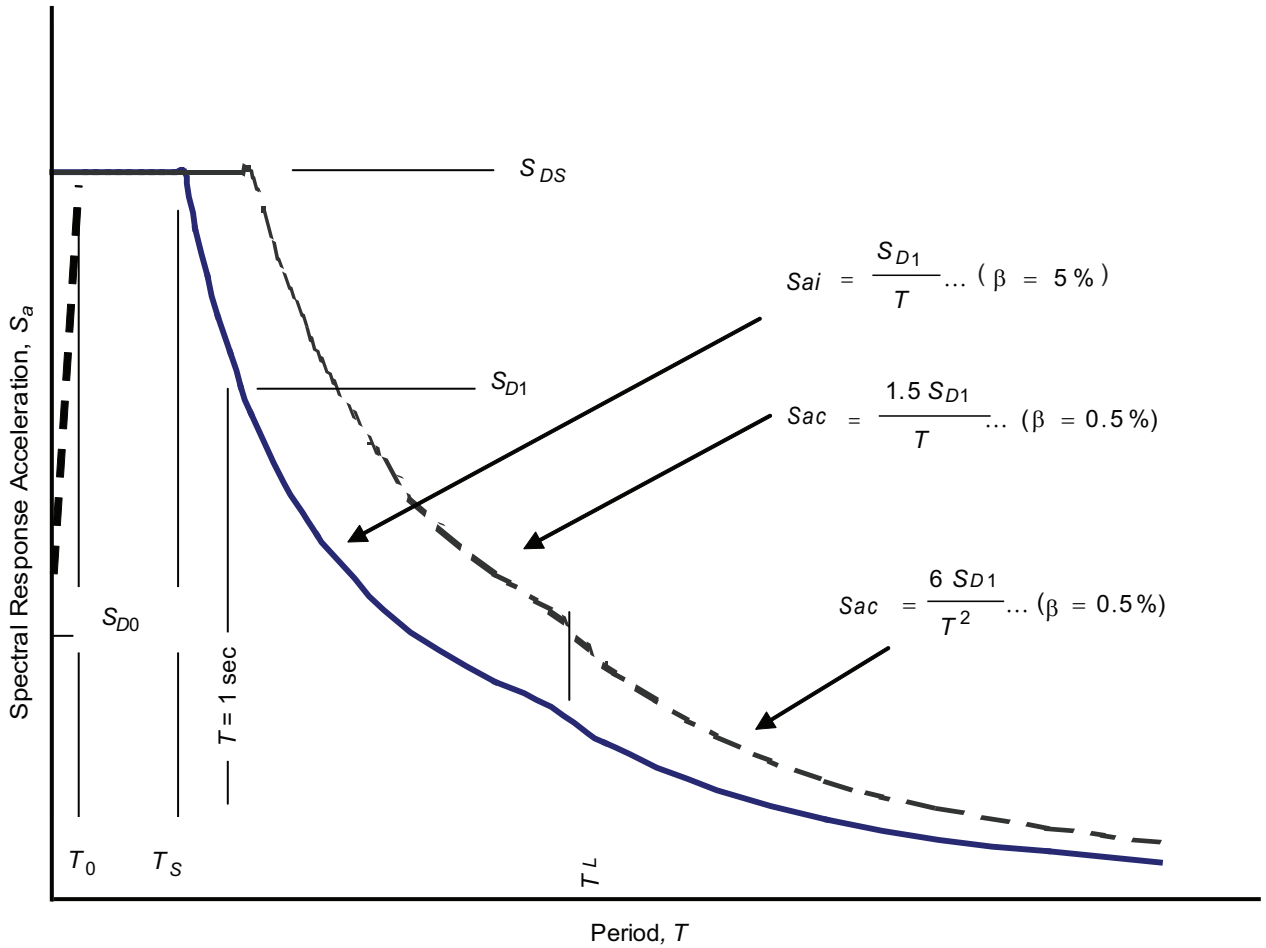

Figure EC.7—Design Response Spectra for Ground-Supported Liquid Storage Tanks

A "Q" term not included in the ASCE 7 is introduced in this Annex. "Q" is the scaling factor from the MCE, which is equal to $^2/_3$ for the ASCE 7 method. When using a recurrence interval of other than 2500 years, or another regulatory basis, "Q" should be set to the appropriate value; for most cases this is 1.0. For example, in a region outside the U.S. using the 475 year event, Q = 1.0.

For site-specific analysis, the impulsive spectral acceleration is limited to 1.5g. This is based on practical experience and observations of tank behavior. When tanks are lower profile, i.e., H/D < 0.8 and are either self- anchored or have long anchor bolt projections, the tanks can slide at the high impulsive accelerations. This sliding effectively limits the amount of force transferred into the tank. This limitation should not apply if the tank is prevented from sliding.

EC.5 Seismic Design Factors

EC.5.1 Design Forces

EC.5.1.1 Response Modification Factor

This Annex differentiates the response modification factors for impulsive and convective forces. The force reduction factor mimics the nonlinear response of the tank. There are three components to the force reduction factor R: (1) ductility R_μ, (2) damping R_β, and (3) over-strength R_Ω.

$$R = R_\mu \times R_\beta \times R_\Omega \qquad \text{(EC.5.1.1-1)}$$

The ductility reduction is to account for the force reduction associated with a more flexible response. The damping reduction is to account for the force reduction associated with increased system damping. The over-strength reduction is to account for the fact that the actual strength is higher than the calculated strength.

The convective response is generally so flexible (period between 2 and 10 seconds) that any increased flexibility due to non-linearity has negligible influence on the period and damping of the convective response. It is, therefore, not justified to apply the ductility and damping reductions to the convective response—however, the over-strength reduction can still be applied. In the absence of raw data, NEHRP Technical Subcommittee 13—Non-building Structures proposed a reduction in R_w for the convective forces. After additional discussion in the ASCE Seismic Task Group, R = 1.5 (or R_{WC} of approximately 2.0) was accepted.

EC.5.1.2 Importance Factor

<none>

EC.6 Design

EC.6.1 Design Loads

Historically, steel tank standards in the US have used the direct sum of the impulsive and convective forces. Other standards do not. For example, the SRSS method of combining the impulsive and convective components is used the New Zealand Standard NZS 3106. Here is what C2.2.9.4 (Commentary) of that standard says:

"*The periods of the inertia (ed. note: impulsive) and convective responses are generally widely separated, the impulsive period being much shorter than the convective period. When responses are widely separated, near-simultaneous occurrence of peak values could occur. However, the convective response takes much longer to build up than the impulsive response, consequently the impulsive component is likely to be subsiding by the time the convective component reaches its peak. It is thus recommended that the combined impulsive and convective responses be taken as the square root of the sum of the squares of the separate components.*"

A numerical study was undertaken by the NEHRP Technical Subcommittee 13—Non-building Structures to investigate the relative accuracy of "direct sum" and SRSS methods for combining the impulsive and convective responses. In this study: (1) the impulsive period was varied between 0.05 seconds and 1 second, (2) the convective period was varied between 1 second and 20 seconds; (3) the impulsive and convective masses were assumed equal, and (4) eight different ground motions from Northridge and Landers earthquake data were used.

While, the SRSS modal combination rule does not provide the worst possible loading, it does provide the most likely loading. It has been shown that this rule is suitable for combining the impulsive and convective (sloshing) responses in tanks.

Furthermore, it should be remembered that different portions of a site response spectrum are not controlled by the same seismic event. Whereas, the short-period spectral values, which determine the impulsive response, are controlled by the closer earthquakes, the long-period spectral values, which determine the convective response, are controlled by distant, larger earthquakes. Therefore, there is already some conservatism inherent in assuming that the impulsive and convective responses will occur simultaneously.

EC.6.1.1 Effective Weight of Product

For convenience, the relationships defined in the Annex equations are graphically illustrated in Figure EC.8.

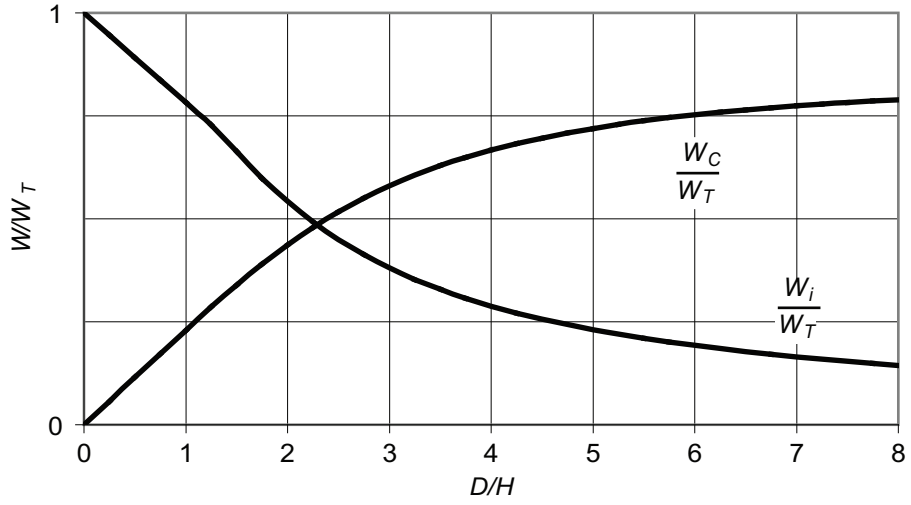

Figure EC.8—Effective Weight of Liquid Ratio

EC.6.1.2 Center of Action for Effective Forces

For convenience, the relationships defined in the Annex equations are graphically illustrated in Figure EC.9.

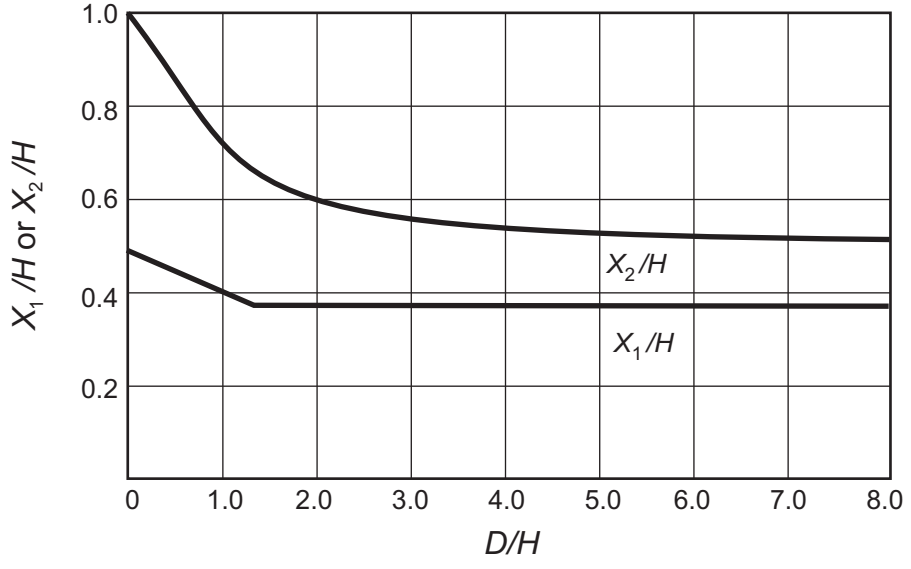

Figure EC.9—Center of Action of Effective Forces

EC.6.1.3 Vertical Seismic Effects

<none>

EC.6.1.4 Dynamic Liquid Hoop Forces

Calculations of hydrodynamic hoop forces were not included in previous editions of the Annex since it was not usually a governing condition for the typical petroleum storage tank. However, with larger diameter tanks, products with higher specific gravity, and vertical seismic effects, this additional check for hoop stresses was deemed to be necessary.

EC.6.1.5 Overturning Moment

<none>

EC.6.1.6 Soil-Structure Interaction

See the NEHRP Provisions, Chapter 5 for additional information. This is applicable to mechanically anchored tanks in this Annex. The complexity and state of technology for soil structure interaction evaluations of uplifting tanks and tanks with berm foundations was considered as beyond the scope of this Annex.

EC.6.2 Resistance To Design Loads

EC.6.2.1 Anchorage

Anchorage for overturning loads may be accomplished by the inherent tank configuration and product weight (self-anchored) or by adding mechanical devices (mechanically-anchored) such as anchor bolts or straps. If a tank satisfies the requirements for self anchorage, it should not be anchored.

The methods and load combinations used to design tank anchorage have proven to be satisfactory. Alternative methods for predicting annular plate behavior and anchor bolt loads have been proposed by various researchers. The API Seismic task Group believes that while some of these methods may more accurately depict the actual behavior of the tank, the added complexity does not significantly alter the anchorage design for the tanks usually constructed to API standards. Consequently, the simplified, but proven, method is retained.

EC.6.2.2 Maximum Longitudinal Shell Membrane Compression Stress

<none>

EC.6.2.3 Foundation

Using the calculated maximum toe pressure in the tank shell to satisfy equilibrium on self anchored flatbottom tanks produces impractical ringwall dimensions. Some yielding of soil (settlement) may occur under the shell requiring re-leveling of the tank after a seismic event. The foundations under flatbottom tanks, even tanks resting directly on earth foundations, have fared well under seismic loadings. Therefore, the seismic loading does not alter the foundation design criteria or provide justification for increased foundations for ringbearing plates.

A requirement for a mechanically-anchored tank stability check was added. This check assumes that the tank, product and foundation behave as a rigid body and is over-turning about the toe (i.e., base of the tank). This is not the actual behavior of the tank system but is a convenient model to use for checking the gross stability of the foundation. See Figure EC.10. The required factor of safety is 2.0 for this model.

EC.6.2.4 Hoop Stress

<none>

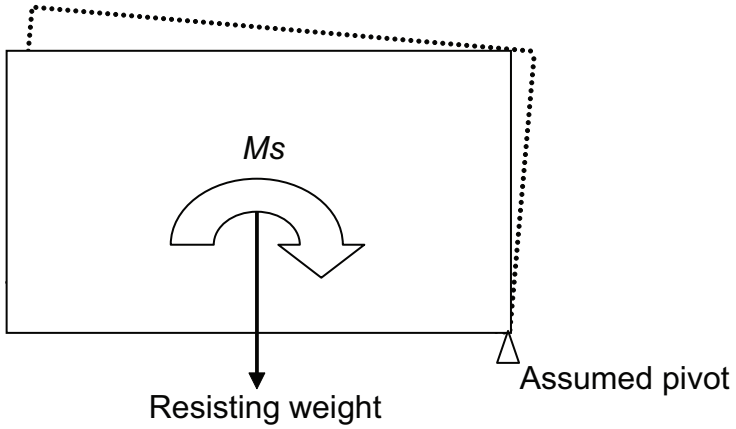

Figure EC.10—Overturning Moment

EC.7 Detailing Requirements

EC.7.1 Anchorage

EC.7.1.1 Self-Anchored

EC.7.1.1.1 Mechanically-Anchored

Although not the preferred solution for mechanical anchors, straps are permitted. However, if straps are utilized, proper details are vital to achieve the performance objective. The anchorage into the foundation should be mechanical, and not rely on bond strength alone. Since there are no direct technical testing methods for validation as exist for anchor bolts, the ability of the detail selected to yield the anchor strap should be demonstrated preferably by test or, at a minimum, by calculation.

The design and detailing of the strap should also allow for the commonly occurring corrosion of the strap near the foundation, while not providing too much steel area that reduces the desirable ductile stretching of the strap under overload. One solution is to contour the strap to produce reduced area over a portion of the strap length. See Figure EC.11.

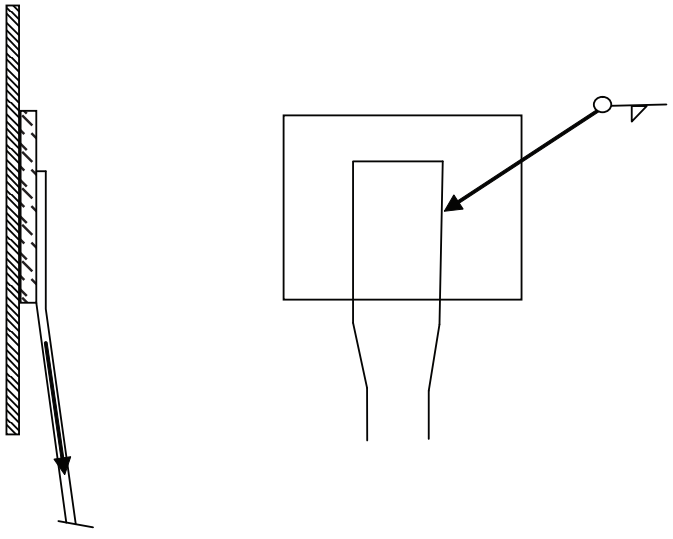

Figure EC.11—Anchor Strap Attachment to Shell

The connection to the shell is also often poorly detailed and stresses the attachment weld in the weak direction. Attaching the strap with a single horizontal fillet weld is not recommended. Attaching the strap to a thicker reinforcing plate may also be necessary to avoid over-stressing the shell. One method of detailing a strap is shown is Figure EC.11.

EC.7.2 Freeboard

Freeboard is provided to reduce potential operational damage to the upper shell and roof by the impingement of the sloshing wave. In some circumstances, this damage may include tearing of the roof to shell connection and release a small amount of product. However, in almost all cases, this damage is not a structural collapse mechanism but rather an issue of operational risk and repair cost. Designing the typical API style roof and shell to resist the sloshing wave is impractical.

In the rare situation that the these provisions are applied to a tank that is completely filled and no sloshing space is provided above the maximum operating level, the entire contents of the tank should be considered an impulsive mass.

EC.7.3 Piping Flexibility

Lack of sufficient piping flexibility has been one of the leading causes of product loss observed after an earthquake. Piping designers may not recognize the movements that the tank and foundation may experience and may not provide sufficient flexibility in the piping system and supports. This overstresses the pipe and tank shell, usually causing a piping break.

Piping designers should not assume that the tank is an anchor point to resist piping loads without carefully evaluating the mechanical loads on the tank, including the compatibility of displacement. While the tank shell is relatively stiff in reacting to loads applied in the vertical direction, in most cases it is not stiff relative to the piping for radial or rotational loads.

A table of design displacements is included in the Annex. See Table E.8. These values are a compromise of practical design considerations, economics and the probability that the piping connection will be at the point of maximum uplift. If one “estimated” the tank uplift using the simplified model in the Annex, the uplift will often exceed the values in Table E-8 unless the tank is in lower ground motion regions.

Mechanically anchoring the tank to reduce piping flexibility demands should be a “last resort.” The cost of anchoring a tank that otherwise need not be anchored will often be larger than altering the piping configuration. The cost of the anchors, the foundation, and the attachment details to the shell must be weighed against piping flexibility devices or configuration changes.

Some tank designers incorporate under-bottom connections attached to the bottom out of the uplift zone. This is potentially problematic in areas where high lateral impulsive ground motion may cause the tank to slide. The tank sliding may cause a bottom failure. Properly detailed connections though the cylindrical shell are preferred.

EC.7.3.1 Method for Estimating Tank Uplift

<none>

EC.7.4 Connections

<none>

EC.7.5 Internal Components

Buckling of the roof rafters perpendicular to the primary direction of the lateral ground motion has been observed after some events. Initially, this damage was thought to be impingement damage to the rafter from the sloshing of the liquid. Presently, this buckling behavior is believed to be the result of the tendency of the flexible tank wall to oval, creating a compressive force perpendicular to the direction of the ground motion. Allowing these rafter to slip, or including an "accidental" compression load in the design of the rafter is recommended.

EC.7.6 Sliding Resistance

<none>

EC.7.7 Local Shear Transfer

<none>

EC.7.8 Connections with Adjacent Structures

<none>

EC.7.9 Shell Support

<none>

EC.7.10 Repair, Modification, or Reconstruction

<none>

EC.8 Additional Reading

The following references are part of a large body of work addressing the behavior of tanks exposed to seismic ground motion.

[1] Hanson, R.D., *Behavior of Liquid Storage Tanks*, Report, National Academy of Sciences, Washington D.C., 1973, pp. 331 – 339.

[2] Haroun, M.A., and Housner, G.W., "Seismic Design of Liquid Storage Tanks," *Journal of Technical Councils*, ASCE, Vol. 107, April 1981, pp. 191 – 207.

[3] Housner, G.W. 1954, *Earthquake Pressures on Fluid Containers*, California Institute of Technology.

[4] Malhotra, P.K., and Veletsos, A.S., "Uplifting Analysis of Base Plates in Cylindrical Tanks," *Journal of Structural Division,* ASCE, Vol. 120, No. 12, 1994, pp. 3489 – 3505.

[5] Malhotra, P.K., and Veletsos, A.S., *Seismic response of unanchored and partially anchored liquid-storage tanks*, Report TR-105809. Electric Power Research Institute. Palo Alto. 1995.

[6] Malhotra, P; Wenk, T; and Wieland, M., "Simplified Procedure for Seismic Analysis of Liquid-Storage Tanks," *Structural Engineering International,* March 2000.

[7] Manos, G. C.; Clough, R. W., *Further study of the earthquake response of a broad cylindrical liquid-storage tank model*, Report EERC 82-07, University of California, Berkeley, 1982.

[8] New Zealand Standard NZS 3106.

[9] Peek, R., and Jennings, P.C., "Simplified Analysis of Unanchored Tanks," *Journal of Earthquake Engineering and Structural Dynamics*, Vol. 16, No. 7, October 1988, pp. 1073 – 1085.

[10] Technical Information Document (TID) 7024, *Nuclear Reactors and Earthquakes*, Chap. 6 and Annex F. Published by Lockheed Aircraft Corporation under a grant from the US Dept. of Energy (formerly US Atomic Energy Commission), 1963.

[11] Veletsos, A.S., *Seismic Effects in Flexible Liquid Storage Tanks*, Proceedings of the 5th World Conference on Earthquake Engineering, Rome, Italy, Vol. 1, 1974, pp. 630 – 639.

[12] Veletsos, A.S.; Yang. J. Y., *Earthquake response of liquid storage tanks*, Proceedings of the Second Engineering Mechanics Specialty Conference. ASCE. Raleigh. 1977. pp. 1 – 24.

[13] Veletsos, A.S., "Seismic response and design of liquid storage tanks," *Guidelines for the Seismic Design of Oil and Gas Pipeline Systems*, ASCE. New York. 1984 pp. 255 – 370.

[14] Wozniak, R.S., and W.W. Mitchell. 1978, *Basis of Seismic Design Provisions for Welded Steel Oil Storage Tanks*, 1978 Proceedings—Refining Dept., Washington, D.C.: American Petroleum Institute. 57:485 – 501.

EC.9 Example Problems

1) Determining Spectral Acceleration Parameters Using ASCE 7 Method

2) Determining Spectral Acceleration Parameters Using Peak Ground Acceleration

3) Determining Spectral Acceleration Parameters Using Site-specific Response Spectrum

4) Calculating Impulsive, Convective and Combined Overturning Moment and Base Shear

5) Calculating Anchorage Ratio "J" and Self-Anchored Annular Plate

6) Calculating Hydrodynamic Hoop Stresses

7) Calculating the Overturning Stability Ratio

EC.9.1 Example Problem #1

EC.9.1.1 Determining Spectral Acceleration Parameters Using ASCE 7 Method

Required for U.S. Locations.

Seismic ground motion parameters may be determined from the ASCE 7 maps (this may be difficult in some locations due to scale); or, using digital data from USGS or IBC CD-ROM.

The results from the USGS web site for an assumed location, using the 2002 values: http://eqhazmaps.usgs.gov/index.html.

The ground motion values for the requested point:			
LOCATION	35 Lat. – 118 Long.		
DISTANCE TO			
NEAREST GRID POINT	0.00 kms		
NEAREST GRID POINT	35.00 Lat. – 118.00 Long.		
Probabilistic ground motion values, in %g, at the Nearest Grid point are:			
10 %PE in 50 yr		2 % PE in 50 yr	
PGA	23.00	38.22	<< S_o
0.2 sec SA	54.56	92.65	<< S_s
1.0 sec SA	25.35	42.09	<< S_1

Similarly, using the IBC 2000 CD-ROM *

Selecting S_s and S_1

API 650 Annex EC Example Problem	
MCE Parameters — Conterminous 48 States	
Latitude = 35.0000, Longitude = –118.0000	
Data are based on the 0.01 deg grid set	
Period SA	
(sec)	(%g)
0.2	102.7 Map Value, Soil Factor of 1.0
1.0	42.0 Map Value, Soil Factor of 1.0

Comparing to ASCE 7-02 Map, Figure 9.4.1.1(c) *

$$S_s = 100\ \%\ g$$

$$S_1 = 42\ \%\ g$$

* The ABC 2000 and ASCE 7 values are based on the USGS 1996 values. These values will be used for the example problems. The user should note that these maps are likely being revised in the later editions of these documents.

Therefore, use $S_s = 103\ \%\ g$, $S_1 = 42\ \%\ g$ and $S_0 = 38\ \%\ g$

$$S_s = 103\ \%\ g$$

$$S_1 = 42\ \%\ g$$

$$S_0 = 38\ \%\ g$$

For this site, (from ASCE 7 maps)

$$T_L = 12 \text{ seconds}$$

Assuming Site Class D, and interpolating

F_a = 1.09

(See E.4.4)

F_v = 1.58

Q = 0.67 for ASCE methods

Therefore

$S_{DS} = QF_aS_s$ = 75 % g

$S_{D1} = QF_vS_1$ = 44 % g

$S_{D0} = QS_0$ = 25 % g

$T_s = S_{D1}/S_{DS}$ = 0.59 seconds

$T_o = 0.2S_{D1}/S_{DS}$ = 0.12 seconds

The response spectrum can now be constructed (does not include I/R_w)

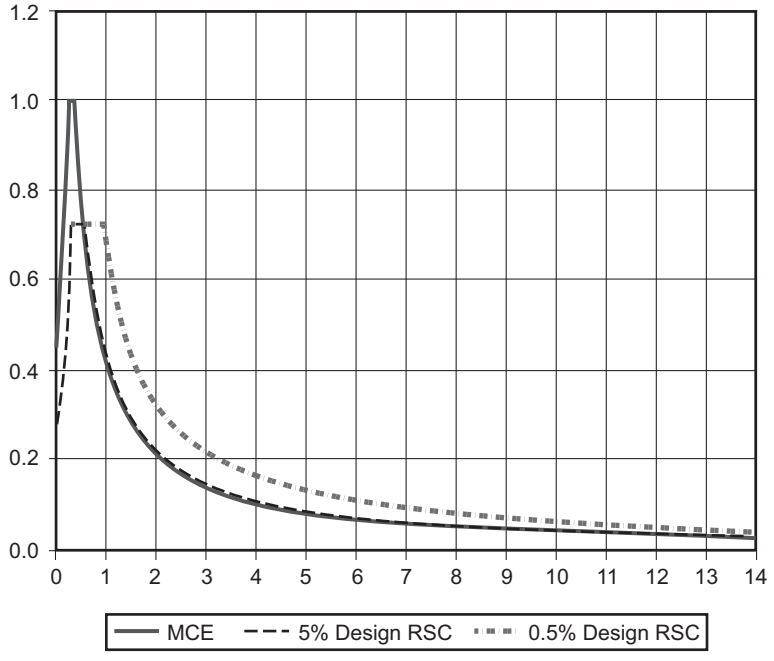

EC.9.1.2 Determine Spectral Acceleration Coefficients (See E.4.6.1)

Given:

Assume tank is self-anchored, R_w = 3.5 (see E.5.1.1)

SUG I applies, I = 1.0

Tank Diameter, D = 100 ft

Product Height, H = 40 ft

EC.9.1.3 Impulsive

$$A_i = S_{DS}\left(\frac{I}{R_{wi}}\right) = 0.75\left(\frac{1.0}{3.5}\right) = 0.21 > 0.007 \quad \text{(E.4.6.1-1)}$$

EC.9.1.4 Convective

Per E.4.5.2,

$T_c = 6.09$ seconds $< T_L$

$$A_c = KS_{D1}\left(\frac{1}{T_c}\right)\left(\frac{I}{R_{wc}}\right) = 1.5(0.44)\left(\frac{1}{6.09}\right)\left(\frac{1.0}{2}\right) = 0.054 \le .21 \quad \text{(E.4.6.1-4)}$$

EC.9.2 Example Problem #2

EC.9.2.1 Determining Spectral Acceleration Parameters Using Peak Ground Acceleration

For regions outside the U.S. where applicable.

For the same tank in Example #1, located outside the U.S.

See E.4.3.

Assuming the only parameter given is the 475 year peak ground acceleration (damping = 5 %).

This is comparable to the '*Z*' used in the earlier editions of the UBC.

Assume that regulations do not provide response spectrum.

Since 475 year recurrence interval is basis of peak ground acceleration, *Q* = 1.0 (no scaling).

Determine parameters:

$S_p = 0.23\ \%g$ << given See Ex #1, USGS PGA for 10 % PE

$S_s = 2.5\ S_p = 0.58\ \%g$

$S_1 = 1.25\ S_p = 0.29\ \%g$

Assuming Site Class D, and interpolating.

No soil or site class parameters were given in the local regulations, use same as Example #1:

$F_a = 1.09$ (See E.4.4)

$F_v = 1.58$

$Q = 1.00$

S_0 is 475 year value

Therefore

$SDS = QF_aS_s s = 63\ \%\, g$

$S_{D1} = QF_vS_1 = 46\ \%\, g$

$SD_0 = QS_0 = 23\ \%\, g$

$T_s = S_{D1}/S_{DS} = 0.73$ seconds

$T_o = 0.2S_{D1}/S_{DS} = 0.15$ seconds

The response spectrum can now be constructed (does not include I/R_w)

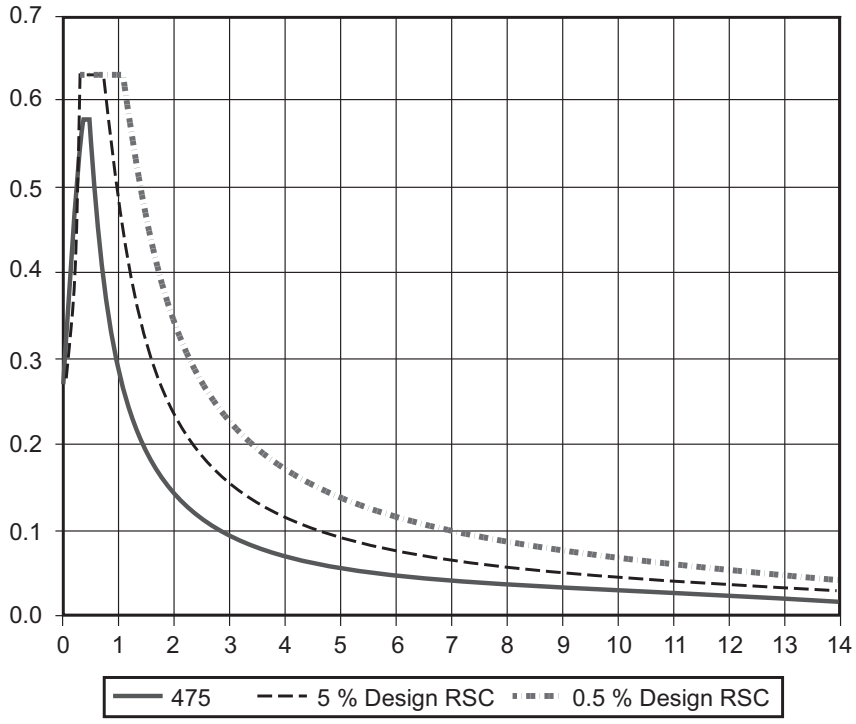

The remaining calculations are similar to those shown in Example #1.

EC.9.3 Example Problem #3

EC.9.3.1 Determining Spectral Acceleration Parameters Using Site-Specific Response Spectrum

Given the following 2500 year recurrence interval site specific response spectrum.

Assume that the spectrum was developed according to the requirements of Annex E.

Also, assume that the soil/site class influences are included in the spectrum (i.e. F_a and F_v = 1.0)

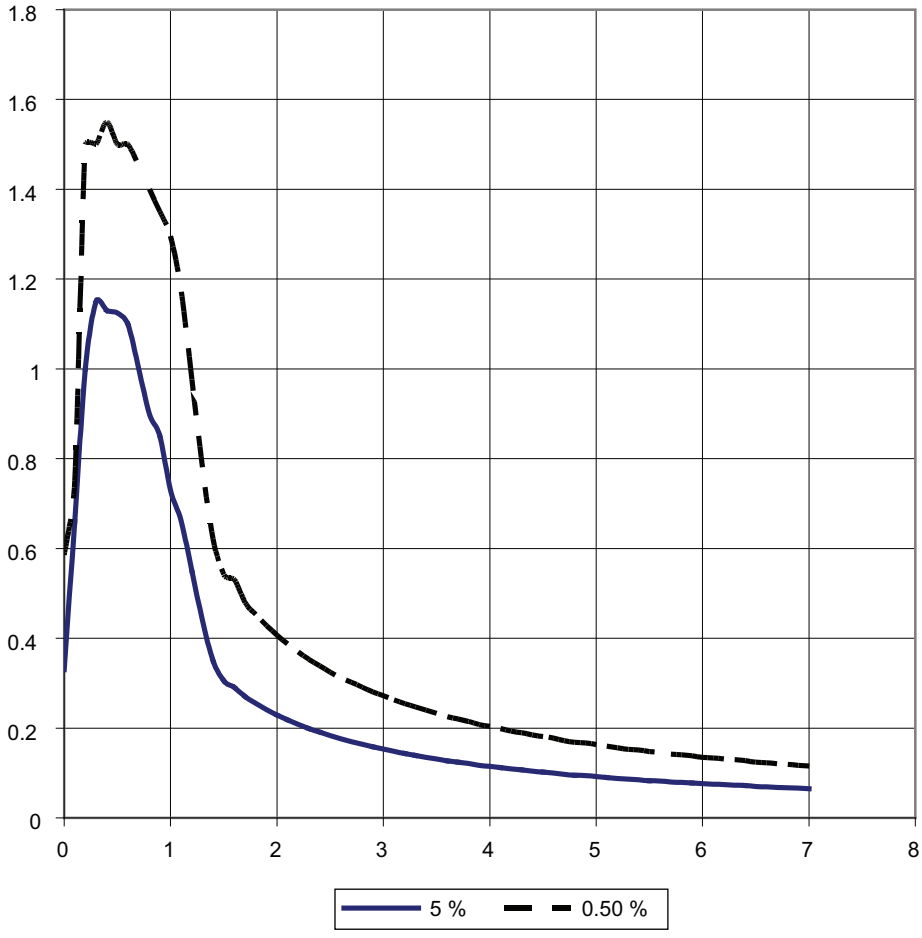

From this response spectrum select the peak ground acceleration, S_{a0}^* (the * denotes site-specific in Annex E nomenclature).

Using the 5 % curve:

$$S_{a0}^* = 0.33g$$

EC.9.3.2 Select the Impulsive Spectral Acceleration

There are two methods: 1) calculate the impulsive period per E.4.5.1, or Section 2) the more traditional approach—simply use the maximum value in the short period region of the curve. Using this second approach, and the 5 % spectrum:

$$S_{ai}^* = 1.15g$$

EC.9.3.3 Select the Convective Spectral Acceleration

Using the sloshing period form Example Problem #1, and reading from the 0.5 % curve, the convective spectral acceleration is:

$$S_{ac}^* = 0.13g$$

Assuming that the project specifications do not require designing for the 2500 year event, but follow Annex E:

Using Equation (E.4.6.2-1):

$$A_i = 2.5QS_{a0} * 0.550g \qquad \text{(E.4.6.2-1)}$$

Alliteratively, scale S_{ai}^* by the factor Q = 0.77g << USE

Similarly,

A_c = QS_{ac}^* = 0.087g << USE

These values of A_i and A_c may be substituted into the equations in Annex E.

EC.9.4 Example Problem #4

EC.9.4.1 Calculating Impulsive, Convective and Combined Overturning Moment and Base Shear

This problem illustrates the determination of the seismic base shear and overturning forces.

Known information about the tank:

H = 40 ft

D = 100 ft

G = 0.7

W_p = 13,722,000 lb, weight of product

W_s = 213,500 lb, weight of the shell

W_r = 102,100 lb, weight of the roof (an allowance for a snow load is not required for this site)

W_f = 80,900 lb, weight of the bottom

t_s = 0.5625 in., thickness of the bottom shell course

F_y = 30,000 psi for ASTM A283, Grade C material for the bottom plate welded to the shell

S_d = 20,000 psi for ASTM A283, Grade C material for the lowest shell course

X_s = 18.0 ft (this value was assumed to be 0.45 $\times$ H_t for this sample problem)

X_r = 41.0 ft (this value was assumed to be $H_t + 1$ for this sample problem)

I = 1.00 Seismic Use Group I for a self-anchored tank

R_w = 3.5

EC.9.4.2 Problem Solution

Per E.5.1 and E.6.1.6, the equivalent lateral seismic force is given by the square root sum of the squares combination impulsive and convective forces.

The seismic base shear is determined by Equation (E.6.1-1):

$$V = \sqrt{V_i^2 + V_c^2} \quad \text{(E.6.1-1)}$$

The seismic overturning moment at the base of the tank shell ringwall) is determined by Equation (E.6.1.5-1):

$$M_{rw} = \sqrt{[A_i(W_iX_i + W_sX_s + W_rX_r)]^2 + [A_c(W_cX_c)]^2} \quad \text{(E.6.1.5-1)}$$

EC.9.4.3 Determine the Impulsive Water Parameters

W_i, the impulsive weight

$D/H = 2.50 \geq 1.33$ Use Equation (E.6.1.1-1)

$$W_i = \frac{\tanh\left(0.866\frac{D}{H}\right)}{0.866\frac{D}{H}} W_p \quad \text{(E.6.1.1-1)}$$

$= 0.450 \times 13{,}722{,}000$

$= 6{,}173{,}000$ lb

X_i, the moment arm for the impulsive product mass, see Equation (E.6.1.2.1-1)

$$X_i = 0.375H = 15.0 \text{ ft} \quad \text{(E.6.1.2.1-1)}$$

A_i, the impulsive spectral acceleration parameter was determined in Example Problem #1

$A_i = 0.21g$

EC.9.4.4 Determine the Convective Water Parameters

Determine W_i, the convective water weight using Equation (E.6.1.1-3)

$$W_c = 0.230\frac{D}{H}\tanh\left(\frac{3.67H}{D}\right) W_p \quad \text{(E.6.1.1-3)}$$

$= 0.517 \times 13{,}722{,}000$

$= 7{,}095{,}000$ lb

The sloshing period was determined in Example Problem #1:

$T_c = 6.08 \text{ seconds} < T_L = 12 \text{ seconds}$

A_c was determined in Example Problem #1:

$A_c = 0.054\text{g}$

X_c, the moment arm for the convective water mass is determined by Equation (E.6.1.2.1-3):

$$X_c = \left[1.0 - \frac{\cosh\left(\frac{3.67H}{D}\right) - 1}{\frac{3.67H}{D}\sinh\left(\frac{3.67H}{D}\right)}\right]H \qquad \text{(E.6.1.2.1-3)}$$

$$= 0.574 \times 40$$

$$= 23.0 \text{ ft}$$

EC.9.4.5 Determine the Seismic Base Shear

The impulsive component is determined by Equation (E.6.1-2):

$$V_i = A_i(W_s + W_r + W_f + W_i) \qquad \text{(E.6.1-2)}$$

$$= 0.21 \times 6{,}569{,}500$$

$$= 1{,}379{,}600 \text{ lb}$$

$A_i = 0.21g$

$W_s = 213{,}500$ lb

$W_r = 102{,}100$ lb

$W_f = 80{,}900$ lb

$W_i = 6{,}173{,}000$ lb

The convective component is determined by Equation (E.6.1-3):

$$V_c = A_c W_c \qquad \text{(E.6.1-3)}$$

$$= 0.054 \times 7{,}095{,}000$$

$$= 383{,}100 \text{ lb}$$

$A_c = 0.054g$

$W_c = 7{,}095{,}000$ lb

The seismic base shear is:

$$V = \sqrt{V_i^2 + V_c^2}$$

$$= 1{,}431{,}800 \text{ lb}$$

EC.9.4.6 Determine the Seismic Overturning Moment

The ringwall moment is determined by Equation (E.6.1.5-1):

$$M_{rw} = \sqrt{[A_i(W_iX_i + W_sX_s + W_rX_r)]^2 + [A_c(W_cX_c)]^2} \quad \text{(E.6.1.5-1)}$$

$A_i = 0.21g$

$W_i = 6{,}173{,}000$ lb

$X_i = 15.0$ ft

$W_s = 213{,}500$ lb

$X_s = 18.0$ ft

$W_r = 102{,}100$ lb

$X_r = 41.0$ ft

$= 0.21 \times 100{,}624{,}100$

$= 21{,}131{,}100$ ft-lb

$A_c = 0.054$g

$W_c = 7{,}095{,}000$ lb

$X_c = 23.0$ ft

$= 0.054 \times 162{,}874{,}400$

$= 8{,}795{,}200$ ft-lb

The seismic overturning moment at the base of the tank shell, M_{rw}, is 22,888,400 ft-lb.

EC.9.5 Example Problem #5

EC.9.5.1 Calculating Anchorage Ratio "*J*" and Self-Anchored Annular Plate

Determine if the tank is suitable for the seismic overturning forces without the need for anchors.

Consideration of vertical seismic accelerations are not considered for this problem (A_v = 0).

Known information for this tank:

D = 100 ft, diameter

t = 0.5625 in., the thickness of the lowest shell course

t_a = 0.25 in., the thickness of the bottom plate welded to the shell ft

H = 40 ft

G = 0.7

S_d = 20,000 psi for ASTM A283, Grade C material for the lowest shell course

F_y = 30,000 psi for ASTM A283, Grade C material for the bottom plate welded to the shell

M_{rw} = 22,888,400 ft-lb, the seismic overturning moment at the base of the tank

W_s = 213,500 lb, the weight of the shell

W_{rs} = 61,300 lb, weight of the roof supported by the shell (assumed 60 % of W_r without snow)

w_{rs} = 195 lb/ft, the weight of the roof supported by the shell

The resisting force for a self-anchored tank is determined by Equation (E.6.2.1.1-1b):

$$w_a = 7.9t_a\sqrt{F_yHG_e} \le 1.28\ HDG(1-A_v) \qquad \text{(E.6.2.1.1-1b)}$$

$$= 3584 \text{ lb/ft}$$

$$w_a = 1810 \text{ lb/ft}$$

The anchorage ratio, J is:

Using Equation (E.6.2.1.1.1-2):

$$w_t = \frac{W_s}{\pi D} + w_{rs} \qquad \text{(E.6.2.1.1.1-2)}$$

$$= 680 + 195$$

$$= 875 \text{ lb/ft}$$

Applying this to Equation (E.6.2.1.1.1-1):

$$J = \frac{M_{rw}}{D^2[w_t(1-0.4A_v) + w_a - 0.4w_{int}]} \qquad \text{(E.6.2.1.1.1-1)}$$

= $0.853 < 1.54$, therefore tank is stable

For purposes of demonstration, assume M_{rw} is doubled and J is = 1.71 > 1.54, therefore tank is not stable.

With this increased load, this tank does not meet the stability requirements with a 1/4 in. thick bottom plate under the shell. Try a thickened annular plate.

Determine the required bottom thickness in order to avoid the addition of tank anchorage.

By trial-and-error, a 0.4375 in. thick annular ring will be used.

Recalculating:

t_a = 0.4375 in.

w_a = 3168 lb/ft

J = $0.566 < 1.54$, therefore tank is now stable

The minimum width of the butt welded annular ring to be provided (inside the tank) is calculated by Equation (E.6.2.1.1.2-1b):

$$L = 0.216 t_a \sqrt{F_y / HG} \qquad \text{(E.6.2.1.1.2-1b)}$$

= 3.09 ft = 37.1 in.

but, L to exceed $0.035D$ = 3.50 ft = OK

A 0.4375 in. thickened annular plate projecting at least 37.1 in. inside the tank shell is OK providing, the check the vertical shell compression due to seismic overturning forces is met.

J = 0.566, no calculated uplift

$$\sigma_c = \left(w_t (1 + 0.4 A_v) + \frac{1.273 M_{rw}}{D^2} \right) \frac{1}{12 t_s}$$

= 993 psi

The allowable shell compression is calculated by the following equation:

$$GHD^2 / t^2 = 884,938 < 1,000,000$$

The allowable compression is given by Equation (E.6.2.2.3-2b):

$$F_C = 10^6 \, t_s / (2.5D) + 600 \sqrt{(GH)} \qquad \text{(E.6.2.2.3-2b)}$$

= 4925 psi > 993 psi = OK

EC.9.6 Example Problem #6

EC.9.6.1 Calculating Hydrodynamic Hoop Stresses

See E.6.1.4.

Consider both lateral and vertical accelerations.

The owner has specified a vertical acceleration of 12.5 %g.

Known information about the tank:

H = 40 ft

D = 100 ft

G = 0.7

t_s = 0.5625 in., thickness of the bottom shell course

F_y = 30,000 psi for ASTM A283, Grade C material for the bottom plate welded to the shell

S_d = 20,000 psi for ASTM A283, Grade C material for the lowest shell course

E = 1.0 weld joint efficiency

A_i = 0.210 g

A_c = 0.054 g

A_v = 0.125 g

The product hydrostatic membrane hoop load at the base of the tank is:

$$N_h = 2.6(H-1)DG$$

= 7098 lb/in.

The impulsive hoop membrane hoop force at the base of the tank is calculated by Equation (E.6.1.4-1b):

$D/H = 2.5$ $Y = H = 40$ ft

$$N_i = 4.5A_iGDH\left[\frac{Y}{H} - 0.5\left(\frac{Y}{H}\right)^2\right]\tanh\left(0.866\frac{D}{H}\right) \quad \text{(E.6.1.4-1b)}$$

= 1312 lb/in.

The convective hoop membrane hoop load at the base of the tank is Equation (E.6.1.4-4b):

$D/H = 2.5$ $Y = H = 40$ ft

$$N_c = \frac{0.98A_cGD^2\cosh\left[\frac{3.68(H-Y)}{D}\right]}{\cosh\left[\frac{3.68H}{D}\right]} \quad \text{(E.6.1.4-4b)}$$

= 163 lb/in.

The total hoop stress, including lateral and vertical seismic accelerations per Equation (E.6.1.4-b):

$$\sigma_T = \sigma_h \pm \sigma_s = \frac{N_h \pm \sqrt{N_i^2 + N_c^2 + (A_vN_h)^2}}{t} \quad \text{(E.6.1.4-b)}$$

= 15,449 psi (max)

The allowable seismic hoop stress is the lesser of:

$1.333 \times S_d$ = 26,660 psi (GOVERNS) < 22,924 psi = OK

$0.9F_y$ = 27,000 psi

EC.9.7 Example Problem #7

EC.9.7.1 Calculating the Overturning Stability Ratio

See E.6.2.3.

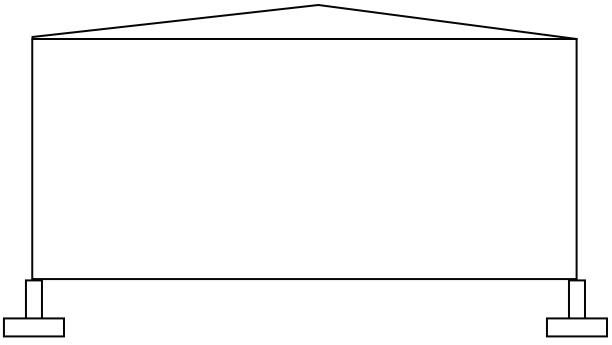

See Example Problem #4:

D = 100 ft

H = 40 ft

W_p = 13,722,000 lb weight of product

W_f = 80,900 lb weight of floor

W_T = 315,600 lb weight of tank

W_{fd} = 1,413,716 lb weight of foundation

W_g = 721,300 lb weight of soil over foundation

Assume M_s = 75,000,000 lb-ft:

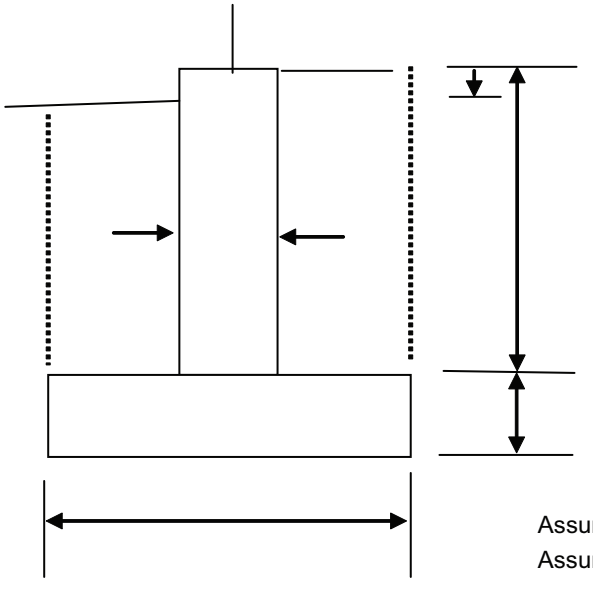

Assume concrete weighs 150 lbs/cf
Assume soil weighs 100 lbs/cf

Compute weight of foundation:

$$W_{fd} = 150\pi DA_{fd} = 150\pi(100)[(2\times 6)+(3\times 6)] = 1,413,716 \text{ lb}$$

Compute weight of soil over footing.

Outside ringwall:

$$W_{go} = 100\pi(D+4 \text{ ft})(2\times 5.5) = 359,400 \text{ lb}$$

$$W_{gi} = 100\pi(D-4 \text{ ft})(2\times 6) = 361,900 \text{ lb}$$

Summing:

$$W_g = 721{,}300 \text{ lbs}$$

Sum moments about toe of the tank, Equation (E.6.2.3-1):

$$\frac{0.5D[W_p + W_f + W_T + W_{fd} + W_g]}{M_s} \geq 2.0 \qquad \text{(E.6.2.3-1)}$$

$$= 10.8 > 2 = \text{OK}$$

Annex F
(normative)

Design of Tanks for Small Internal Pressures

F.1 Scope

F.1.1 The maximum internal pressure for closed-top API Standard 650 tanks may be increased to the maximum internal pressure permitted when the additional requirements of this Annex are met. This Annex applies to the storage of nonrefrigerated liquids (see also API 620, Annex Q and Annex R). For maximum design temperatures above 93 °C (200 °F), see Annex M.

F.1.2 When the internal pressure multiplied by the cross-sectional area of the nominal tank diameter does not exceed the nominal weight of the metal in the shell, roof, and any framing supported by the shell or roof, see the design requirements in F.2 through F.6. Overturning stability with respect to seismic conditions shall be determined independently of internal pressure uplift. Seismic design shall meet the requirements of Annex E.

F.1.3 Internal pressures that exceed the nominal weight of the shell, roof, and framing but do not exceed 18 kPa ($2^1/_2$ lbf/in.^{2}) gauge when the shell is anchored to a counterbalancing weight, such as a concrete ringwall, are covered in F.2 and F.7.

F.1.4 Tanks designed according to this Annex shall comply with all the applicable rules of this standard unless the rules are superseded by the requirements of F.7.

F.1.5 The tank nameplate (see Figure 10.1) shall indicate whether the tank has been designed in accordance with F.1.2 or F.1.3.

F.1.6 Figure F.1 is provided to aid in the determination of the applicability of various sections of this Annex.

F.2 Design Pressures up to 18 kPa (2.5 psi) Gauge

In calculating shell thickness for Annex F tanks and when selecting shell manhole thicknesses in Table 5-3a and Table 5-3b and flush-type cleanout fitting thicknesses in Table 5-10a and Table 5-10b, H shall be increased by the quantity $P/(9.8G)$ for SI units, or $P/(12G)$ for USC units—where H is the design liquid height, in m (ft), P is the design pressure kPa (in. of water), and G is the design specific gravity. Design pressures less than 1 kPa (4 in. of water) do not need to be included.

F.3 Roof Details

The details of the roof-to-shell junction shall be in accordance with Figure F.2, in which the participating area resisting the compressive force is shaded with diagonal lines.

F.4 Maximum Design Pressure and Test Procedure

F.4.1 The maximum design pressure, P, for a tank that has been constructed or that has had its design details established may be calculated from the following equation (subject to the limitations of $P_{\max}$ in F.4.2):

In SI units:

$$P = \frac{AF_y \tan\theta}{200D^2} + \frac{0.00127\ D_{LR}}{D^2}$$

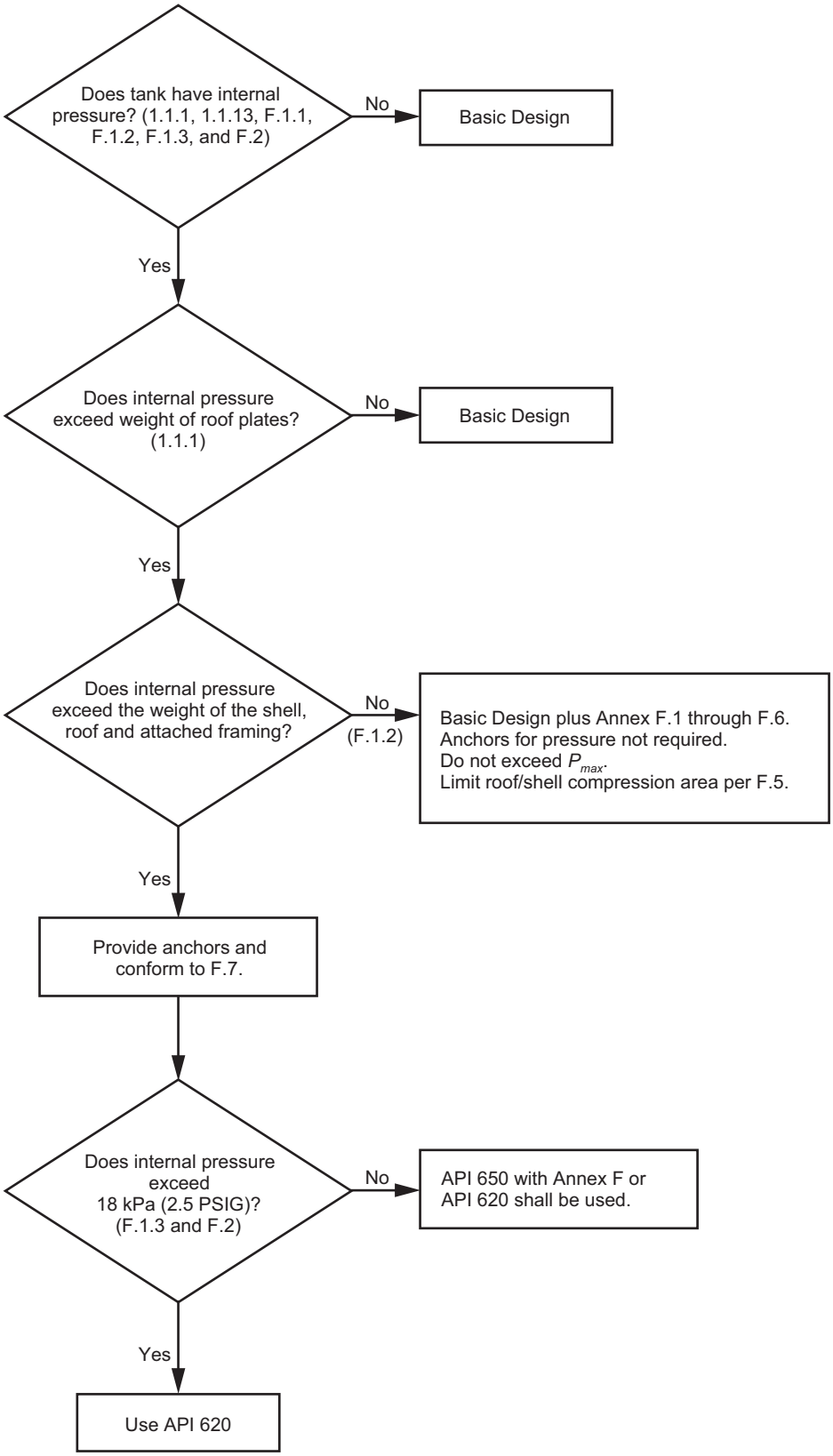

Figure F.1—Annex F Decision Tree

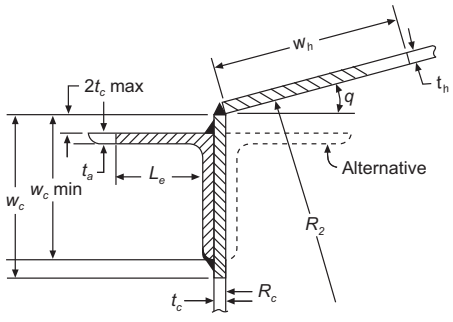

Detail a

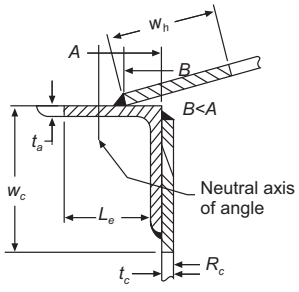

Detail b

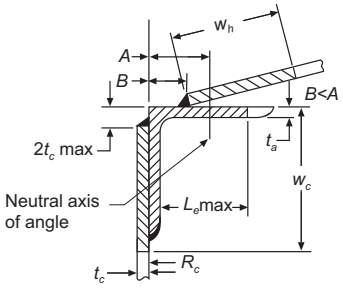

Detail c

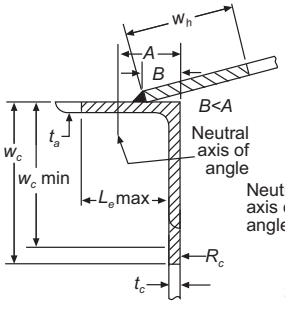

Detail d

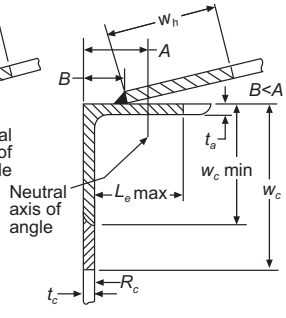

Detail e

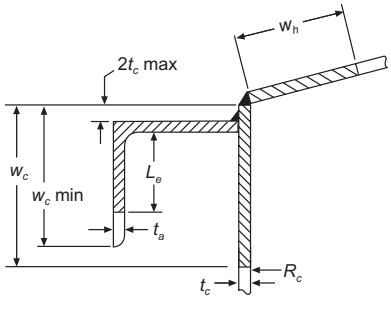

Detail f

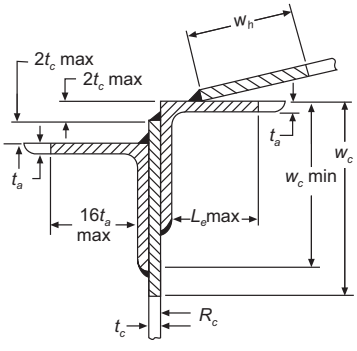

Detail g

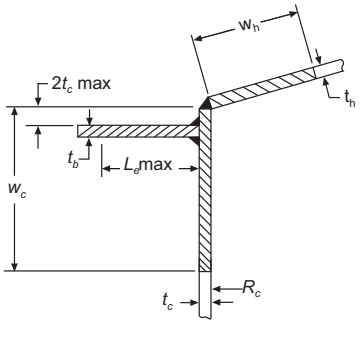

Detail h

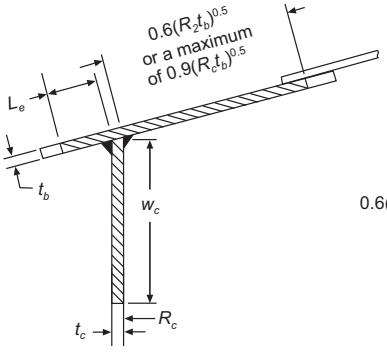

Detail i

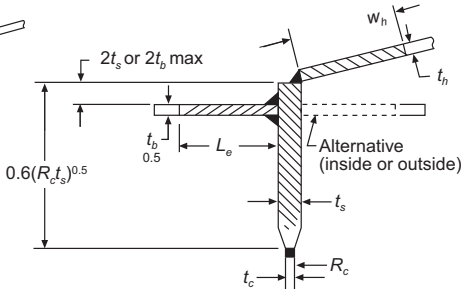

Detail k

where

t_a = thickness of angle leg
t_b = thickness of bar
t_c = thickness of shell plate
t_h = thickness of roof plate
t_s = thickness of thickened plate in shell
w_c = maximum width of participating shell = 0.6 $(R_c\ t)^{0.5}$, where $t = t_c$ or t_s as applicable.
w_h = maximum width of participating roof = 0.3$(R_2\ t_h)^{0.5}$ or 300 mm (12 in.) whichever is less.
R_c = inside radius of tank shell
R_2 = length of the normal to the roof, measured from the vertical centerline of the tank = R_c / (sin 8)

Figure F.2—Permissible Details of Compression Rings

where

P is the internal design pressure, in kPa;

A is the area resisting the compressive force, as illustrated in Figure F.1, in mm^2;

F_y is the lowest minimum specified yield strength (modified for design temperature) of the materials in the roof-to-shell junction, in MPa;

θ is the angle between the roof and a horizontal plane at the roof-to-shell junction, in degrees;

$\tan\theta$ is the slope of the roof, expressed as a decimal quantity;

D_{LR} is the nominal weight of roof plate plus any attached structural, in N.

In USC units:

$$P = \frac{(0.962)(AF_y)(\tan\theta)}{D^2} + \frac{0.245\ D_{LR}}{D^2}$$

where

P is the internal design pressure, in inches of water;

A is the area resisting the compressive force, as illustrated in Figure F.2, in inches^2;

F_y is the lowest minimum specified yield strength (modified for design temperature) of the materials in the roof-to-shell junction, in lb/inch^2;

θ is the angle between the roof and a horizontal plane at the roof-to-shell junction, in degrees;

$\tan\theta$ is the slope of the roof, expressed as a decimal quantity;

D_{LR} is the nominal weight of roof plate plus any attached structural, lbf.

F.4.2 For unanchored tanks, the maximum design pressure, limited by uplift at the base of the shell, shall not exceed the value calculated from the following equation unless further limited by F.4.3:

In SI units:

$$P_{\max} = \frac{0.000849 DL_S}{D^2} + \frac{0.00127\ D_{LR}}{D^2} - \frac{0.00153\ M_w}{D^3}$$

where

$P_{\max}$ is the maximum design internal pressure, in kPa;

D_{LS} is the nominal weight of the shell and any framing (but not roof plates) supported by the shell and roof, in N;

M_w is the wind moment, in N-m;

D_{LR} is the nominal weight of roof plate plus any attached structural, in N.

In USC units:

$$P_{\max} = \frac{0.1632\ DL_S}{D^2} + \frac{0.245\ D_{LR}}{D^2} - \frac{0.2938\ M_w}{D^3}$$

where

$P_{\max}$ is the maximum design internal pressure, in inches of water;

D_{LS} is the nominal weight of the shell and any framing (but not roof plates) supported by the shell and roof, in lbf;

M_w is the wind moment, in ft-lbf;

D_{LR} is the nominal weight of roof plate plus any attached structural, in lbf.

F.4.3 As top angle size and roof slope decrease and tank diameter increases, the design pressure permitted by F.4.1 and F.4.2 approaches the failure pressure of F.6 for the roof-to-shell junction. In order to provide a safe margin between the maximum operating pressure and the calculated failure pressure, a suggested further limitation on the maximum design pressure for tanks with a weak roof-to-shell attachment (frangible joint) is:

$$P_{\max} \le 0.8P_f$$

F.4.4 When the entire tank is completed, it shall be filled with water to the top angle or the design liquid level, and the design internal air pressure shall be applied to the enclosed space above the water level and held for 15 minutes. The air pressure shall then be reduced to one-half the design pressure, and all welded joints above the liquid level shall be checked for leaks by means of a soap film, linseed oil, or another suitable material. Tank vents shall be tested during or after this test.

F.5 Required Compression Area at the Roof-to-Shell Junction

- **F.5.1** Where the maximum design pressure has already been established (not higher than that permitted by F.4.2 or F.4.3, whenever applicable), the total required compression area at the roof-to-shell junction shall be calculated from the following equation:

In SI units:

$$A = \frac{200D^2\left(P_i - \dfrac{0.00127\ D_{LR}}{D^2}\right)}{F_y(\tan\theta)}$$

where

A is the total required compression area at the roof-to-shell junction, in mm^2;

P_i is the design internal pressure, in kPa;

D_{LR} is the nominal weight of roof plate plus any attached structural, in N.

In USC units:

$$A = \frac{D^2\left(P_i - \frac{0.245\ D_{LR}}{D^2}\right)}{0.962 F_y\ (\tan\theta)}$$

where

A is the total required compression area at the roof-to-shell junction, in inches^2;

P_i is the design internal pressure, in inches of water;

D_{LR} is the nominal weight of roof plate plus any attached structural, in lbf;

A is based on the nominal material thickness less any corrosion allowance.

F.5.2 For self-supporting roofs, the compression area shall not be less than the cross-sectional area calculated in 5.10.5 and 5.10.6.

F.6 Calculated Failure Pressure

Failure of the roof-to-shell junction can be expected to occur when the stress in the compression ring area reaches the yield point. On this basis, an approximate formula for the pressure at which failure of the top compression ring is expected (using conservative effective areas) to occur can be expressed in terms of the design pressure permitted by F.4.1, as follows:

In SI units:

$$P_f = 1.6\,P - \frac{0.000746\ D_{LR}}{D^2}$$

where

P_f is the calculated minimum failure pressure, in kPa;

D_{LR} is the nominal weight of roof plate plus any attached structural, in N.

In USC units:

$$P_f = 1.6\ P - \frac{0.147\ D_{LR}}{D^2}$$

where

P_f is the calculated minimum failure pressure, in inches of water;

D_{LR} is the nominal weight of roof plate plus any attached structural, in lbf.

NOTE Experience with actual failures indicates that buckling of the roof-to-shell junction is localized and probably occurs when the yield point of the material is exceeded in the compression area.

F.7 Anchored Tanks with Design Pressures up to 18 kPa (2 1/2 lbf/in.^{2}) Gauge

F.7.1 The required compression area at the roof-to-shell junction shall be calculated as in F.5.1, and the participating compression area at the junction shall be determined by Figure F.2. Full penetration butt welds shall be used to connect sections of the compression ring. For self-supporting roofs, the compression area shall not be less than the cross sectional area calculated in 5.10.5 or 5.10.6 as applicable. Materials for compression areas may be selected from API 650, Section 4, and need not meet toughness criteria of 4.2.9.

F.7.2 The design and welding of roofs and the design, reinforcement, and welding of roof manholes and nozzles shall be completed with consideration of both API 650 and API 620. The design rules shall be as follows.

1) The thickness of self supporting roofs shall not be less than required by API 620, 5.10.2, and 5.10.3, using API 650, Table 5.2, for allowable stresses and API 620, Table 5-2, for joint efficiency and radiography requirements. The thickness of self supporting roofs shall not be less than required by API 650, 5.10.5, or 5.10.6, as applicable.

2) Roof plate, manway and nozzle materials shall be selected from API 650, Section 4. Materials need not meet toughness criteria of 4.2.9.

3) Roof manways and roof nozzles shall meet the requirements of API 650, 5.7.1 through 5.7.6, for shell manways and nozzles. Where designed details for API 650 vary by height of liquid level, the values for the lowest liquid level may be used. Alternatively, roof manways and nozzles may be designed per API 620 using all the rules for API 620 roof manways and nozzles, including the 250 °F maximum design temperature limitation.

• **F.7.3** The design of the anchorage and its attachment to the tank shall be a matter of agreement between the Manufacturer and the Purchaser and shall meet the requirements of 5.12.

F.7.4 The counterbalancing weight, in addition to the requirements in 5.12, shall be designed so that the resistance to uplift at the bottom of the shell will be the greatest of the following.

a) The uplift produced by 1.5 times the design pressure of the corroded empty tank plus the uplift from the design wind velocity on the tank.

b) The uplift produced by 1.25 times the test pressure applied to the empty tank (with the nominal thicknesses).

c) The uplift produced by 1.5 times the calculated failure pressure (P_f in F.6) applied to the tank filled with the design liquid. The effective weight of the liquid shall be limited to the inside projection of the ringwall (Annex B type) from the tank shell. Friction between the soil and the ringwall may be included as resistance. When a footing is included in the ringwall design, the effective weight of the soil may be included.

F.7.5 After the tank is filled with water, the shell and the anchorage shall be visually inspected for tightness. Air pressure of 1.25 times the design pressure shall be applied to the tank filled with water to the design liquid height. The air pressure shall be reduced to the design pressure, and the tank shall be checked for tightness. In addition, all seams above the water level shall be tested using a soap film or another material suitable for the detection of leaks. After the test water has been emptied from the tank (and the tank is at atmospheric pressure), the anchorage shall be checked for tightness. The design air pressure shall then be applied to the tank for a final check of the anchorage.

Downloaded from http://pubs.acs.org by UNIV OF CALIFORNIA SAN DIEGO on 01/31/19
Use of the ACS Publications website and its content is subject to the ACS Terms and Conditions.

Annex G
(normative)

Structurally-Supported Aluminum Dome Roofs

G.1 General

G.1.1 Purpose

This Annex establishes minimum criteria for the design, fabrication, and erection of structurally-supported aluminum dome roofs. When this Annex is applicable, the requirements of 5.10 and the paragraphs in Annex F that deal with roof design are superseded. All other requirements of API Standard 650 shall apply, except that the maximum design temperature shall not exceed 90 °C (200 °F).

G.1.2 Definition

A structurally-supported aluminum dome roof is a fully triangulated aluminum space truss with the struts joined at points arrayed on the surface of a sphere. Aluminum closure panels are firmly attached to the frame members. The roof is attached to and supported by the tank at mounting points equally spaced around the perimeter of the tank.

G.1.3 General Application

G.1.3.1 New Tanks

When this Annex is specified for a new tank, the tank shall be designed to support the aluminum dome roof. The roof Manufacturer shall supply the magnitude and direction of all the forces acting on the tank as a result of the roof loads, together with details of the roof-to-shell attachment. The tank shall be designed as an open-top tank, and its wind girder shall meet the requirements of 5.9. The top of the tank shell shall be structurally suitable for attachment of the dome roof structure. The tank Manufacturer and the foundation designer shall be responsible for designing the tank and foundation, respectively, for the loads and moments transmitted from the roof, as provided by the roof manufacturer. If the Purchaser specifies a roof with fixed supports, the supports shall be rigidly attached directly to the tank and the top of the tank shall be designed to sustain the horizontal thrust transferred from the roof (see G.5.2). The as-built minimum and maximum diameter at the top of the tank shall be reported to the roof manufacturer by the Purchaser or the tank Manufacturer.

- #### G.1.3.2 Existing Tanks

When this Annex is specified for an aluminum dome roof to be added to an existing tank (with or without an existing roof), the roof Manufacturer shall verify that the tank has sufficient strength to support a new roof and meet the applicable requirements of Section 5.11. Information on the existing tank shall be provided by the Purchaser including minimum tank shell course thicknesses, tank shell course heights, design corrosion allowance, and existing anchorage details. The Purchaser shall specify the existing or new appurtenances to be accommodated by the roof Manufacturer. The roof Manufacturer shall supply the values of the forces acting on the tank as a result of the roof loads. The Purchaser shall verify the adequacy of the foundations. Unless otherwise specified, any reinforcement required to enable the tank to support the roof shall be the responsibility of the Purchaser. The design and erection of the roof shall accommodate the actual tank shape. The responsibility for determining the tank shape shall be specified by the Purchaser. The existing tank shall be equipped with a wind girder that meets the requirements of 5.9 for an open-top tank.

- #### G.1.3.3 Existing Tank Data Sheet

When an aluminum dome is ordered for an existing tank, a data sheet shall be completed by the Purchaser (see Figure G.1).

DATA SHEET FOR A STRUCTURALLY-SUPPORTED ALUMINUM DOME ADDED TO AN EXISTING TANK

JOB NO. _____ ITEM NO. _____
PURCHASE ORDER NO. _____
REQUISITION NO. _____
INQUIRY NO. _____
PAGE 1 OF 1 BY _____

(INFORMATION TO BE COMPLETED BY THE PURCHASER)

1. PURCHASER/AGENT _____
   ADDRESS _____
   CITY _____ STATE _____ ZIP _____
   PHONE _____ FAX _____
2. USER _____
3. ERECTION SITE:NAME OF PLANT _____
   LOCATION _____
4. TANK NO. _____
5. PUMPING RATES: IN _____ m^3/h (bbl/h) OUT _____ m^3/h (bbl/h)
6. MAXIMUM DESIGN TEMPERATURE _____ (NOT TO EXCEED 90 °C [200 °F])
7. DESIGN PRESSURE: ○ ATMOSPHERIC OR _____ kPa (in.) OF WATER (INDICATE WHETHER POSITIVE OR NEGATIVE)
8. ROOF LOADS: UNIFORM LIVE _____ kPa (lbf/ft^2)
   SPECIAL (PROVIDE SKETCH) _____ kPa (lbf/ft^2)
9. SEISMIC DESIGN: ○ YES ○ NO ○ APPENDIX E.4.4 ○ OR ALTERNATE SEISMIC CRITERIA _____
   IF APPENDIX E, CONTINUE HERE SEISMIC USE GROUP _____ MBE SITE CLASS _____
   BASIS OF LATERAL ACCELERATIONS (SELECT ONE):
   ○ MAPPED SEISMIC PARAMETERS, %g (E.4.1) S_S_____ S_1_____ S_0_____
   ○ SITE-SPECIFIC SPECTRAL RESPONSE ACCELERATIONS (E.4.2); MCE DESIGN REQUIRED ○ YES ○ NO
   ○ OTHER (NON-ASCE) METHODS _____
   VERTICAL SEISMIC DESIGN? ○ YES ○ NO; VERTICAL EARTHQUAKE ACCELERATION COEFFICIENT A_v, %*g*: _____
   GROUND SNOW LOAD (IF NOT FROM ASCE 7): _____ kPa (lbf/ft^2)
10. DESIGN WIND SPEED: (SELECT ONE) ○ 190 Km/h (120 mph)
    ○ PURCHASER SPECIFIED WIND SPEED (50-YHR MIN. 3-SEC GUST) _____Km/h (mph)
    ○ 3-SEC GUST FROM ASCE 7, FIGURE 6-1 _____Km/h (mph)
    IMPORTANCE FACTOR (IF OTHER THAN 1.0) _____
    EXPOSURE CATEGORY PER ASCE 7 _____
    _____ Km/h (mph)
11. MAXIMUM HEIGHT FROM TOP OF SHELL TO TOP OF DOME _____m (ft)
12. TANK SHELL THICKNESS (ACTUAL)

COURSE NUMBER	MINIMUM THICKNESS	TYPICAL THICKNESS	PLATE WIDTH
_____	_____	_____	_____
_____	_____	_____	_____
_____	_____	_____	_____
_____	_____	_____	_____
_____	_____	_____	_____
_____	_____	_____	_____

13. ACTUAL TANK STIFFENER DETAILS, POSITION AND DIMENSIONS (PROVIDE SKETCH)
14. GASES EXPECTED IN THE VAPOR SPACE _____
15. REQUIRED FREEBOARD ABOVE TOP OF TANK _____ mm (in.)
16. ACTUAL MINIMUM TANK DIAMETER AT THE TOP OF THE TANK _____m (ft)
    ACTUAL MAXIMUM TANK DIAMETER AT THE TOP OF THE TANK _____m (ft)
17. ELEVATION OF TOP OF TANK: MAXIMUM _____MINIMUM
18. BOTTOM THICKNESS AT THE TANK SHELL _____ mm (in.)
19. MAXIMUM THICKNESS LEVEL _____m (ft)
20. EXISTING ANCHORAGE DETAILS IF ANY: _____
21. LIST ALL APPURTENANCES, OTHER THAN THOSE TO BE REMOVED BY THE PURCHASER, AND INDICATE ACTION REQUIRED OF CONTRACTOR

APPURTENANCE	CONTRACTOR ACTION: REMOVE	CONTRACTOR ACTION: ACCOMMODATE
_____	○	○
_____	○	○
_____	○	○
_____	○	○
_____	○	○
_____	○	○
_____	○	○

Figure G.1—Data Sheet for a Structurally-Supported Aluminum Dome Added to an Existing Tank

G.1.4 Special Features

• G.1.4.1 Self-Supporting Structure

The aluminum dome roof shall be supported only from the rim of the tank. The design of the connection between the roof and the tank rim shall allow for thermal expansion. A minimum temperature range of ±70 °C (120 °F) shall be used for design unless a wider range is specified by the Purchaser.

• G.1.4.2 Finish

Unless otherwise specified, the aluminum dome roof materials shall have a mill finish.

G.1.4.3 Maintenance and Inspection

The roof Manufacturer shall provide a maintenance and inspection manual for roof items that may require maintenance, periodic inspection, or both.

• G.1.4.4 Jurisdictional Requirements

The Purchaser is required to provide all applicable jurisdictional requirements that apply to the aluminum dome roof (see 1.3).

G.2 Materials

• G.2.1 General

Materials furnished to meet the requirements of this Annex shall be new. A complete material specification shall be submitted by the roof Manufacturer for approval by the Purchaser. The materials shall be compatible with the product specified to be stored in the tank and the surrounding environment. No aluminum alloy with a magnesium content greater than 3 % shall be used when the maximum design temperature exceeds 65 °C (150 °F). Properties and tolerances of aluminum alloys shall conform to *Aluminum Standards and Data*, as published by the Aluminum Association (Washington, D.C.).

G.2.2 Structural Frame

Structural frame members shall be fabricated from 6061-T6 or a recognized alloy with properties established by the Aluminum Association, Inc.

G.2.3 Roof Panels

Roof panels shall be fabricated from Series 3000 or 5000 aluminum with a minimum nominal thickness of 1.20 mm (0.050 in.).

• G.2.4 Bolts and Fasteners

Fasteners shall be of 7075-T73 aluminum, 2024-T4 aluminum, austenitic stainless steel, or other materials as agreed to by the Purchaser. Only stainless steel fasteners shall be used to attach aluminum to steel.

G.2.5 Sealant and Gasket Material

G.2.5.1 Sealants shall be silicone or urea urethane compounds that conform to Federal Spec TT-S-00230C unless another material is required for compatibility with stored materials. Sealants shall remain flexible over a temperature

range of –60 °C to +150 °C (–80 °F to +300 °F) without tearing, cracking, or becoming brittle. Elongation, tensile strength, hardness, and adhesion shall not change significantly with aging or exposure to ozone, ultraviolet light, or vapors from the product stored in the tank.

G.2.5.2 Preformed gasket material shall be Neoprene, silicone, Buna-N, urea urethane, or EPDM elastomer meeting ASTM C509 or Federal Spec ZZ-R-765C unless another material is required for compatibility with stored materials.

G.2.6 Skylight Panels

Skylight panels shall be clear acrylic or polycarbonate with a minimum nominal thickness of 6 mm (0.25 in.).

G.3 Allowable Stresses

G.3.1 Aluminum Structural Members

Aluminum structural members and connections shall be designed in accordance with the *Aluminum Design Manual*, as published by the Aluminum Association, Inc. (Washington, D.C.), except as modified by this Annex.

G.3.2 Aluminum Panels

Aluminum panels shall be designed in accordance with S*pecifications for Aluminum Sheet Metal Work in Building Construction*, as published by the Aluminum Association, Inc. (Washington, D.C.) and this Annex. Attachment fasteners shall not penetrate both the panel and the flange of the structural member.

G.3.3 Bolts and Fasteners

G.3.3.1 The maximum stress in bolts and fasteners for any design condition shall not exceed the allowable stress given in Table G.1a and Table G.1b.

G.3.3.2 The hole diameter for a fastener shall not exceed the diameter of the fastener plus 1.5 mm ($^1/_{16}$ in.).

Table G.1a—Bolts and Fasteners (SI)

Materials	Allowable Tensile Stress[a,b] (MPa)	Allowable Shear Stress[a,b,c] (MPa)
Austenitic stainless steel[d]	172	124
Austenitic stainless steel[e]	234	172
2024-T4 aluminum	182	109
7075-T73 aluminum	201	120

[a] The root-of-thread area shall be used to calculate the strength of threaded parts.

[b] For seismic loads, these values may be increased by one-third.

[c] If the thread area is completely out of the shear area, the cross-sectional area of the shank may be used to determine the allowable shear load.

[d] For bolts with a minimum tensile strength of 620 MPa.

[e] For bolts with a minimum tensile strength of 860 MPa.

[f] For fasteners not shown, design shall be in accordance with the *Aluminum Design Manual*, as published by the Aluminum Association, Inc. (Washington, D.C.).

Table G.1b—Bolts and Fasteners (USC)

Materials	Allowable Tensile Stress[a,b] (ksi)	Allowable Shear Stress[a,b,c] (ksi)
Austenitic stainless steel[d]	25.0	18.0
Austenitic stainless steel[e]	34.0	25.0
2024-T4 aluminum	26.0	16.0
7075-T73 aluminum	28.0	17.0

[a] The root-of-thread area shall be used to calculate the strength of threaded parts.

[b] For seismic loads, these values may be increased by one-third.

[c] If the thread area is completely out of the shear area, the cross-sectional area of the shank may be used to determine the allowable shear load.

[d] For bolts with a minimum tensile strength of 90 ksi.

[e] For bolts with a minimum tensile strength of 125 ksi.

[f] For fasteners not shown, design shall be in accordance with the *Aluminum Design Manual*, as published by the Aluminum Association, Inc. (Washington, D.C.).

G.4 Design

G.4.1 Design Principles

G.4.1.1 The roof framing system shall be designed as a three-dimensional space frame or truss with membrane covering (roof panels) providing loads along the length of the individual members. The design must consider the increased compression induced in the framing members due to the tension in the roof panels.

G.4.1.2 The actual stresses in the framing members and panels under all design load conditions shall be less than or equal to the allowable stresses per the *Aluminum Design Manual*, as published by the Aluminum Association, Inc. (Washington, D.C.).

G.4.1.3 The allowable general buckling pressure p_a shall equal or exceed the maximum pressure given in R.1 (e).

$$p_a = \frac{16E\sqrt{I_x A}}{LR^2(SF)} \qquad \text{(G.4.1.3-1)}$$

where

E is the modulus of elasticity of the dome frame members;

I_x is the moment of inertia of frame members for bending in a plane normal to the dome surface;

A is the cross-sectional area of frame members;

R is the spherical radius of the dome;

L is the average length of the frame members;

SF is the safety factor = 1.65.

Alternatively, p_a shall be determined by a non-linear finite element analysis with a safety factor of 1.65.

G.4.1.4 The net tension ring area (exclusive of bolt holes and top flange protrusions) shall not be less than:

$$A_n = \frac{D^2 p}{8 F_t \tan\theta} \qquad \text{(G.4.1.4-1)}$$

where

A_n is the net area of tension ring;

D is the nominal tank diameter;

p is the maximum pressure given in R.1 (e);

θ is 1/2 the central angle of the dome or roof slope at the tank shell;

F_t is the least allowable stress for components of the tension ring.

NOTE This formula does not include bending stresses due to loads from the panel attached to the beam. These stresses must also be considered in the tension ring design per G.3.1.

G.4.2 Design Loads

G.4.2.1 Loads on Dome Roofs

Dome roofs shall be designed for:

a) the loads in 5.2.1;

b) the load combinations in 5.2.2 (a), (b), (c), (e), and (f).

G.4.2.2 Seismic Load

If the tank is designed for seismic loads, the roof shall be designed for:

a) a horizontal seismic force $F_h = A_i W_r$

b) a vertical seismic force $F_v = \pm A_v W_r$

where A_i, A_v, and W_r are as defined in Annex E. Forces shall be uniformly applied over the surface of the roof. Horizontal and vertical forces need not be applied simultaneously.

G.4.2.3 Panel Loads

G.4.2.3.1 Roof panels shall be of one-piece aluminum sheet (except for skylights as allowed by G.8.4). The roof shall be designed to support a uniform load of 3 kPa (60 lbf/ft^2) over the full area of the panel.

G.4.2.3.2 The roof shall be designed to support two concentrated loads 1100 N (250 lbf), each distributed over two separate 0.1 m^2 (1 ft^2) areas of any panel.

G.4.2.3.3 The loads specified in G.4.2.3.1 and G.4.2.3.2 shall not be applied simultaneously or in combination with any other loads.

G.4.3 Internal Pressure

Unless otherwise specified by the Purchaser, the internal design pressure shall not exceed the weight of the roof. In no case shall the internal design pressure exceed 2.2 kPa (9 in. of water) water column. When the design pressure, $P_{\max}$, for a tank with an aluminum dome roof is being calculated, the weight of the roof, including structure, shall be used for the D_{LR} term in F.4.2.

G.5 Roof Attachment

G.5.1 Load Transfer

Structural supports for the roof shall be bolted or welded to the tank. To preclude overloading of the shell, the number of attachment points shall be determined by the roof Manufacturer in consultation with the tank Manufacturer. The attachment detail shall be suitable to transfer all roof loads to the tank shell and keep local stresses within allowable limits.

G.5.2 Roof Supports

G.5.2.1 Sliding Supports

The roof attachment points may incorporate a slide bearing with low-friction bearing pads to minimize the horizontal radial forces transferred to the tank. The primary horizontal thrust transferred from the dome shall be resisted by an integral tension ring.

G.5.2.2 Fixed Supports

The roof may have fixed supports attached directly to the tank, and the top of the tank shall be analyzed and designed to sustain the horizontal thrust transferred from the roof, including that from differential thermal expansion and contraction. For roofs with fixed supports on a new tank, the maximum acceptable radial tank deflections at the top of the tank shall be coordinated between the tank Manufacturer and roof manufacturer. For roofs with fixed supports on an existing tank, the maximum acceptable radial tank deflections at the top of the tank shall be coordinated between the Purchaser and roof manufacturer.

G.5.3 Separation of Carbon Steel and Aluminum

Unless another method is specified by the Purchaser, aluminum shall be isolated from carbon steel by an austenitic stainless steel spacer or an elastomeric isolator bearing pad.

G.5.4 Electrical Grounding

The aluminum dome roof shall be electrically interconnected with and bonded to the steel tank shell or rim. As a minimum, stainless steel cable conductors 3 mm ($^1/_8$ in.) in diameter shall be installed at every third support point. The choice of cable shall take into account strength, corrosion resistance, conductivity, joint reliability, flexibility, and service life.

G.6 Physical Characteristics

G.6.1 Sizes

An aluminum dome roof may be used on any size tank erected in accordance with this standard.

G.6.2 Dome Radius

The maximum dome radius shall be 1.2 times the diameter of the tank. The minimum dome radius shall be 0.7 times the diameter of the tank unless otherwise specified by the Purchaser.

G.7 Platforms, Walkways, and Handrails

Platforms, walkways, and handrails shall conform to 5.8.10 except that the maximum concentrated load on walkways or stairways supported by the roof structure shall be 4450 N (1000 lbf). When walkways are specified to go across the exterior of the roof (to the apex, for example), stairways shall be provided on portions of walkways whose slope is greater than 20 degrees. Walkways and stairways may be curved or straight segments.

G.8 Appurtenances

G.8.1 Roof Hatches

If roof hatches are required, each hatch shall be furnished with a curb 100 mm (4 in.) or higher and a positive latching device to hold the hatch in the open position. The minimum size of opening shall not be less than 600 mm (24 in.). The axis of the opening may be perpendicular to the slope of the roof, but the minimum clearance projected on a horizontal plane shall be 500 mm (20 in.).

G.8.2 Roof Nozzles and Gauge Hatches

Roof nozzles and gauge hatches shall be flanged at the base and bolted to the roof panels with an aluminum reinforcing plate on the underside of the panels. The axis of a nozzle or gauge hatch shall be vertical. If the nozzle is used for venting purposes, it shall not project below the underside of the roof panel. Aluminum or stainless steel flanges may be bolted directly to the roof panel, with the joint caulked with sealant. Steel flanges shall be separated from the aluminum panel by a gasket (see Figure G.2 for a typical nozzle detail).

G.8.3 Skylights

G.8.3.1 If skylights are specified by the Purchaser, each skylight shall be furnished with a curb 100 mm (4 in.) or higher and shall be designed for the live and wind loads specified in G.4.2.5. The Purchaser shall specify the total skylight area to be provided.

G.8.3.2 When skylights are specified for tanks without floating roofs or for floating roof tanks which are sealed and gas-blanketed (not provided with circulation venting per H.5.2.2.1 and H.5.2.2.2), the Purchaser shall consider skylight material compatibility with exposure to elevated concentrations of the stored product.

G.9 Sealing at the Shell

The roof need not be sealed to the tank shell unless specified by the Purchaser or required to contain internal pressure. The bottom of the flashing shall extend at least 50 mm (2 in.) below the top of the tank. Corrosion-resistant coarse-mesh screen (13 mm [$^1/_2$ in.] openings) shall be provided to prevent the entrance of birds. The net open area of peripheral screened venting (if provided) shall be considered to serve as an open vent/emergency pressure relief device and contribute to the emergency vent area in accordance with 5.8.5.3.

G.10 Testing

G.10.1 Leak Testing

G.10.1.1 After completion, the roof seams shall be leak tested by spraying the outside of the seams with water from a hose with a minimum static head pressure 350 kPa (50 lbf/in.^{2}) gauge at the nozzle. Because of possible corrosive

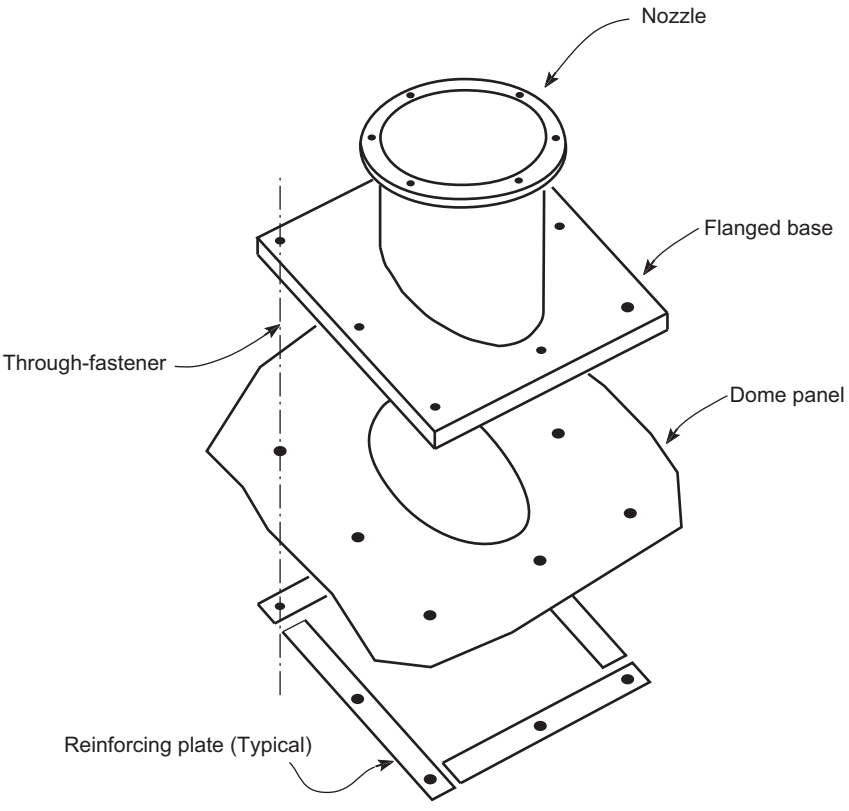

Figure G.2—Typical Roof Nozzle

effects, consideration shall be given to the quality of the water used and the duration of the test. Potable water shall be used unless otherwise specified. The water shall not be sprayed directly on roof vents. Any water on the inside of the roof shall constitute evidence of leakage.

- **G.10.1.2** Where gas-tight roofs are required, leak testing may be accomplished in accordance with F.4.4 or F.7.6 or by another means acceptable to the roof Manufacturer and the Purchaser.

G.10.1.3 Any leaks discovered during testing shall be sealed, and the roof shall be retested until all leaks are sealed.

G.11 Fabrication and Erection

G.11.1 General

The dome contractor shall perform the work described in this Annex using qualified supervisors who are skilled and experienced in the fabrication and erection of aluminum structures.

G.11.2 Fabrication

All roof parts shall be prefabricated for field assembly. Fabrication procedures shall be in accordance with Section 6 of the *Aluminum Design Manual*. All structural shapes used to make the roof shall be punched or drilled before any shop coating is applied.

G.11.3 Welding

The design and fabrication of welded aluminum parts shall be in accordance with the A*luminum Design Manual: Specifications for Aluminum Structures* and AWS D1.2. All aluminum structural welds and components joined by welding shall be visually examined by dye-penetrant method in accordance with Section 5, Part D, of AWS D1.2. All structural welding of aluminum shall be performed before the dome is erected in the field. A full set of satisfactory examination records shall be delivered to the owner before field erection.

G.11.4 Shipping and Handling

Materials shall be handled, shipped, and stored in a manner that does not damage the surface of aluminum or the surface coating of steel.

G.11.5 Erection

The erection supervisor shall be experienced in the construction of aluminum dome roofs and shall follow the Manufacturer's instructions and drawings furnished for that purpose.

G.11.6 Workmanship

To minimize internal stresses on the structure when fasteners are tightened, the roof shall be installed on supports that are in good horizontal alignment. The components of the structure shall be erected with precise fit and alignment. Field cutting and trimming, relocation of holes, or the application of force to the parts to achieve fit-up is not acceptable.

Annex H
(normative)

Internal Floating Roofs

H.1 Scope

- **H.1.1** This Annex provides minimum requirements that apply to a tank with an internal floating roof and a fixed roof at the top of the tank shell, and to the tank appurtenances. This Annex is intended to limit only those factors that affect the safety and durability of the installation and that are considered to be consistent with the quality and safety requirements of this standard. Types of internal floating roofs (listed under H.2) and materials (listed under H.3) are provided as a basic guide and shall not be considered to restrict the Purchaser option of employing other commonly accepted or alternative designs, as long as all design loading is documented to meet the minimum requirements herein, and all other criteria are met (except alternative materials and thicknesses as permitted by H.3.1). The requirements apply to the internal floating roof of a new tank and may be applied to an existing fixed-roof tank. Section 5.10 of this standard is applicable, except as modified in this Annex.

- **H.1.2** The Purchaser is required to provide all applicable jurisdictional requirements that apply to internal floating roofs (see 1.3).

- **H.1.3** See Annex W for bid requirements pertaining to internal floating roofs.

H.2 Types of Internal Floating Roofs

H.2.1 The internal floating roof type shall be selected by the Purchaser after consideration of both proposed and future product service, operating conditions, maintenance requirements, regulatory compliance, service life expectancy, ambient temperature, maximum design temperature, product vapor pressure, corrosion conditions and other compatibility factors. Other operating conditions requiring consideration include (but are not limited to) anticipated pumping rates, roof landing cycles, and the potential for turbulence resulting from upsets, such as vapor slugs injected into the tank. Safety and risk factors associated with the roof types shall also be evaluated.[26] The type of roof, which shall be designated by the Purchaser on the Data Sheet, Line 30, shall be one of the types described in H.2.2.

H.2.2 The following types of internal floating roofs are described in this Annex.

a) Metallic pan internal floating roofs [27,28,29] have a peripheral rim above the liquid for buoyancy. These roofs are in full contact with the liquid surface and are typically constructed of steel.

b) Metallic open-top bulk-headed internal floating roofs [26,27] have peripheral open-top bulk-headed compartments for buoyancy. Distributed open-top bulk-headed compartments shall be used as required. These roofs are in full contact with the liquid surface and are typically constructed of steel.

---

[26] Internal floating roof tanks generally have reduced fire risk, and the use of fixed fire suppression systems is often not mandatory. Various internal floating roof materials will have unique flammability characteristics, melting points and weights (perhaps with reduced buoyancy being required). If fire suppression systems are used, certain roof types need to be evaluated for full surface protection. NFPA 11 *Standard for Low-Expansion Foam* can provide guidance for this evaluation.

[27] The Purchaser is cautioned that this design does not have multiple flotation compartments necessary to meet the requirements of H.4.2.1.3.

[28] These designs contain no closed buoyancy compartments, and are subject to flooding during sloshing or during application of fire-fighting foam/water solution. Also, without bracing of the rim being provided by the pontoon top plate, design to resist buckling of the rim must be evaluated.

[29] If the floating roof is a) a metallic pan roof with or without bulkheads, or b) a non-metallic roof with or without closed buoyancy compartments, then the tank is considered a fixed-roof tank (i.e., having no internal floating roof) for the requirements of NFPA 30. See NFPA 30 for spacing restrictions on floating roof tanks.

c) Metallic pontoon internal floating roofs have peripheral closed-top bulk-headed compartments for buoyancy. Distributed closed-top bulk-headed compartments shall be used as required. These roofs are in full contact with the liquid surface and are typically constructed of steel.

d) Metallic double-deck internal floating roofs have continuous closed top and bottom decks, which contain bulk-headed compartments for buoyancy. These roofs are in full contact with the liquid surface and are typically constructed of steel.

e) Metallic internal floating roofs on floats have their deck above the liquid, supported by closed pontoon compartments for buoyancy. These roof decks are not in full contact with the liquid surface and are typically constructed of aluminum alloys or stainless steel.

f) Metallic sandwich-panel/composite internal floating roofs have metallic or composite material panel modules for buoyancy compartments. Panel modules may include a honeycomb or closed cell foam core; however, cell walls within the panel module are not considered "compartments" for purposes of inspection and design buoyancy requirements (see H.4.1.7 and H.4.2.1).[30] These roofs are in full contact with the liquid surface and are typically constructed of aluminum alloys or Purchaser approved composite materials.[27]

g) Hybrid internal floating roofs shall, upon agreement between the Purchaser and the Manufacturer, be a design combination of roof types described in H.2.2.b and H.2.2.c, having bulkhead compartments with closed-top perimeter pontoon and open-top center compartments for buoyancy. These roofs are in full contact with the liquid surface and are typically constructed of steel.

h) Other roof materials or designs if specified and described in detail by the Purchaser on the Data Sheet.

H.3 Material

H.3.1 Selection

Internal floating roof materials shall be selected by the Purchaser after consideration of items listed under H.2.1. The Manufacturer shall submit a complete material specification in his proposal. The choice of materials should be governed by compatibility with the specified liquid. Material produced to specifications other than those listed in this Annex (alternative materials) may be used. Material shall be certified to meet all the requirements of a material specification listed in this Annex, and approved by the Purchaser or shall comply with requirements as specified by the Purchaser. When specified by the Purchaser, a corrosion allowance shall be added to the minimum nominal thickness indicated below. The "nominal thickness" is the purchased thickness with allowance for the permissible mill tolerance.

H.3.2 Steel

Steel shall conform to the requirements of Section 4 of this standard. Steel in contact with vapor or liquid shall be 4.8 mm ($^3/_{16}$ in.) minimum nominal thickness. Other steel shall be 2.5 mm (0.094 in.) minimum nominal thickness.

H.3.3 Aluminum

Aluminum shall conform to the requirements of Annex AL. Aluminum skin shall be 0.50 mm (0.020 in.) minimum nominal thickness. Aluminum floats shall be 1.2 mm (0.050 in.) minimum nominal thickness. For a sandwich panel flotation unit, core material shall be at least 25 mm (1.0 in.) thick, and metallic skin (except carbon steel) shall be 0.41 mm (0.016 in.) minimum nominal thickness.

[30] A single inspection opening per panel module is permitted, regardless of core material; however, core materials producing enclosed spaces within a module may result in undetectable combustible gas in areas isolated from the inspection opening. Design buoyancy shall be based on the loss of any two full panel modules (not cells within modules).

H.3.4 Stainless Steel

Stainless steel shall conform to the requirements of ASTM A240/A240M (austenitic type only). Stainless steel skin shall be 0.46 mm (0.018 in.) minimum nominal thickness. Stainless steel floats shall be 1.2 mm (0.048 in.) minimum nominal thickness.

H.4 Requirements for All Types

H.4.1 General

H.4.1.1 An internal floating roof and its accessories shall be designed and constructed to allow the roof to operate throughout its normal travel without manual attention and without damage to any part of the fixed roof, the internal floating roof, internal floating roof seals (except for normal wear), the tank, or their appurtenances. The internal floating roof and seals shall be designed to operate in a tank constructed within the dimensional limits defined in 7.5 of this standard.

H.4.1.2 The internal floating roof shall be designed and built to float and rest in a uniform horizontal plane (no drainage slope required).

H.4.1.3 All seams in the internal floating roof that are exposed to product vapor or liquid shall be vapor-tight in accordance with H.4.3.1.

H.4.1.4 A vapor-tight rim (or skirt), extending at least 150 mm (6 in.) above the liquid at the design flotation level, shall be provided around both the internal floating roof periphery and around all internal floating roof penetrations (columns, ladders, stilling wells, manways, open deck drains and other roof openings) except for drains designed to avoid product backflow onto the roof.

H.4.1.5 The non-contact type (see H.2.2e) internal floating roof shall have a vapor-tight rim (or skirt), extending at least 100 mm (4 in.) into the liquid at the design flotation level, around both the internal floating roof periphery and around all internal floating roof penetrations (columns, ladders, stilling wells, manways, open deck drains and other roof openings), with the exception of penetrations for pressure-vacuum (bleeder) vents (per H.5.2.1).

- **H.4.1.6** All conductive parts of the internal floating roof shall be electrically interconnected and bonded to the outer tank structure. This shall be accomplished by electric bonding shunts in the seal area (a minimum of four, uniformly distributed) or flexible multi-strand cables from the external tank roof to the internal floating roof (a minimum of two, uniformly distributed). The choice of bonding devices shall be specified by the Purchaser on the Data Sheet, Line 32, considering strength, corrosion resistance, joint reliability, flexibility, and service life. All movable cover accessories (hatches, manholes, pressure relief devices, and other openings) on the internal floating roof shall be electrically bonded to the internal floating roof to prevent static electricity sparking when they are opened.

- **H.4.1.7** Each closed flotation compartment shall be capable of being field-inspected for the presence of combustible gas. Inspection openings shall be located above the liquid level and closed compartments shall be capable of being resealed in the field after periodic inspection (to prevent liquid or vapor entry). Closed-top compartments (types H.2.2c, d, and g) shall be accessible from the top of the internal floating roof and provided with a secured and gasketed manhole for visual internal inspection and the manhole cover shall be provided with a suitable vent. The top edge of the manhole shall extend a minimum of 25 mm (1 in.) above the top of the pontoon rim/skirt. With agreement by the Purchaser, type H.2.2c, d, and g floating roofs 6 m (20 ft) in diameter or less may be provided with an inspection port in place of a manhole. The inspection ports must meet the sealing, securing and extension requirements listed here for manholes in internal floating roof closed compartments.

- **H.4.1.8** All closed flotation compartments shall be seal welded to prevent liquid or vapor entry, unless otherwise specified by the Purchaser. For pontoon, double-deck and hybrid internal floating roofs (types H.2.2c, d, and g), each bulkhead in a closed flotation compartment shall also be provided with a continuous seal weld all around so that the bulkhead is liquid and vapor-tight.

- **H.4.1.9** For metallic/composite sandwich-panel roofs (type H.2.2f), if the use of adhesives is allowed by the Purchaser (per H.4.3.4) to seal the flotation panels (in lieu of welding), all exposed adhesives shall be compatible with the product service and flotation test water (Purchaser shall consider future product service, the hydrostatic test condition, and design condition changes to specify adhesive compatibility.)

- **H.4.1.10** When specified by the Purchaser for deck surfaces above the liquid level, deck drains shall be provided to return any spillage or condensate to the product. Such drains shall close automatically or extend at least 100 mm (4 in.) into the product to minimize vapor loss.

H.4.1.11 Internal floating roofs classified as full-contact types (see H.2.2) shall be designed to minimize trapped vapor space beneath the internal floating roof.

H.4.2 Internal Floating Roof Design

H.4.2.1 Buoyancy Requirements

- **H.4.2.1.1** All internal floating roof design calculations shall be based on the lower of the product specific gravity or 0.7 (to allow for operation in a range of hydrocarbon service), regardless of any higher specific gravity that might be specified by the Purchaser.

H.4.2.1.2 All internal floating roofs shall include buoyancy required to support at least twice its dead weight (including the weight of the flotation compartments, seal and all other floating roof and attached components), plus additional buoyancy to offset the calculated friction exerted by peripheral and penetration seals during filling.

- **H.4.2.1.3** All internal floating roofs with multiple flotation compartments shall be capable of floating without additional damage after any two compartments are punctured and flooded. Designs which employ an open center deck in contact with the liquid (types H.2.2b, c, and g) shall be capable of floating without additional damage after any two compartments and the center deck are punctured and flooded. With agreement by the Purchaser, any floating roof 6 m (20 ft) in diameter or less with multiple flotation compartments may be designed to be capable of floating without additional damage after any one compartment is punctured and flooded.

H.4.2.1.4 The internal floating roof shall be designed to meet the requirements of H.4.2.1.3 and to safely support at least two men walking anywhere on the roof while it is floating without damaging the floating roof and without allowing product on the roof. One applied load of 2.2 kN (500 lbf) over 0.1 m^2 (1 ft^2) applied anywhere on the roof addresses two men walking. With agreement by the Purchaser, the concentrated load design criteria may be modified for roofs less than 9 m (30 ft) diameter (where internal floating roofs may become unstable), to account for access needs, and expected concentrated live loads.

H.4.2.2 Internal Floating Roof Support Design Loads

H.4.2.2.1 Internal floating roof supports and deck structural attachments (such as reinforcing pads and pontoon end gussets) shall be designed to support the load combinations listed in H.4.2.2.2 without exceeding allowable stresses. Consideration shall also be made for non-uniform support settlement or other non-uniform load distribution, based on anticipated conditions specified by the Purchaser. Application of non-uniform loads is by agreement between the Purchaser and Manufacturer.

- **H.4.2.2.2** Load Combination for Floating Roof Supports.

Floating roof support loading (legs or cables) shall be as follows:

$$D_{f+} \text{ (the greater of) } P_{fe} \text{ or } L_{f1} \text{ or } L_{f2}$$

where

D_f is the dead load of internal floating roof, including the weight of the flotation compartments, seal and all other floating roof and attached components;

L_{f1} is the internal floating roof uniform live load (0.6 kPa [12.5 lbf/ft^2] if not automatic drains are provided, 0.24 kPa [5 lbf/ft^2] if automatic drains are provided);

L_{f2} is the internal floating roof point load of at least two men walking anywhere on the roof. One applied load of 2.2 kN [500 lbf] over 0.1 m^2 [1 ft^2] applied anywhere on the roof addresses two men walking;

P_{fe} is the internal floating roof design external pressure (0.24 kPa [5 lbf/ft^2] minimum).

NOTE With agreement by the Purchaser, L_{f2} may be modified for roofs less than 9 m (30 ft) diameter (where internal floating roofs may be come unstable), to account for access needs, and expected concentrated live loads.

H.4.2.2.3 The allowable load on support cables shall be determined using a factor of safety of 5 on the ultimate strength of cables and their connections. Cables and their connections shall be designed for the load combination listed in H.4.2.2.2.

H.4.2.3 Other Design Requirements

H.4.2.3.1 Aluminum load carrying members, assemblies and connections shall comply with the design requirements of the latest edition of the *Aluminum Design Manual*.

- **H.4.2.3.2** Steel structural components shall be proportioned so that the maximum stresses shall not exceed the limitations specified in the latest edition of the *Manual of Steel Construction, Allowable Stress Design*, as published by the American Institute of Steel Construction (Chicago, IL). For other steel components, the allowable stress and stability requirements shall be jointly established by the Purchaser and the Manufacturer, as part of the inquiry. Alternatively, a proof test (simulating the conditions of H.4.2) may be performed on the roof or on one of similar design.

H.4.3 Joint Design

H.4.3.1 All seams in the floating roof exposed directly to product vapor or liquid shall be welded, bolted, screwed, riveted, clamped, or sealed and checked for vapor-tightness per H.6.2.

H.4.3.2 Welded joints between stainless steel members and welded joints between carbon steel members shall conform to 5.1 of this standard. Welded joints between aluminum members shall conform to AL.5.1.

H.4.3.2.1 Single-welded butt joints without backing are acceptable for flotation units where one side is inaccessible.

H.4.3.2.2 The thickness of fillet welds on material less than 4.8 mm ($^3/_{16}$ in.) thick shall not be less than that of the thinner member of the joint.

- **H.4.3.3** Bolted, threaded, and riveted joints are acceptable when mutually agreed upon by the Purchaser and the Manufacturer.

- **H.4.3.3.1** Only austenitic type stainless steel hardware shall be used to join aluminum and/or stainless steel components to each other or to carbon steel. Where acceptable to the Purchaser and the Manufacturer, aluminum hardware may be used to join aluminum components. Aluminum shall be isolated from carbon steel by an austenitic stainless steel spacer, an elastomeric pad, or equivalent protection. The use of plated fasteners shall be permitted only when connecting steel components, if specified by the Purchaser.

- **H.4.3.4** Use of any joint sealing compound, insulating material, polymer, elastomer, or adhesive must be pre-approved by the Purchaser. The joining procedure along with test results demonstrating the properties required by this paragraph shall be described completely. Where such joints are permitted, any joint sealing compound, insulating material, elastomeric or adhesive shall be compatible with the product stored; specified service conditions; and with materials joined. Resulting joints shall be equivalent in serviceability (with the basic floating roof components), of a size and strength that will accept the roof design loads without failure or leakage, and shall have an expected life equal to the service life of the roof. Any non-metallic component shall be selected and fabricated to preclude absorption (under design conditions specified and permitted by this standard) of hydrocarbons, hydro-test water and specified product to be stored.

- **H.4.3.5** If specified by the Purchaser, all steel plate seams exposed to the product liquid or vapor shall be seal welded (for corrosive service conditions).

H.4.4 Peripheral Seals

- In addition to the required floating roof primary peripheral seal, secondary–peripheral seals shall be provided if specified on the Data Sheet, Line 31. Floating roof primary and secondary peripheral seal types and configurations shall be provided as specified on the Data Sheet, Line 31.

H.4.4.1 A peripheral seal (also referred to as “rim seal”) that spans the annular space between the internal floating roof deck and the shell shall be provided. When an internal floating roof has two such devices, one mounted above the other, the lower is the primary peripheral seal and the upper is the secondary peripheral seal. When there is only one such device, it is a primary peripheral seal, regardless of its mounting position.

- **H.4.4.2** The peripheral seal type and material shall be selected by the Purchaser after consideration of both proposed and future product service, tank shell construction/condition, maintenance requirements, regulatory compliance, service life expectancy, ambient temperature, design metal temperature, maximum design temperature, permeability, abrasion resistance, discoloration, aging, embrittlement, flammability, and other compatibility factors. The various seal types (listed H.4.4.4) will have variable life expectancy and service limitations.

The following non-mandatory table provides guidance on frequently used materials for selected products. Each material must be evaluated for the specific product and temperature.

Fluid Stored	Seal Material
Crude oil	Fluoropolymers, urethane, nitrile
Refined products	Fluoropolymers, urethane, urethane laminate, fluoroelastomers, or Buna-N-Vinyl
Gasoline/MTBE blend	Fluoropolymers or nitrile

H.4.4.3 All peripheral seals and their attachment to the floating roof shall be designed to accommodate ±100 mm (±4 in.) of local deviation between the floating roof and the shell.

H.4.4.4 Types of Primary Seals

a) **Liquid-mounted rim seal:** Means a resilient foam-filled or liquid-filled primary rim seal mounted in a position resulting in the bottom of the seal being normally in contact with the stored liquid surface. This seal may be a flexible foam (such as polyurethane foam in accordance with ASTM D3453) or liquid contained in a coated fabric envelope. Circumferential joints on liquid-mounted peripheral seals shall be liquid-tight and shall overlap at least 75 mm (3 in.). The material and thickness of the envelope fabric shall be determined after the factors given in H.4.4.2 are considered.

b) **Vapor-mounted rim seal**: Means a peripheral seal positioned such that it does not normally contact the surface of the stored liquid. Vapor-mounted peripheral seals may include, but are not limited to, resilient-filled seals (similar in design to liquid-mounted rim seals per H.4.4.4a), and flexible-wiper seals. Flexible-wiper seal means a rim seal utilizing a blade or tip of a flexible material (such as extruded rubber or synthetic rubber) with or without a reinforcing cloth or mesh.

c) **Mechanical shoe (metallic shoe)**: Means a peripheral seal that utilizes a light-gauge metallic band as the sliding contact with the shell and a fabric seal to close the annular space between the metallic band and the rim of the floating roof deck. The band is typically formed as a series of sheets (shoes) that are overlapped or joined together to form a ring and held against the shell by a series of mechanical devices.

Galvanized shoes shall conform to ASTM A924 and shall have a minimum nominal thickness of 1.5 mm (16 gauge) and a G90 coating. Stainless steel shoes shall conform to H.3.3, and shall have a minimum nominal thickness of 1.2 mm (18 gauge). For internal floating roofs the primary shoes shall extend at least 150 mm (6 in.) above and at least 100 mm (4 in.) into the liquid at the design flotation level. If necessary, bottom shell course accessories (e.g. side mixers) and other assemblies shall be modified or relocated to eliminate interference between lower portions of metallic seal assemblies.

- Unless specified otherwise by the Purchaser, the seal shoe and compression mechanism shall be installed before hydrostatic testing. It may be necessary to remove the seal shoe after the hydro-test to accommodate cleaning, application of interior linings, or any situation where the installed shoe might interfere with the process. The fabric seal may be installed after the hydrostatic testing.

H.4.4.5 The specific requirements for all floating roof peripheral seals are listed below.

1) All fasteners and washers for installation of seal joints, including fabric seal joints, shall be austenitic stainless steel. (See restrictions on contact between galvanizing and stainless steel in S.2.1.3.)

2) The seals shall be designed for a temperature range extending from design metal temperature less 8 °C (15 °F) to the maximum operating temperature.

3) Lengths of seal sections shall be as long as practical. No holes or openings shall be permitted in the completed seal. The seal material may be fabricated in sections resulting in seams, but any such seam shall be joined or otherwise held tightly together along the entire seam. For peripheral seals that use a fabric material to affect the seal, the requirement in the preceding sentence applies only to the fabric and not to any support devises. An adequate but minimum number of expansion joints shall be provided.

4) Provisions shall be made to prevent damage to the seal due to any overflow openings in the shell.

5) Rough spots on the shell that could damage the seal assembly shall be ground smooth. See H.6.1.

6) All metallic components shall be electrically bonded. See H.4.1.6 or C.3.1.6 for electrical bonding requirements.

H.4.4.6 If wax scrapers are specified on the Data Sheet, Line 31, they shall be located such that the scraping action occurs below the liquid surface. Design of wax scrapers shall not interfere with bottom shell course accessories.

H.4.5 Roof Penetrations

Columns, ladders, and other rigid vertical appurtenances that penetrate the deck shall be provided with a seal that will permit a local deviation of ±125 mm (±5 in.). Appurtenances shall be plumb within a tolerance of ±75 mm (±3 in.).

H.4.6 Roof Supports

- **H.4.6.1** The floating roof shall be provided with adjustable supports, unless the Purchaser specifies fixed supports.

H.4.6.2 Unless specified otherwise, the height of the floating roof shall be adjustable to two positions with the tank in service. The design of the supports shall prevent damage to the fixed roof and floating roof when the tank is in an overflow condition.

H.4.6.3 The Purchaser shall specify clearance requirements to establish the low (operating) and high (maintenance) levels of the roof supports. The low roof position shall be the lowest permitted by the internal components of the tank including shell nozzles with internal projections. If specified, a single position support height shall be based on the Purchaser-specified clearance dimension. The Purchaser shall provide data to enable the Manufacturer to ensure that all tank appurtenances (such as mixers, interior piping, and fill nozzles) are cleared by the roof in its lowest position. In addition to fitting elevations, such data shall include minimum mixer operation level and low level alarm settings (if applicable). If not specified otherwise by the Purchaser, the following apply:

H.4.6.3.1 The high roof position shall provide a 2-m (78-in.) minimum clearance throughout the bottom, between the roof and the tank bottom.

H.4.6.3.2 Where propeller-type mixers are used, the support legs shall provide a minimum clearance of 75 mm (3 in.) from the underside of the internal floating roof (or roof notch) to the tip of the mixer propeller.

H.4.6.4 Support attachments in the deck area shall be designed to prevent failure at the point of attachment. On the bottom of the steel welded deck plates (used on types H.2.2a, b, c, d, and g), where flexure is anticipated adjacent to supports or other relatively rigid members, full-fillet welds not less than 50 mm (2 in.) long on 250 mm (10 in.) centers shall be used on any plate laps that occur within 300 mm (12 in.) of any such support or member.

H.4.6.5 Supports shall be fabricated from pipe, unless cable or another type is specified on the Data Sheet, Line 34 and approved by the Purchaser. Supports fabricated from pipe shall be notched or otherwise constructed at the bottom to provide complete liquid drainage. Cable supports shall be adjustable externally and shall not have an open penetration at the floating roof surface. Fixed roofs shall be designed or verified suitable for cable support loads, when used, per agreement between the Purchaser and tank/roof Manufacturers.

H.4.6.6 Steel pads or other means shall be used to distribute the loads on the bottom of the tank and provide a wear surface. With the Purchaser's approval, pads may be omitted if the tank bottom will support the live load plus the dead load of the floating roof. If pads are used, they shall be continuously welded to the tank bottom.

H.4.6.7 Aluminum supports shall be isolated from carbon steel by an austenitic stainless steel spacer, an elastomeric bearing pad, or equivalent protection, unless specified otherwise by the Purchaser.

H.4.6.8 Special protective measures (corrosion allowance, material selection, linings) are to be evaluated for supports that interface with stratified product bottoms, which may include corrosive contaminant combinations not found in the normal product. The Purchaser shall specify if any protective measures are required.

H.4.6.9 For tanks with internal linings, the Purchaser shall specify on Line 23 of the Data Sheet any special requirements for minimizing corrosion where the leg contacts the tank bottom, such as a flat plate or bull nose on the leg base, a thicker base plate, or other means.

H.4.6.10 Consideration shall be given to the use of fixed supports for the operating position (low level) of internal floating roofs, which utilize cable supports suspended from a fixed roof. These supports are typically not adjustable, are sealed to prevent emissions, and are for the operating position (low level) set at a level as specified by the Purchaser. The use of fixed supports for the low level positions are intended to reduce the frequency of fixed roof loading. The operating position (low level) and length of the cables shall be such that sinking and/or collapse of the internal floating roof will not apply loads to the support cables.

H.4.6.11 If cable supports are used, the supports shall be adjustable from the fixed roof while the floating roof is floating and with the cables unloaded.

H.4.6.12 Cables, cable segments, or cable connections which support the floating roof are prohibited from using a fusible link or other devices which are designed to fail at a specified load limit.

H.4.6.13 Cables used to support internal floating roofs shall be 300 series stainless steel and shall be flexible to facilitate repeatable lay down patterns on the floating roof as it travels up and down within the tank. Lay down patterns shall be positioned to avoid rim seals and floating roof appurtenances that could prevent the cable from freely extending as the floating roof lowers.

H.5 Openings and Appurtenances

H.5.1 Ladder

- **H.5.1.1** The tank interior is considered a confined space environment with restricted access (see API Recommended Practice 2026). If specified by the Purchaser, the tank shall be supplied with a ladder for internal floating roof deck access. If a ladder is not supplied and the floating roof is not steel, a ladder landing pad shall be provided on the floating roof.

H.5.1.2 The ladder shall be designed to allow for the full travel of the internal floating roof, regardless of any settling of the roof supports.

H.5.1.3 The ladder shall be installed within a fixed-roof manhole, per H.5.5.1.

- **H.5.1.4** If a level-gauge stilling well is provided, the well may form one or both legs of the ladder, as specified by the Purchaser.

H.5.1.5 The ladder shall not be attached to the tank bottom unless provision is made for vertical movement at the upper connection.

H.5.2 Vents

- **H.5.2.1 Internal Floating Roof Pressure-Relieving Vents**

H.5.2.1.1 Vents suitable to prevent overstressing of the roof deck or seal membrane shall be provided on the floating roof. These vents shall be adequate to evacuate air and gases from underneath the roof such that the internal floating roof is not lifted from resting on its supports during filling operations, until floating on the stored liquid. The vents shall also be adequate to release any vacuum generated underneath the roof after it settles on its supports during emptying operations to limit the floating roof external pressure to P_{fe}. The Purchaser shall specify filling and emptying rates. The manufacturer shall size the vents.

H.5.2.1.2 Internal floating roofs which utilize support legs shall be equipped with leg- or pressure-vacuum-activated vents. The Purchaser may specify the type of vent and the associated design conditions (see Line 33 of the Data Sheet). Leg activated vents shall be adjustable as required per H.4.6.

H.5.2.1.3 Internal floating roofs, which utilize cable supports and mechanical activated vents shall have a leg or cable activated vent(s) for the operating position (low level) and a cable activated vent(s) for the maintenance position (high level). Alternatively, internal floating roofs which utilize cable supports shall use a pressure vacuum vent(s) to provide the required venting for all floating roof support levels.

H.5.2.1.4 Leg or cable activated vents shall be designed to open automatically when the roof lowers to 150 mm (6 in.) above its lowest operating position and to close automatically when the roof raises more than 150 mm (6 in.) above its lowest position. Float-activated vents shall be designed to remain closed while the roof is floating. Pressure-vacuum activated vents shall be designed to open and achieve required flow rates within the design capacities of the floating roof and floating roof support system as described in H.5.2.1.1.

H.5.2.2 Tank Circulation Vents

- **H.5.2.2.1** Peripheral circulation vents shall be located on the tank roof (unless otherwise specified by the Purchaser) and meet the requirements of H.5.3.3, so that they are above the seal of the internal floating roof when the tank is full. The maximum spacing between vents shall be 10 m (32 ft), based on an arc measured at the tank shell, but there shall not be fewer than four equally-spaced vents. The venting shall be distributed such that the sum of the open areas of the vents located within any 10 m (32 ft) interval is at least 0.2 m^2 (2.0 ft^2). The total net open area of these vents shall be greater than or equal to 0.06 m^2/m (0.2 ft^2/ft) of tank diameter. These vents shall be covered with a corrosion-resistant coarse-mesh screen (13 mm [$^1/_2$ in.] openings, unless specified otherwise by the Purchaser) and shall be provided with weather shields (the closed area of the screen must be deducted to determine the net open vent area).

  H.5.2.2.2 A center circulation vent with a minimum net open area of 30,000 mm^2 (50 $in.^2$) shall be provided at the center of the fixed roof or at the highest elevation possible on the fixed roof. It shall have a weather cover and shall be provided with a corrosion-resistant coarse-mesh screen (the closed area of the screen must be deducted to determine the net open vent area).

- **H.5.2.2.3** If circulation vents (per H.5.2.2.1 and H.5.2.2.2) are not installed, gas blanketing or another acceptable method to prevent the development of a combustible gas mixture within the tank is required. Additionally, the tank shall be protected by pressure-vacuum vents in accordance with 5.8.5, based on information provided by the Purchaser.

H.5.3 Liquid-Level Indication, Overfill Protection, and Overflow Slots

- **H.5.3.1** The Purchaser shall provide appropriate alarm devices to indicate a rise of the liquid in the tank to a level above the normal and overfill protection levels (see NFPA 30 and API 2350). Overflow slots shall not be used as a primary means of detecting an overfill incident.

- **H.5.3.2** The internal floating roof Manufacturer shall provide information defining the internal floating roof and seal dimensional profile for the Purchasers' determination of the maximum normal operating and overfill protection liquid levels (considering tank fixed-roof support, overflow slots or any other top of shell obstructions). The floating roof Manufacturer shall provide the design flotation level (liquid surface elevation) of the internal floating roof at which the pressure/vacuum relief vents will begin to open (to facilitate the Purchasers' determination of minimum operating levels).

- **H.5.3.3** The use of emergency overflow slots shall only be permitted if specified by the Purchaser. When emergency overflow slots are used, they shall be sized to discharge at the pump-in rates for the tank. The greater of the product specific gravity or 1.0 shall be used to determine the overflow slot position so that accidental overfilling will not damage the tank or roof or interrupt the continuous operation of the floating roof. Overflow discharge rates shall be determined by using the net open area (less screen) and using a product level (for determining head pressure) not exceeding the top of the overflow opening. The overflow slots shall be covered with a corrosion-resistant coarse-mesh screen (13 mm [$^1/_2$ in.] openings) and shall be provided with weather shields (the closed area of the screen must be deducted to determine the net open area). The open area of emergency overflow slots may contribute to the peripheral venting requirement of H.5.2.2.1 provided that at least 50 % of the circulation-vent area remains unobstructed during emergency overflow conditions. The floating-roof seal shall not interfere with the operation of the emergency overflow openings. Overflow slots shall not be placed over the stairway or nozzles unless restricted by tank diameter/height or unless overflow piping, collection headers, or troughs are specified by the Purchaser to divert flow.

H.5.4 Anti-rotation and Centering Devices

The internal floating roof shall be centered and restrained from rotating. A guide pole with rollers, two or more seal centering cables or other suitable device(s) shall be provided as required for this purpose. The internal floating roof shall not depend solely on the peripheral seals or vertical penetration wells to maintain the centered position or to resist rotation. Any device used for either purpose shall not interfere with the ability of the internal floating roof to travel within the full operating elevations in accordance with H.4.1.1.

H.5.5 Manholes and Inspection Hatches

H.5.5.1 Fixed-Roof Manholes

At least one fixed-roof manhole complying with this standard, with a nominal opening of 600 mm (24 in.) or larger, shall be provided in the fixed roof for maintenance ventilation purposes. If used for access to the tank interior, the minimum clear opening shall be 750 mm (30 in.).

H.5.5.2 Floating-Roof Manholes

At least one internal floating roof deck manhole shall be provided for access to and ventilation of the tank when the floating roof is on its supports and the tank is empty. The manhole shall have a nominal opening of 600 mm (24 in.) or larger and shall be provided with a bolted or secured and gasketed manhole cover. The manhole neck dimensions shall meet the requirements of H.4.1.4 and H.4.1.5.

• H.5.5.3 Inspection Hatches

When specified by the Purchaser, inspection hatches shall be located on the fixed roof to permit visual inspection of the seal region. The maximum spacing between inspection hatches shall be 23 m (75 ft), but there shall not be fewer than four equally-spaced hatches. Designs that combine inspection hatches with tank-shell circulation vents (located on the tank roof) are acceptable.

• H.5.6 Inlet Diffuser

Supply inlet diffusers if required on the Data Sheet (also see 5.8.11.2).

• H.5.7 Gauging and Sampling Devices

When specified by the Purchaser, the fixed roof and the internal floating roof shall be provided with and/or accommodate gauging and sampling devices. Sampling devices on the deck of the floating roof shall be installed beneath the fixed-roof hatch (as specified for this purpose) and, unless designed as a gauge pole (extending up to the fixed roof), shall have a funneled (tapered) cover to facilitate use from the roof of the tank. All such devices on the floating roof shall be installed within the plumbness tolerance of H.4.5. See C.3.14 for additional requirements applicable to gauge wells and poles.

• H.5.8 Corrosion Gauge

When specified by the Purchaser, a corrosion gauge for the internal floating roof shall be provided adjacent to the ladder to indicate the general corrosion rate.

• H.5.9 Foam Dams

A foam dam, if specified on the Data Sheet, Line 32, shall be fabricated and installed in compliance with NFPA 11.

H.6 Fabrication, Erection, Welding, Inspection, and Testing

• **H.6.1** The applicable fabrication, erection, welding, inspection, and testing requirements of this standard shall be met. Upon the start of internal floating roof installation, or concurrent with assembly within a tank under construction, the tank (interior shell and vertical components) shall be inspected by the floating roof erector, unless otherwise specified. The purpose of this inspection shall be to confirm plumbness of all interior components, along with roundness and the condition of the shell (for the presence of damage, projections, or obstructions) to verify that the floating roof and seals will operate properly. Any defects, projections, obstructions or tank tolerance limits (exceeding those defined in 7.5 of this standard), which would inhibit proper internal floating roof and seal operation, that are identified by the internal floating roof erector shall be reported to the Purchaser.

H.6.2 Deck seams and other joints that are required to be or vapor-tight per H.4.1.3 shall be tested for leaks by the shop or field joint assembler. Joint testing shall be performed by means of penetrating oil or another method consistent with those described in this standard for testing cone-roof and/or tank-bottom seams, or by any other method mutually agreed upon by the Purchaser and the roof Manufacturer.

H.6.3 The floating roof Manufacturer shall supply all floating roof closures required for testing per H.4.1.3, H.4.1.7, H.4.3.1, and H.6.2. Rivets, self-tapping screws, and removable sections are not acceptable for test plugs.

H.6.4 Any flotation compartment that is completely shop-fabricated or assembled in such a manner as to permit leak testing at the fabricating shop shall be leak tested at the shop as well as retested in the field by the floating roof erector for all accessible seams. In the field assembly yard or in the erected position, the erector shall spot leak test 10 % of the flotation compartments, whether shop- or field-fabricated. The Purchaser may select the specific compartments to test and the test location, based on his visual inspections for indications of damage or potential leaks (see the Data Sheet, Line 34). Any leaking compartments shall be repaired and re-tested by the roof Manufacturer. If the testing finds any leaks in compartments tested, except for those damaged by shipping, then 100 % of the roof compartments shall be leak tested. Unless prohibited by safety concerns, leak testing shall be at an internal pressure of 20 kPa to 55 kPa (3 lbf/in.^{2} to 8 lbf/in.^{2}) gauge using a soap solution or commercial leak detection solution.

NOTE Special contract terms may be required to cover the costs of the field testing.

H.6.5 Upon assembly and prior to a flotation test, the erector shall inspect to verify that the peripheral seal produces an acceptable fit against the tank shell.

H.6.6 Initial Flotation

A flotation test and initial fill inspection shall be conducted by the Purchaser. This test may be performed or witnessed by the erector, as subject to agreement with the Purchaser. The party performing the flotation test shall make water connections and supply all tank closures required for testing and remove all water connections and temporary closures (including gaskets, fasteners, test blanks, etc.) after completion of the test, unless otherwise specified by the Purchaser.

H.6.6.1 Internal floating roofs in accordance with types H.2.2a, b, c, d, and g shall be given a flotation test on water. Internal floating roofs in accordance with types H.2.2e and H.2.2f shall be given a flotation test on water or product at the option of the Purchaser. During this test, the roof and all accessible compartments shall be checked to confirm that they are free from leaks. The appearance of a damp spot on the upper side of the part in contact with the liquid shall be considered evidence of leakage.

H.6.6.2 During initial fill the internal floating roof should be checked to confirm that it travels freely to its full height. The peripheral seal shall be checked for proper operation throughout the entire travel of the internal floating roof. During the first event of lowering the level from full height, particular attention shall be given for tanks that contain a floating suction to ensure proper operation.

H.6.6.3 Because of possible corrosive effects, consideration shall be given to the quality of water used and the duration of the test. Potable water is recommended. For aluminum or stainless steel floating roofs, S.4.10 shall be followed.

H.6.6.4 The high flotation level shall be evaluated for clearance and the floating suction (if existing) shall be compensated for the excess buoyancy that will be encountered during hydrostatic testing of the floating roof system.

Annex I
(normative)

Undertank Leak Detection and Subgrade Protection

This annex provides a number of design options requiring decisions by the Purchaser; standard requirements; recommendations; and information that supplements the basic standard. This annex becomes a requirement only when the Purchaser specifies an option covered by this annex or specifies the entire annex.

I.1 Scope and Background

I.1.1 This Annex provides acceptable construction details for the detection of product leaks through the bottoms of aboveground storage tanks, and provides guidelines for tanks supported by grillage.

NOTE API supports a general position of installation of a Release Prevention Barrier (RPB) under new tanks during initial construction. An RPB includes steel bottoms, synthetic materials, clay liners, and all other barriers or combination of barriers placed in the bottom of or under an aboveground storage tank, which have the following functions: (a) preventing the escape of contaminated material, and (b) containing or channeling released material for leak detection.

- **I.1.2** Several acceptable construction details are provided for detection of leaks through the tank bottom and details for tanks supported by grillage (see Figures I.1 through I.11). Alternative details or methods may be used if agreed upon by the tank owner and Manufacturer, provided the details or methods satisfy the requirements of I.2.

- **I.1.3** The tank owner shall determine whether the undertank area is to be constructed for leak detection. If leak detection is required, the owner shall specify the method or methods to be employed.

I.1.4 The bottoms of aboveground storage tanks may leak as a result of product side corrosion, soil side corrosion, or a combination of both. The extent of product side corrosion can be detected using standard inspection techniques during an internal inspection, but determining the nature and extent of soil side corrosion is more difficult. Therefore, in certain services and tank locations, it may be desirable to provide for undertank monitoring of leakage through the tank bottom plates.

I.1.5 For additional information on the use of internal linings to prevent internal bottom corrosion, see API 652. Similarly, see API 651 for guidelines and requirements relating to preventing corrosion from the soil side of the bottom plate.

I.1.6 When the appropriate tank foundation design is being selected, it is important to consider the environmental and safety regulatory implications of leakage of tank contents into the containment space below the tank bottom. Specifically, the contamination of permeable material such as sand used as a floor support may constitute the generation of a hazardous waste. The treatment or disposal costs of such contaminated material must be determined.

I.1.7 The requirements for secondary containment as it relates to diked areas and impoundments are not within the scope of this Annex.

I.2 Performance Requirements

The following general requirements shall be satisfied for all leak detection systems:

a) Leaks through the tank bottom shall be detectable by observation at the tank perimeter. If a leak is detected, it shall be collected.

b) The use of electronic sensors for the detection of vapors and liquids is acceptable; however, the requirements of Item a above shall be satisfied. Any such sensor shall be fail-safe or have provision for calibration.

c) The materials of construction shall be chemically resistant to the range of products to be stored at the temperature range expected in service. Other physical properties shall be specified by the tank owner.

d) The permeability of the leak detection barrier shall not exceed 1×10^{-7} cm (4×10^{-5} mils) per second.

e) The material in contact with the subgrade shall be suitable for below-grade service or be protected against degradation.

f) The leak barrier shall be of one-piece construction, or the joints shall satisfy the leak tightness, permeability, and chemical resistance requirements for the base leak-barrier material. The Manufacturer and a complete description of the leak barrier material shall be identified to the tank owner.

g) The installation of sumps and pipes below the tank bottom is acceptable; however, the required leak detection and leak tightness shall be maintained. See Figure I.8 and Figure I.9 for typical details.

I.3 Cathodic Protection

Cathodic protection systems may be installed in conjunction with undertank leak detection systems. See API Recommended Practice 651 for guidelines on the use of cathodic protection methods.

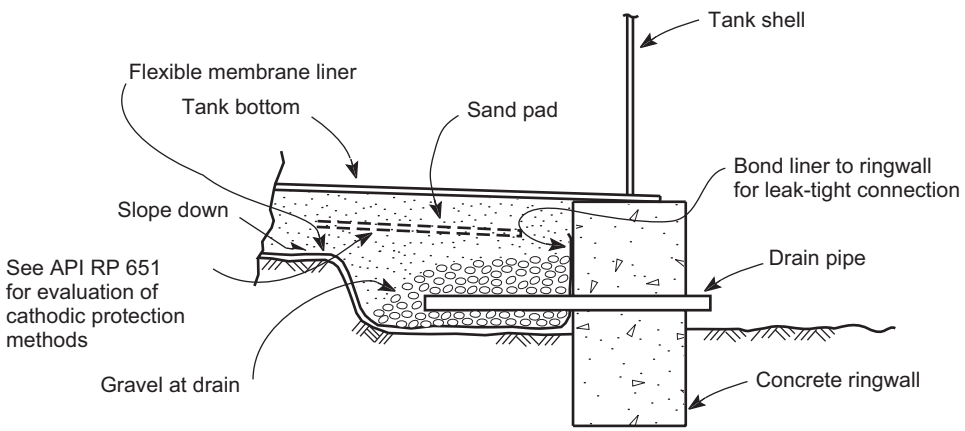

Figure I.1—Concrete Ringwall with Undertank Lead Detection at the Tank Perimeter (Typical Arrangement)

I.4 Double Steel Bottom Construction

I.4.1 If a double steel bottom is used, the details of construction shall provide for the proper support of the primary bottom and shell for all operating conditions. The design shall be evaluated to verify that the primary bottom and shell are not overstressed. The evaluation shall consider all anticipated operating conditions such as design metal temperature, maximum design temperature, fill height, hydrostatic testing, seismic conditions, and tank settlement. The evaluation is not required if the primary bottom is uniformly supported on both sides of the shell and is not structurally attached to the secondary bottom or primary bottom support.

I.4.2 For double steel bottom systems that use steel members (such as grating, structural shapes, or wire mesh) to separate the bottoms, ingress of water between the bottoms will result in local accelerated corrosion rates. If the perimeter of the bottoms is not sealed, corrosion protection of the tank bottoms shall be provided. See Figure I.4.

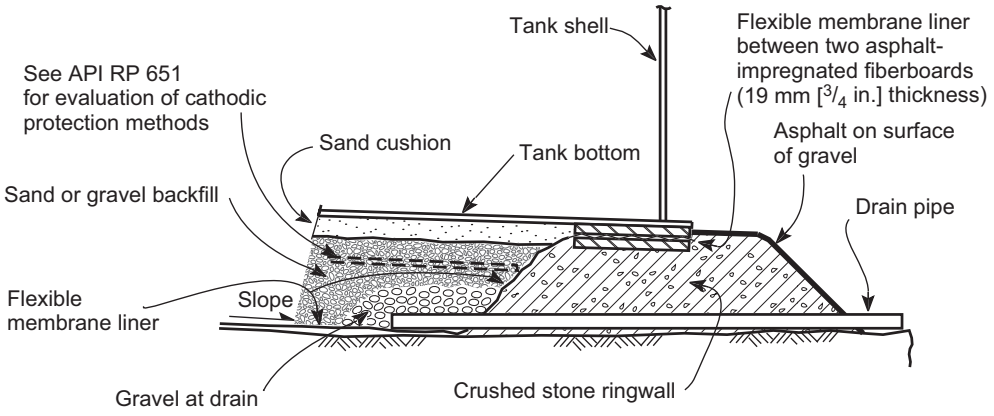

Figure I.2—Crushed Stone Ringwall with Undertank Leak Detection at the Tank Perimeter (Typical Arrangement)

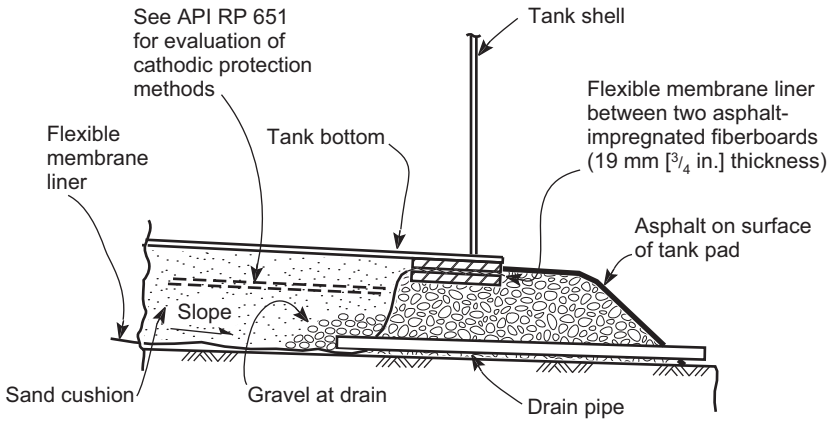

Figure I.3—Earthen Foundation with Undertank Leak Detection at the Tank Perimeter (Typical Arrangement)

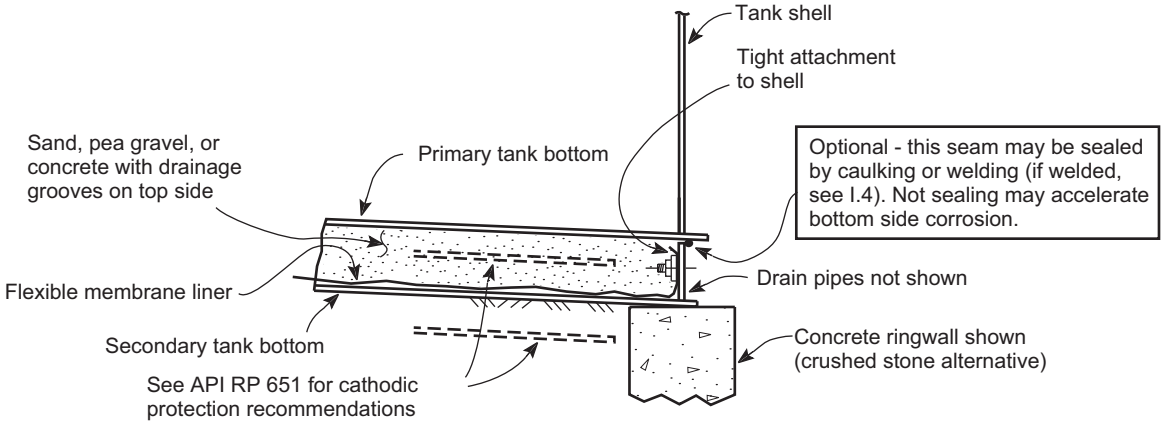

Figure I.4—Double Steel Bottom with Leak Detection at the Tank Perimeter (Typical Arrangement)

I.5 Material Requirements and Construction Details

I.5.1 The minimum thickness of flexible-membrane leak barriers shall be 800 millimicrons (30 mils) for fiber-reinforced membranes and 1000 millimicrons (40 mils) for unreinforced membranes. If clay liners are used, they shall be thick enough to meet the permeability requirements of I.2, Item d.

I.5.2 The leak barrier shall be protected as required to prevent damage during construction. If the foundation fill or tank pad material is likely to cause a puncture in the leak barrier, a layer of sand or fine gravel or a geotextile material shall be used as a protective cushion.

I.5.3 For a flexible-membrane liner installed over a steel bottom, all nicks, burrs, and sharp edges shall be removed or a layer of fine sand, gravel, or geotextile material shall be used to protect the liner.

I.5.4 The flexible leak barrier shall be covered by at least 100 mm (4 in.) of sand, except as otherwise shown in Figures I.1 through I.10. This dimension may have to be increased if cathodic protection is to be provided in the space between the tank bottom and the leak barrier.

- **I.5.5** If drain pipes are used around the tank perimeter, they shall be at least NPS 1 in diameter and have a minimum wall thickness of Schedule 40. The pipes may be perforated in the undertank area to improve their leak detection function. The inner ends and perforations of the drain pipes shall be protected from clogging by the use of gravel, screening, geotextiles, or another method approved by the tank owner. The drain pipes shall exit through the foundation and shall be visible to indicate any leakage. If specified by the owner, the undertank drains shall be fitted with a valve or piped to a leak detection well as shown in Figure I.10. The maximum spacing of drain pipes shall be 15 m (50 ft), with a minimum of four drain pipes per tank; however, two drain pipes may be used for tanks 6 m (20 ft) or less in diameter.

I.5.6 The need for pipe sleeves, expansion joints, or both in conjunction with drain pipes shall be evaluated.

I.5.7 The outlet of the drain pipes and collection sumps, if used, shall be protected from the ingress of water from external sources.

I.5.8 Leak detection systems that use sumps in the liner below the tank bottom shall have a drain line that extends from the sump to the tank perimeter. Consideration shall be given to installation of supplemental perimeter drains.

I.6 Testing and Inspection

I.6.1 The leak barrier, all leak-barrier penetrations, attachments of the leak barrier to the foundation ringwall, and other appurtenances shall be visually inspected for proper construction in accordance with applicable specifications.

- The shop and field seams of flexible-membrane liners shall pass a vacuum-box test. All leaks shall be repaired and retested. Alternative testing methods may be used with the tank owner's approval.
- **I.6.2** Proof testing of samples of the flexible-membrane liner seam shall be performed to verify the seam strength and flexibility and the adequacy of the bonding. The procedure (including testing methods) used to bond or weld the liner seams shall be submitted to the owner for review and shall specify all critical parameters, such as temperature, speed, surface preparation, and curing time, required to achieve liquid-tight seams. The required strength and flexibility of the liner seams shall be agreed upon by the tank owner and Manufacturer. The seam samples shall be produced at the beginning of each shift for each operator and welding machine.
- **I.6.3** All liner penetrations, attachments of the liner to the foundation ringwall, and other appurtenances shall be demonstrated to be leak tight. This may be demonstrated by a mock-up test, prior experience, or other methods acceptable to the owner.

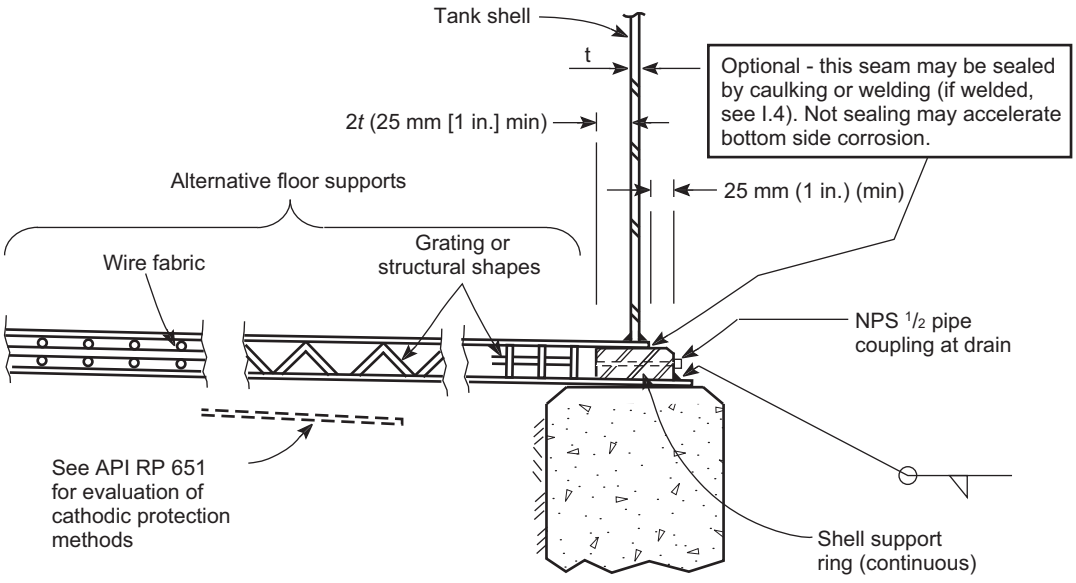

Figure I.5—Double Steel Bottom with Leak Detection at the Tank Perimeter (Typical Arrangement)

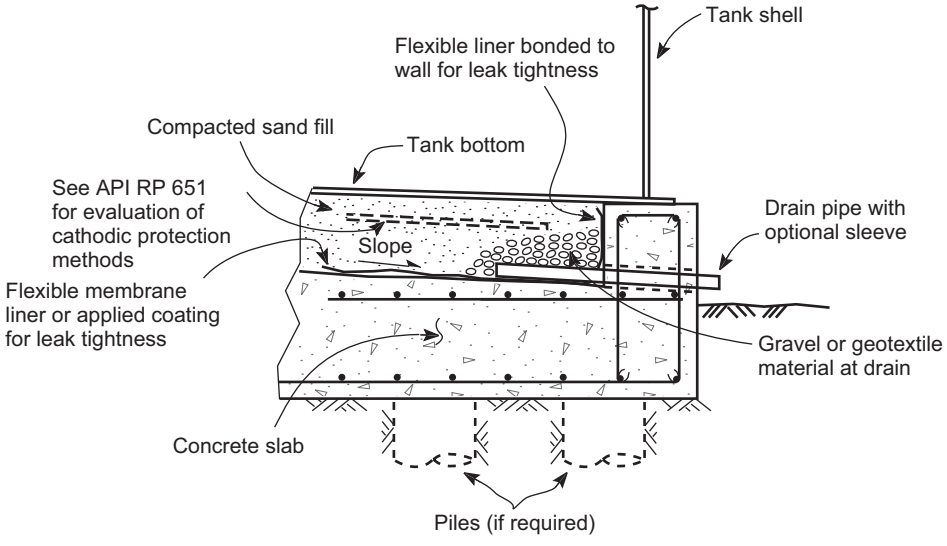

Figure I.6—Reinforced Concrete Slab with Leak Detection at the Perimeter (Typical Arrangement)

I.7 Tanks Supported by Grillage

- **I.7.1** Tanks designed and constructed in accordance with API Standard 650 that have a maximum nominal shell thickness of 13 mm (1/2 in.), including any customer specified corrosion allowance, and maximum design temperature not exceeding 93 °C (200 °F) may be supported by steel or concrete grillage. By agreement between the Purchaser and the Manufacturer, these rules may be applied to tanks with shell thickness greater than 13 mm (1/2 in.). These rules apply to single steel butt-welded bottoms supported by grillage members.

I.7.2 The thickness and design metal temperature of the bottom plate shall be in accordance with Figure 4.1.

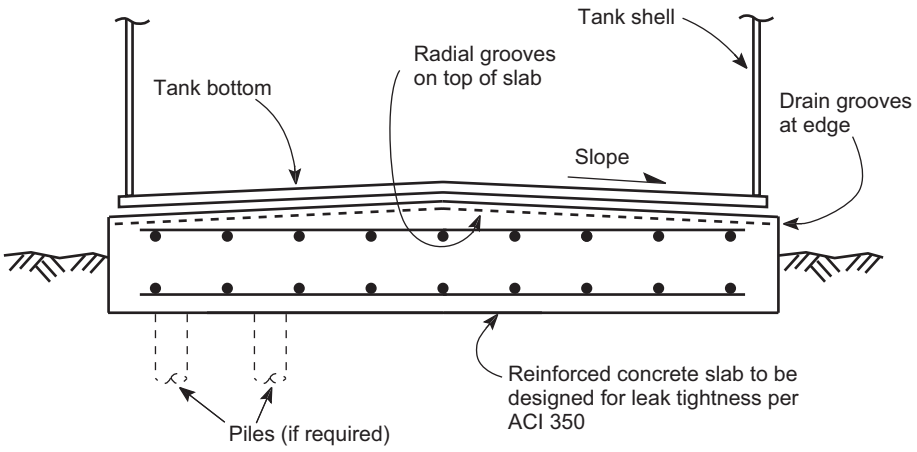

Figure I.7—Reinforced Concrete Slab

I.7.3 The maximum spacing between adjacent or radial grillage members and the bottom plate thickness shall satisfy the requirements of I.7.3.1 and I.7.3.2.

I.7.3.1 The maximum spacing between adjacent or radial grillage members shall not exceed:

$$b = \left[\frac{1.5F_y(t_g - CA)^2}{p}\right]^{0.5} \quad \text{(I.7.3.1-1)}$$

I.7.3.2 The required nominal thickness of the bottom plate supported on grillage shall not be less than that determined by the following equation:

$$t_g = \left[\frac{b^2(p)}{1.5F_y}\right]^{0.5} + CA \quad \text{(I.7.3.2-1)}$$

where

b is the maximum allowable spacing (center-to-center) between adjacent or radial grillage members, in mm (in.);

F_y is the specified minimum yield strength of bottom plate material, in MPa (psi);

t_g is the nominal thickness (including any corrosion allowance) of the bottom plate supported on grillage, in mm (in.);

CA is the corrosion allowance to be added to the bottom plate, in mm (in.). The Purchaser shall specify the corrosion allowance;

p is the uniform pressure (including the weight of the bottom plate) acting on the bottom resulting from the greater of the weight of the product plus any internal pressure, or the weight of the hydrostatic test water, in MPa (psi).

I.7.3.3 The maximum calculated deflection of the bottom plate at mid-span shall not exceed $(t_g - CA) / 2$:

$$d = \frac{0.0284pb^4}{E_s(t_g - CA)^3} \leq (t_g - CA) / 2 \qquad \text{(I.7.3.3-1)}$$

where

d is the maximum calculated deflection of the bottom plate at mid-span, in mm (in.);

E_s is the modulus of elasticity of the bottom plate material, in MPa (psi).

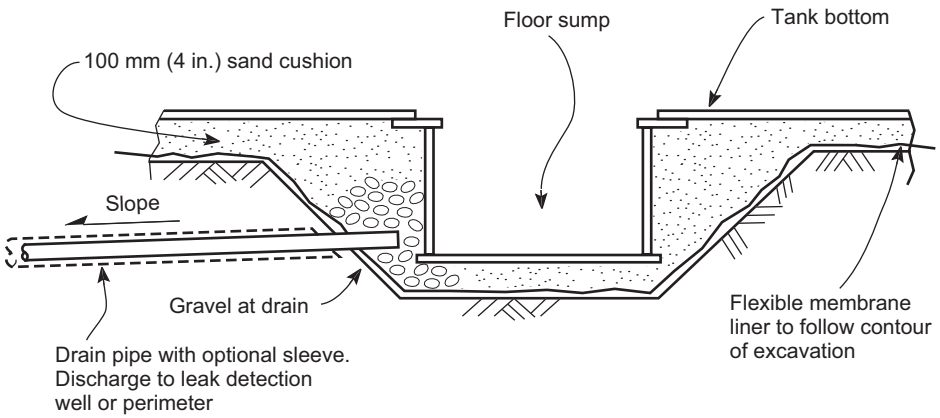

Figure I.8—Typical Drawoff Sump

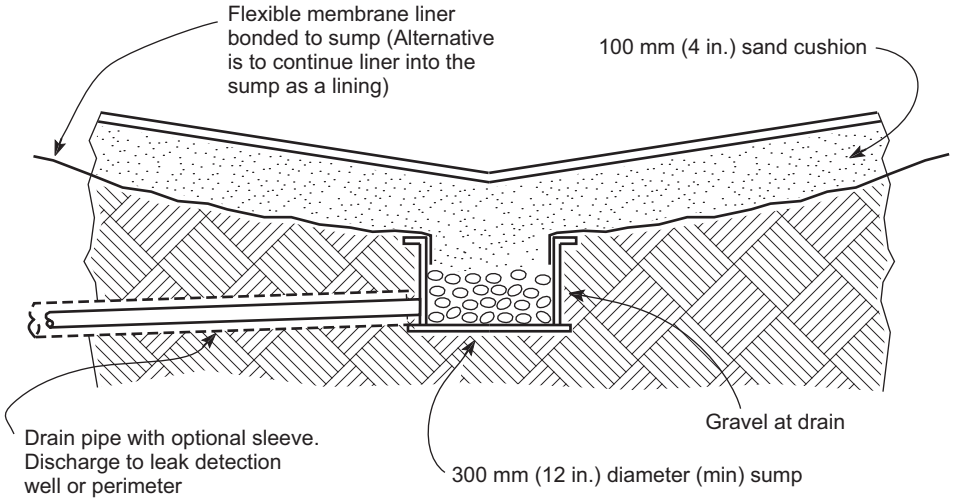

Figure I.9—Center Sump for Downward-Sloped Bottom

I.7.4 The bottom plates shall be jointed together by butt-welds having complete penetration and complete fusion. Joints shall be visually examined prior to welding to ensure the weld gap and fit-up will allow complete penetration. Each weld pass shall be visually examined. The alignment and spacing of grillage members shall be such that the joints between bottom plates are located approximately above the center of the grillage members to the greatest

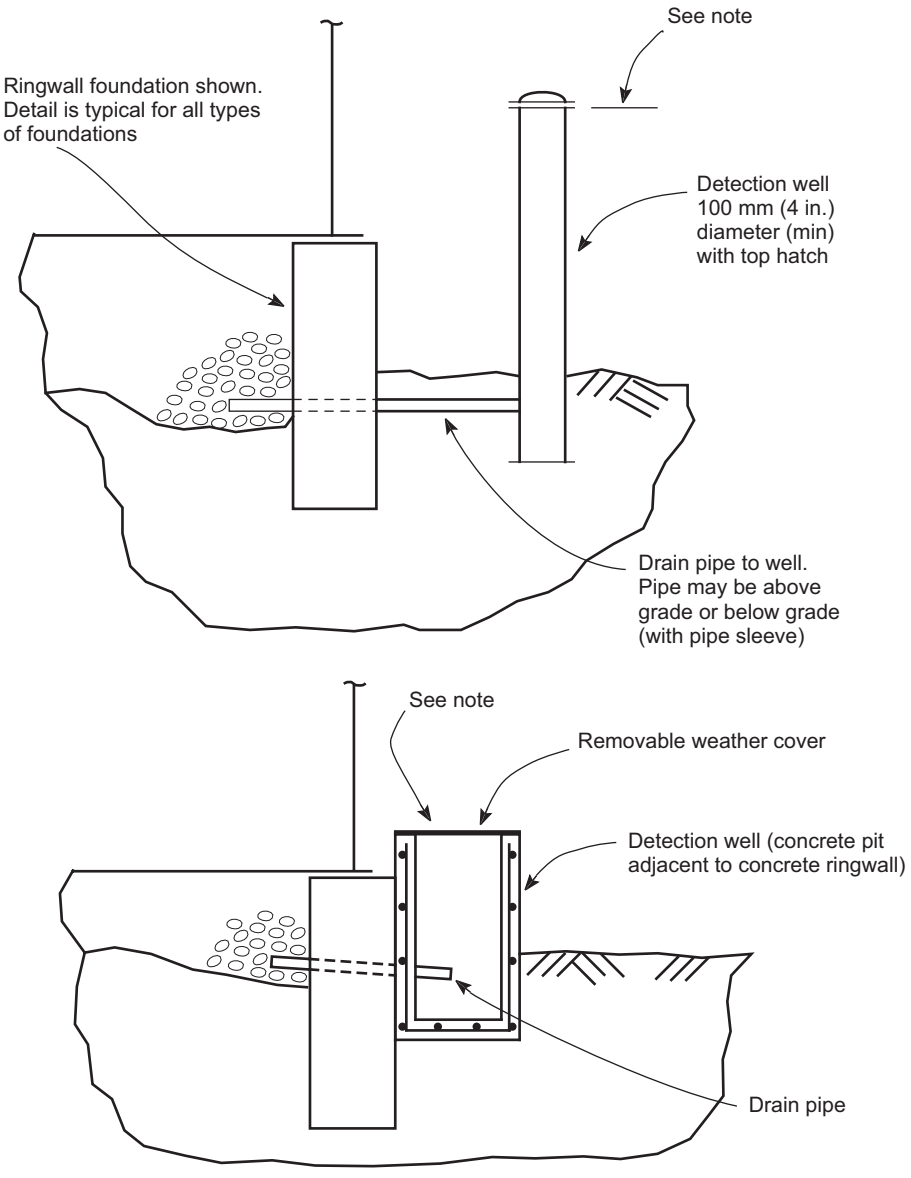

Note: Top of well shall be above maximum high water level within dike.

Figure I.10—Typical Leak Detection Wells

extent practical. Grillage members shall be arranged to minimize the length of unsupported tank shell spanning between grillage members.

I.7.5 Grillage members shall be symmetrical about their vertical centerline. Steel grillage members shall be designed to prevent web crippling and web buckling as specified in Chapter K of the AISC, *Manual of Steel Construction*. Concrete grillage members may also be used.

I.7.6 The Purchaser shall specify the corrosion allowance to be added to steel grillage members. If a corrosion allowance is required, the manner of application (added to webs only, added to webs and flanges, added to one surface, added to all surfaces, and so forth) shall also be specified.

I.7.7 For tanks designed to withstand wind or seismic loads, provisions shall be made to prevent sliding, distortion, and overturning of the grillage members. Lateral bracing between the top and bottom flanges of adjacent steel

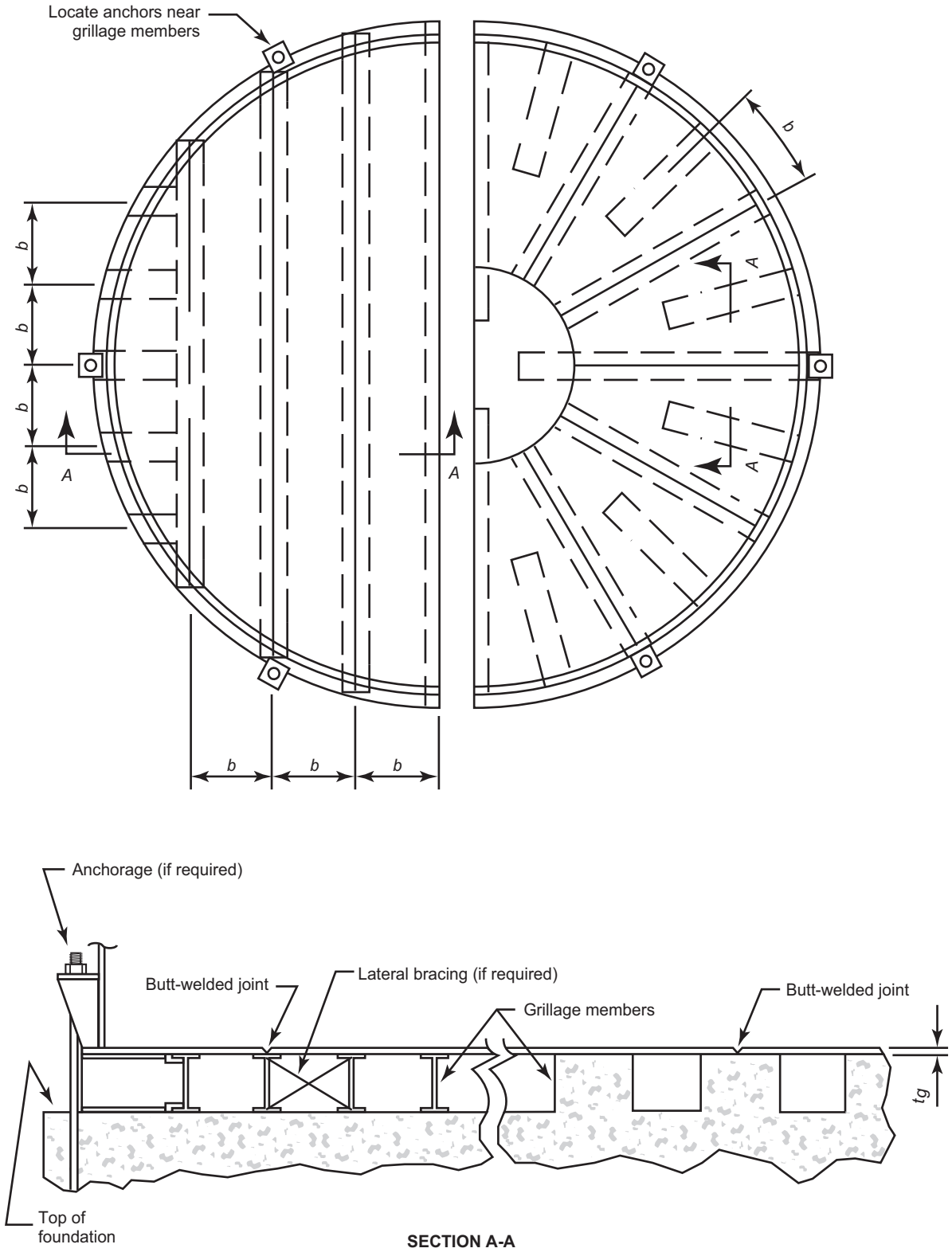

Figure I.11—Tanks Supported by Grillage Members (General Arrangement)

grillage members may be required to prevent distortion and overturning. The lateral bracing and connections shall be designed to transfer the specified lateral loads. If friction forces between the grillage members and the foundation are not adequate to transfer the specified later load, the grillage members shall be anchored to the foundation.

I.7.8 The tank shall be anchored to resist uplift forces (in excess of the corroded dead load) due to pressure and wind or seismic overturning. Anchors shall be located near the intersection of the tank shell and a grillage member, or near an additional stiffening member.

I.7.9 The tank shell shall be designed to prevent local buckling at the grillage members and consideration shall be given to shell distortion when the spacing of the grillage members is determined.

I.7.10 The bottom plate and grillage members directly beneath roof support columns and other items supported by the bottom shall be designed for the loads imposed. Additional support members are to be furnished if required to adequately support the bottom.

I.7.11 If flush-type cleanouts or flush-type shell connections are furnished, additional support members shall be provided to adequately support the bottom-reinforcing and bottom-transition plates. As a minimum, the additional support members shall consist of a circumferential member (minimum length and location according to Method A of Figure 5-12) and radial support members. The radial support members shall extend from the circumferential member to the inner edge of the bottom reinforcing (for flush-type cleanouts) or bottom-transition plate (for flush-type shell connections). The circumferential spacing of the radial support members shall not exceed 300 mm (12 in.).

I.7.12 For tanks located in a corrosive environment, and where atmospheric corrosion due to wet/dry cycles may occur, consideration shall be given to protecting the soil side of the bottom plates, grillage members, and in particular, the contact surface between the bottom plates and grillage members by utilizing protective coatings or by adding a corrosion allowance to these members.

I.8 Typical Installations

Although it is not the intent of this Annex to provide detailed designs for the construction of undertank leak detection systems and tanks supported by grillage, Figures I.1 through I.11 illustrate the general use and application of the recommendations presented in this Annex.

Annex J
(normative)

Shop-Assembled Storage Tanks

J.1 Scope

J.1.1 This Annex provides requirements for the design and fabrication of vertical storage tanks in sizes that permit complete shop assembly and delivery to the installation site in one piece. Storage tanks designed according to this Annex shall not exceed 6 m (20 ft) in diameter.

• **J.1.2** The application of this Annex to the design and fabrication of shop-assembled storage tanks shall be mutually agreed upon by the Purchaser and the Manufacturer.

J.2 Materials

J.2.1 The material requirements of Annex A of this standard are applicable, except as noted in J.2.2.

J.2.2 The selection of shell or bottom plate materials exceeding a nominal thickness of 13 mm ($^1/_2$ in.) shall be based upon the requirements of Section 4 of this standard.

J.3 Design

J.3.1 Joints

J.3.1.1 Joints shall be designed as specified in 5.1; however, lap-welded joints in bottoms are not permissible. In addition, the modifications given in J.3.1.2 through J.3.1.5 are applicable.

J.3.1.2 All shell joints shall be butt-welded so that full penetration is produced without the use of back-up bars.

J.3.1.3 Shell plates shall be sized to limit the number of plates to the smallest practical number consistent with sound economic practice. Each course should preferably be constructed of one plate.

J.3.1.4 Top angles are not required for flanged-roof tanks.

J.3.1.5 Joints in bottom plates shall be butt-welded. The welding shall produce complete penetration of the parent metal.

J.3.2 Bottoms

J.3.2.1 All bottom plates shall have a minimum nominal thickness of 6 mm (0.236 in.) (49.8 kg/m^2 [10.2 lbf/ft^2], see 4.2.1.2 and 5.4.1).

J.3.2.2 Bottoms shall be constructed of a minimum number of pieces; wherever feasible they shall be constructed of one piece.

J.3.2.3 Bottoms may be flat or flat flanged. A flat-bottom shall project at least 25 mm (1 in.) beyond the outside diameter of the weld attaching the bottom to the shell plate. A flat-flanged bottom shall have an inside corner radius that is not less than three times the bottom thickness and a straight flange that is a minimum of 19 mm ($^3/_4$ in.).

J.3.2.4 For flat bottoms, the attachment between the bottom edges of the lowest course shell plate and the bottom plate shall be a continuous fillet weld laid on each side of the shell plate. Each fillet weld shall be sized in accordance with 5.1.5.7. A flat-flanged bottom shall be attached to the shell by full-penetration butt-welds.

J.3.3 Shells

Shell plates shall be designed in accordance with the formula given in A.4.1, but the nominal thickness of shell plates shall not be less than the following:

a) for tanks with a diameter less than or equal to 3.2 m (10.5 ft) to 4.8 mm ($^3/_{16}$ in.);

b) for tanks with a diameter greater than 3.2 m (10.5 ft) to 6 mm (0.236 in.).

J.3.4 Wind Girders For Open-Top Tanks

Open-top tanks shall be provided with wind girders as specified in 5.9.

J.3.5 Roofs

J.3.5.1 General

Roofs for tanks constructed in accordance with this Annex shall be of the self-supporting type and shall conform to either J.3.5.2 or J.3.5.3.

J.3.5.2 Cone Roofs

Self-supporting cone roofs shall be designed as specified in 5.10.5, except they may be provided with a flange that will permit butt-welded attachment to the shell (see J.3.1.4). Flanges shall be formed with a minimum inside corner radius of three times the roof thickness or 19 mm ($^3/_4$ in.), whichever is larger.

J.3.5.3 Dome and Umbrella Roofs

Self-supporting dome and umbrella roofs shall be designed as specified in 5.10.6, except they may be flanged as described in J.3.5.2. For dome roofs that are flanged, the radius of curvature shall not be limited to the maximum requirements given in 5.10.6; instead, the curvature shall be limited by the depth of the roof, including the crown and knuckle depth, as listed in Table J.1a and Table J.1b.

J.3.5.4 Top Angles

When top angles are required, they shall be attached as specified in 5.10.7.

Table J.1a—Minimum Roof Depths for Shop-Assembled Dome-Roof Tanks (SI)

Diameter	Depth
m	mm
≤ 1.8	50
≤ 2.4	90
≤ 3.0	140
≤ 3.7	200
≤ 4.3	275
≤ 4.9	375
≤ 6.0	500

Table J.1b—Minimum Roof Depths for Shop-Assembled Dome-Roof Tanks (USC)

Diameter	Depth
ft	in.
6	2
8	$3^1/_2$
10	$5^1/_2$
12	8
14	11
16	15
20	20

J.3.6 Tank Connections and Appurtenances

J.3.6.1 Manholes, nozzles, and other connections in the shell shall be constructed and attached as specified in 5.7, but it is unlikely that reinforcing plates will be required for manholes and nozzles in the tank shell. The need for reinforcement shall be checked according to the procedure given in 5.7.2. Since the nominal shell-plate thicknesses required by J.3.3 will normally exceed the calculated thickness, the excess material in the shell should satisfy the reinforcement requirements in nearly all cases.

J.3.6.2 The requirements of 5.7.3 for the spacing of welds do not apply except for the requirement that the spacing between the toes of welds around a connection shall not be less than 2.5 times the shell thickness at the connection.

- **J.3.6.3** The roofs of tanks constructed in accordance with this Annex will be inherently strong because of the limitations in diameter required for shipping clearances. Thus, reinforcement of roof manholes and nozzles is not required unless specifically requested by the Purchaser or unless roof loads exceed 1.2 kPa (25 lbf/ft^2), in which case the amount and type of reinforcement shall be agreed upon by the Purchaser and the Manufacturer.

J.3.6.4 For shell manholes and nozzles the radiographic requirements of 5.7.3.4 do not apply.

J.3.6.5 For flush-type cleanout fittings, the provisions for stress relief specified in 5.7.4 and 5.7.7.3 are not required unless any plate in the assembly has a thickness greater than 16 mm ($^5/_8$ in.).

J.3.6.6 For flush-type shell connections, the provisions for stress relief specified in 5.7.4 and 5.7.8.3 are not required unless any plate in the assembly has a thickness greater than 16 mm ($^5/_8$ in.).

J.3.7 Corrosion Allowance

- **J.3.7.1** If the Purchaser requires that a corrosion allowance be provided, the allowance and the areas to which the allowance is to be added shall be specified. If a corrosion allowance is specified without an indication of the area to which it is to be added, the Manufacturer shall assume that it is to be added only to the calculated shell-plate thickness.

- **J.3.7.2** When a corrosion allowance is specified for the roof and bottom plates, it shall be added to the minimum nominal thicknesses.

J.3.8 Lifting Lugs

J.3.8.1 Lugs or clips for use in loading and unloading tanks and for use in placing tanks on foundations shall be provided on all tanks constructed in accordance with this Annex.

• **J.3.8.2** There shall be a minimum of two lugs on each tank. The location of the lugs shall be agreed upon by the Purchaser and the Manufacturer. The lugs shall preferably be located at the top of the tank, in pairs, 180 degrees apart.

J.3.8.3 Lugs and their attachment welds shall be designed to carry their share of the applied load (twice the empty weight of the tank) distributed in a reasonable manner and based on a safety factor of 4.

J.3.8.4 Lugs capable of carrying the load described in J.3.8.3 shall be designed and attached in a manner that will not damage the tank.

J.3.9 Anchoring

Because of the proportions of shop-assembled storage tanks, overturning as a result of wind loading must be considered. If necessary, adequate provisions for anchoring shall be provided.

J.4 Fabrication and Construction

J.4.1 General

J.4.1.1 Fabrication and construction shall be in accordance with the applicable provisions of Sections 6 and 7 of this standard. Erection shall be interpreted as assembly, and it shall be understood that the entire vessel is constructed in the shop and not at the field site.

J.4.1.2 Section 7.2.2 and Section 7.2.5 of this standard are not applicable to the bottoms and roofs of shop-assembled tanks.

J.4.2 Testing, Repairs, and Inspection

J.4.2.1 General

For testing of, repairs to, and inspection of shop-assembled tanks, the requirements of J.4.2.2 through J.4.2.4 replace those of 7.3.2 through 7.3.6.

• **J.4.2.2 Testing**

Unless otherwise specified by the Purchaser, as an alternative to the requirements of 7.3.2 through 7.3.7, a tank may be shop tested for leaks by the following method:

a) The tank bottom shall be braced by securely attaching an external stiffening member as required to prevent permanent deformation during the test.

b) All openings shall be closed with plugs or covers as needed. Bolts and gaskets of the size and type required for final installation shall be used during the test.

c) An internal air pressure of 14 kPa to 21 kPa (2 lbf/in.^{2} to 3 lbf/in.^{2}) gauge shall be applied to the tank. For tanks with a diameter of 3.7 m (12 ft) or less, a maximum pressure of 35 kPa (5 lbf/in.^{2}) gauge shall be used.

d) Soap film, linseed oil, or another material suitable for the detection of leaks shall be applied to all shell, bottom, roof, and attachment welds, and the tank shall be carefully examined for leaks.

e) After the air pressure is released, the external stiffening member shall be removed, and any weld scars shall be repaired.

J.4.2.3 Repairs

All weld defects found by the leak test or by radiographic examination shall be repaired as specified in Section 8.

J.4.2.4 Inspection

The Purchaser's inspector shall have free entry to the Manufacturer's shop at all times. The Manufacturer shall afford the Purchaser's inspector reasonable facilities to assure the inspector that the work is being performed in accordance with the requirements of this standard. All material and workmanship shall be subject to the replacement requirements of 6.2.3.

J.5 Examination of Shell Joints

J.5.1 The methods of examining shell joints described in Section 8 apply to shop-assembled tanks, but spot radiography may be omitted when a joint efficiency of 0.70 is used (see A.3.4).

J.5.2 When radiographic examination is required (joint efficiency = 0.85), the spot radiographs of vertical joints shall conform to 8.1.2.2, Item a only, excluding the 10 mm ($^3/_8$ in.) shell thickness limitation in Item a and excluding the additional random spot radiograph required by Item a. The spot radiographs of horizontal joints shall conform to 8.1.2.3.

J.6 Welding Procedure and Welder Qualifications

The requirements for qualification of welding procedures and welders given in Section 9 apply to shop-assembled tanks.

J.7 Marking

Shop-assembled tanks shall be marked in accordance with Section 10, except that 10.1.4 and 10.2 are not applicable. The nameplate (see Figure 10-1) shall indicate that the tank has been designed in accordance with this Annex.

Annex K
(informative)

Sample Applications of the Variable-Design-Point Method to Determine Shell-Plate Thickness

K.1 Variable-Design-Point, Example #1

K.1.1 Data

[ ] Design condition [x] Test condition

Specific gravity of liquid, G: 1.0

Corrosion allowance: ..... 0.0 mm (0.0 in.)

Tank diameter, D: ..... 85.0 m (280 ft)

Design Liquid Level (also total height of tank for the examples in this Annex), H: ..... 19.2 m (64 ft)

Number of courses: 8.0

Allowable stress for design, S_d: ..... —

Allowable stress for testing, S_t: ..... 208 MPa (30,000 lbf/in.^{2})

Height of bottom course, h_1: ..... 2,400 mm (96 in.)

Nominal tank radius, r: ..... 42,500 mm (1,680 in.)

(See 5.6.4 for definition of nomenclature.)

K.1.2 Calculations

First Course (t_1)

For the test condition, t_1 is equal to t_{1t} but not greater than t_{pt}.

In SI units:

$$t_{pt} = \frac{4.9D(H-0.3)}{St} = \frac{(4.9)(85)(19.2-0.3)}{208} = 37.85$$

$$t_{1t} = \left[1.06 - \frac{0.0696D}{H}\sqrt{\frac{H}{S_t}}\right]\left[\frac{(4.9HD)}{S_t}\right]$$

$$= \left[1.06 - \frac{0.0696(85)}{19.2}\sqrt{\frac{19.2}{208}}\right]\left[\frac{4.9(19.2)(85)}{208}\right]$$

$= [1.06 - (0.3081)(0.3038)][38.45]$

$= [1.06 - 0.0936][38.45]$

$= [0.9664][38.45]$

$= 37.15 \text{ mm} = t_1$

In USC units:

$$t_{pt} = \frac{2.6D(H-1)}{St} = \frac{2.6(280)(64-1)}{30{,}000} = 1.529$$

$$t_{1t} = \left[1.06 - \frac{(0.463D)}{H}\sqrt{\frac{H}{S_t}}\right]\left[\frac{(2.6HD)}{S_t}\right]$$

$$= \left[1.06 - \frac{0.463(280)}{64}\sqrt{\frac{64}{30{,}000}}\right]\left[\frac{2.6(64)(280)}{30{,}000}\right]$$

$= [1.06 - (2.026)(0.0462)][1.553]$

$= [1.06 - 0.0936][1.553]$

$= [0.9664][1.553]$

$= 1.501 \text{ in.} = t_1$

K.2 Variable-Design-Point, Example #2

K.2.1 Data

In USC units:

$D = 280$ ft

$H = 40$ ft

$G = 0.85$

Course	Course Height	Course Height (h)	H	CA	Material
	ft	in.	ft	in.	
1	8	96	40	0.125	A573-70
2	8	96	32	0.125	A573-70
3	8	96	24	0.0625	A573-70
4	8	96	16	0	A36
5	8	96	8	0	A36

Material	S_d	S_t
	psi	psi
A573-70	28,000	30,000
A36	23,200	24,900

K.2.2 Bottom Course (Course 1)

K.2.2.1 Design Condition

t_{pd} = $2.6 \times D \times (H - 1) \times G/S_d + CA$= 0.987 in.

t_{1d} = $(1.06 - (0.463 \times D/H) \times (HG/S_d)^{0.5}) \times (2.6HDG/S_d) + CA$ = 0.962 in.

t_{1d} need not be greater than t_{pd}

t_{1d} = minimum of above thicknesses = 0.962 in.

K.2.2.2 Hydrostatic Test Condition

t_{pt} = $2.6 \times D \times (H - 1) / S_t$ = 0.946 in.

$t_{1d\,t}$ = $(1.06 - (0.463 \times D/H) \times (H/S_t)^{0.5}) \times (2.6HD/S_t)$ = 0.914 in.

t_{1t} need not be greater than t_{pt}

t_{1t} = minimum of above thicknesses = 0.914 in.

t_{use} = nominal thickness used

t_{min} = minimum nominal thickness required, the greater of t_d or t_t

t_{min} = 0.962 in. (controlled by t_{1d})

t_{use} = 1.000 in.

NOTE $t_{use} > t_{min}$ The greater thickness will be used for subsequent calculations and noted as the required thickness, therefore, t_{1d} = 1.000 in.

K.2.2.3 Check $L/H \leq 2$

L = $(6Dt)^{0.5}$

t = $t_{use} - CA$ = 0.875 in.

L = 38.34

L/H = $0.96 \leq 2$

K.2.3 Shell Course 2

K.2.3.1 Design Condition

h_1 = 96 in.

r = 1680 in.

t_{1d} = 1.000 in.

CA = 0.125 in.

t_1 = 0.875 in.

$h_1/(r \times t_1)^{0.5} = 2.504 > 1.375$ and < 2.625

$t_2 = t_{2a} + (t_1 - t_{2a})(2.1 - h_1/(1.25 \times (rt_1)^{0.5})$

t_{2a} = 0.634 in. (see K.2.4)

t_2 = 0.657 in.

$t_{2d} = t_2 + CA = 0.782$ in.

K.2.3.2 Hydrostatic Test Condition

h_1 = 96 in.

r = 1680 in.

t_{1t} = 1.000 in.

t_1 = 1.000 in.

$h_1/(r \times t_1)^{0.5} = 2.342 > 1.375$ and < 2.625

$t_2 = t_{2a} + (t_1 - t_{2a})(2.1 - h_1/(1.25 \times (rt_1)^{0.5})$

t_{2a} = 0.699 in. (See K.2.4)

t_2 = 0.767 in.

t_{2t} = 0.767 in.

$t_{\min}$ = greater of t_{2d} or $t_{2t} = 0.782$ in.

t_{use} = 0.8125 in.

NOTE $t_{use} > t_{\min}$, however, the extra thickness will not be used for subsequent calculations, therefore, t_{2d} = 0.782 in.

K.2.4 Second Course as Upper Shell Course

K.2.4.1 Design Condition

D = 280 ft

Material A573-70

S_d = 28,000 psi

S_t = 30,000 psi

CA = 0.125 in.

G = 0.85

H = 32 ft

r = 1680 in.

C = $(K^{0.5}(K-1))/(1+K^{1.5})$

K = t_L/t_u

x_1 = $0.61(rt_u)^{0.5} + 3.84CH$

x_2 = $12CH$

x_3 = $1.22 \times (rt_u)^{0.5}$

t_L = 0.875 in. (thickness of bottom shell course less CA)

K.2.4.2 Trials

starting $t_u = 2.6D(H-1)G/S_d = 0.6851$ in.

	t_u	K	C	x_1	x_2	x_3	x	$t_d - CA$
	in.			in.	in.	in.	in.	in.
1	0.685	1.277	0.128	36.449	49.231	41.390	36.449	0.640
2	0.640	1.367	0.165	40.298	63.420	40.006	40.006	0.634
3	0.634	1.381	0.171	40.885	65.575	39.801	39.801	0.634
4	0.634	1.380	0.170	40.851	65.450	39.813	39.813	0.634

$t_d - CA$ = 0.634 in.

t_d = 0.759 in.

K.2.4.3 Hydrotest Condition

t_L = 0.914 in. (calculated hydrostatic thickness of bottom shell course)

K.2.4.4 Trials

starting $t_u = 2.6D(H-1)/S_t = 0.752$ in.

	t_u	K	C	x_1	x_2	x_3	x	t_t
	in.			in.	in.	in.	in.	in.
1	0.752	1.215	0.101	34.137	38.909	43.371	34.137	0.708
2	0.708	1.292	0.134	37.548	51.616	42.061	37.548	0.701
3	0.701	1.305	0.140	38.098	53.658	41.855	38.098	0.699
4	0.699	1.307	0.141	38.188	53.989	41.822	38.188	0.699

t_t = 0.699 in.

K.2.5 Shell Course 3

K.2.5.1 Design Condition

D = 280 ft

Material A573-70

S_d = 28,000 psi

S_t = 30,000 psi

CA = 0.0625 in.

G = 0.85

H = 24 ft

r = 1680 in.

$C = (K^{0.5}(K-1))/(1+K^{1.5})$

$K = t_L/t_u$

$x_1 = 0.61(rt_u)^{0.5} + 3.84CH$

$x_2 = 12CH$

$x_3 = 1.22 \times (rt_u)^{0.5}$

t_L = 0.657 in. (t_d of lower shell course less CA)

K.2.5.2 Trials

starting $t_u = 2.6D(H-1)G/S_d = 0.508$ in.

	t_u	K	C	x_1	x_2	x_3	x	$t_d - CA$
	in.			in.	in.	in.	in.	in.
1	0.508	1.293	0.135	30.256	38.846	35.651	30.256	0.475
2	0.475	1.385	0.172	33.089	49.572	34.452	33.089	0.469
3	0.469	1.400	0.178	33.550	51.310	34.262	33.550	0.469
4	0.469	1.403	0.179	33.626	51.595	34.231	33.626	0.468

$t_d - CA$ = 0.468 in.

t_d = 0.531 in.

K.2.5.3 Hydrotest Condition

t_L = 0.767 in. (calculated hydrostatic thickness of lower shell course)

K.2.5.4 Trials

starting $rt_u = 2.6D(H-1)/S_t = 0.558$ in.

	t_u	K	C	x_1	x_2	x_3	x	t_t
	in.			in.	in.	in.	in.	in.
1	0.558	1.375	0.168	34.186	48.461	37.358	34.1864	0.513
2	0.513	1.495	0.214	37.637	61.641	35.825	35.825	0.510
3	0.510	1.505	0.218	37.905	62.659	35.709	35.7092	0.510
4	0.510	1.504	0.217	37.886	62.586	35.717	35.7174	0.510

t_t = 0.510 in.

t_{min} = 0.531 in.

t_{use} = 0.531 in.

K.2.6 Shell Course 4

K.2.6.1 Design Condition

D = 280 ft

Material A36

S_d = 23,200 psi

S_t = 24,900 psi

CA = 0 in.

G = 0.85

H = 16 ft

r = 1680 in.

$C = (K^{0.5}(K-1))/(1+K^{1.5})$

$K = t_L/t_u$

$x_1 = 0.61(rt_u)^{0.5} + 3.84CH$

$x_2 = 12CH$

$x_3 = 1.22 \times (rt_u)^{0.5}$

t_L = 0.468 in. (t_d of lower shell course less CA)

K.2.6.2 Trials

starting $t_u = 2.6D(H - 1)G/S_d = 0.400$ in.

	t_u	K	C	x_1	x_2	x_3	x	$t_d - CA$
	in.			in.	in.	in.	in.	in.
1	0.400	1.171	0.082	20.827	15.665	31.629	15.665	0.392
2	0.392	1.195	0.093	21.339	17.769	31.306	17.769	0.387
3	0.387	1.210	0.099	21.640	19.001	31.118	19.001	0.385
4	0.385	1.218	0.103	21.818	19.732	31.008	19.732	0.383

$t_d - CA$ = 0.383 in.

t_d = 0.383 in.

K.2.6.3 Hydrotest Condition

t_L = 0.510 in. (calculated hydrostatic thickness of lower shell course)

K.2.6.4 Trials

starting $t_u = 2.6D(H - 1)/S_t = 0.439$ in.

	t_u	K	C	x_1	x_2	x_3	x	t_t
	in.			in.	in.	in.	in.	in.
1	0.439	1.1633	0.078	21.357	14.999	33.115	14.999	0.431
2	0.431	1.18301	0.087	21.767	16.713	32.838	16.713	0.427
3	0.427	1.19458	0.092	22.007	17.710	32.679	17.710	0.425
4	0.425	1.20142	0.095	22.147	18.295	32.586	18.295	0.423

t_t = 0.423 in.

t_{min} = 0.423 in.

t_{use} = 0.4375 in.

NOTE $t_{use} > t_{use\ min}$, however, it is controlled by hydrotest, therefore, t_{1d} remains at 0.383 for subsequent calculations

K.2.7 Shell Course 5

K.2.7.1 Design Condition

D = 280 ft

Material A36

S_d = 23,200 psi

S_t = 24,900 psi

CA = 0 in.

G = 0.85

H = 8 ft

r = 1680 in.

C = $(K^{0.5}(K - 1))/(1 + K^{1.5})$

K = t_L/t_u

x_1 = $0.61(rt_u)^{0.5} + 3.84CH$

x_2 = $12CH$

x_3 = $1.22 \times (rt_u)^{0.5}$

t_L = 0.383 in. (t_d of lower shell course less CA)

K.2.7.2 Trials

starting $t_u = 2.6D(H - 1)G/S_d = 0.187$ in.

	t_u	K	C	x_1	x_2	x_3	x	$t_d - CA$
	in.			in.	in.	in.	in.	in.
1	0.187	2.051	0.382	22.546	36.695	21.607	21.607	0.165
2	0.165	2.316	0.443	23.762	42.486	20.334	20.334	0.168
3	0.168	2.277	0.434	23.596	41.696	20.507	20.507	0.168
4	0.168	2.282	0.435	23.619	41.803	20.484	20.484	0.168

$t_d - CA$ = 0.168 in.

t_d = 0.168 in.

K.2.7.3 Hydrotest Condition

t_L = 0.423 in. (calculated hydrostatic thickness of lower shell course)

K.2.7.4 Trials

starting $t_u = 2.6D(H - 1)/S_t = 0.205$ in.

	t_u	K	C	x_1	x_2	x_3	x	t_t
	in.			in.	in.	in.	in.	in.
1	0.205	2.06791	0.386	23.1831	37.10029	22.622	22.6219	0.179
2	0.179	2.36726	0.453	24.4925	43.50275	21.143	21.1433	0.182
3	0.182	2.3205	0.444	24.3042	42.58296	21.355	21.3553	0.182
4	0.182	2.32709	0.445	24.3311	42.71425	21.325	21.325	0.182

t_t = 0.182 in.

$t_{\text{use min}}$ = 0.182 in.

t_{use} = 0.375 in.

NOTE Minimum nominal thickness is $^3/_8$ in.

K.2.8 Shell Design Summary

As required by W.1.5 to be listed on drawings.

Course	Material	S_d	S_t	t_d	t_t	t_{min}	t_{use}
		in.	in.	in.	in.	in.	in.
1	A573-70	28,000	30,000	1.000	0.914	1.000	1.000
2	A573-70	28,000	30,000	0.782	0.767	0.782	0.813
3	A573-70	28,000	30,000	0.531	0.510	0.531	0.531
4	A36	23,200	23,200	0.383	0.423	0.423	0.438
5	A36	23,200	23,200	0.168	0.182	0.182	0.375

(Sample calculated shell-plate thicknesses for various tank sizes and allowable stresses are given in Tables K.1a through K.3b.)

Table K.1a—Shell-Plate Thicknesses Based on the Variable-Design-Point Method (See 5.6.4) Using 2400-mm Courses and an Allowable Stress of 159 MPa for the Test Condition (SI)

Tank Des. Liq. Lvl. m	Tank Diameter m	Weight of Shell Mg	Shell Plate Thickness for Course, mm								Nominal Tank Volume m^3
			1	2	3	4	5	6	7	8	
12	60	233	21.40	16.18	11.96	8.00	8.00	—	—	—	33,900
	65	282	22.99	17.42	12.90	10.00	10.00	—	—	—	39,800
	75	363	26.09	20.95	14.58	10.00	10.00	—	—	—	53,000
	80	408	27.59	22.97	15.39	10.02	10.00	—	—	—	60,300
	85	457	29.06	24.95	16.21	10.59	10.00	—	—	—	68,100
	90	510	30.51	26.88	17.01	11.16	10.00	—	—	—	76,300
	100	621	33.31	30.59	18.57	12.28	10.00	—	—	—	94,200
	105	680	34.66	32.40	19.32	12.84	10.00	—	—	—	103,900
	110	741	35.99	34.21	20.06	13.39	10.00	—	—	—	114,000
	115	804	37.29	35.94	20.78	13.93	10.00	—	—	—	124,600
14.4	55	276	23.90	18.85	14.99	11.06	8.00	8.00	—	—	34,200
	60	322	25.90	20.43	16.29	11.96	8.00	8.00	—	—	40,700
	65	388	27.85	22.54	17.49	12.89	10.00	10.00	—	—	47,800
	75	505	31.65	27.47	19.76	14.78	10.00	10.00	—	—	63,600
	80	569	33.50	29.85	20.92	15.71	10.00	10.00	—	—	72,400
	85	638	35.32	32.17	22.05	16.63	10.53	10.00	—	—	81,700
	90	711	37.11	34.44	23.17	17.54	11.08	10.00	—	—	91,600
16.8	50	306	25.42	20.83	17.30	13.69	10.15	8.00	8.00	—	33,000
	55	364	27.97	22.77	18.98	14.96	11.06	8.00	8.00	—	39,900
	60	428	30.42	25.25	20.54	16.27	11.96	8.00	8.00	—	47,500
	65	514	32.73	28.17	22.02	17.59	12.89	10.00	10.00	—	55,700
	75	671	37.24	33.81	25.01	20.17	14.72	10.00	10.00	—	74,200
	77	705	38.12	34.91	25.60	20.69	15.09	10.00	10.00	—	78,200
19.2	50	390	29.12	24.42	20.95	17.28	13.69	10.15	8.00	8.00	37,700
	55	466	32.03	27.03	22.92	18.95	14.98	11.06	8.00	8.00	45,600
	60	551	34.95	30.39	24.75	20.63	16.27	11.96	8.00	8.00	54,300
	62.5	610	36.29	32.04	25.66	21.47	16.91	12.41	10.00	10.00	58,900

Table K.1b—Shell-Plate Thicknesses Based on the Variable-Design-Point Method (See 5.6.4) Using 96-in. Courses and an Allowable Stress of 23,000 lbf/in.^{2} for the Test Condition (USC)

Tank Des. Liq. Lvl. ft	Tank Diameter ft	Weight of Shell tons	Shell Plate Thickness for Course, in.								Nominal Tank Volume bbl
			1	2	3	4	5	6	7	8	
40	200	272	0.871	0.659	0.487	0.317	0.313	—	—	—	224,000
	220	333	0.949	0.720	0.533	0.375	0.375	—	—	—	271,000
	240	389	1.025	0.807	0.574	0.375	0.375	—	—	—	322,500
	260	453	1.099	0.907	0.613	0.398	0.375	—	—	—	378,500
	280	522	1.171	1.004	0.653	0.427	0.375	—	—	—	439,000
	300	594	1.241	1.098	0.692	0.454	0.375	—	—	—	504,000
	320	671	1.310	1.189	0.730	0.482	0.375	—	—	—	573,400
	340	751	1.377	1.277	0.768	0.509	0.375	—	—	—	647,300
	360	835	1.433	1.362	0.804	0.536	0.375	—	—	—	725,700
	380	923	1.506	1.448	0.840	0.562	0.375	—	—	—	808,600
48	180	312	0.956	0.755	0.600	0.443	0.313	0.313	—	—	217,700
	200	376	1.055	0.832	0.664	0.487	0.317	0.313	—	—	268,800
	220	463	1.150	0.943	0.721	0.533	0.375	0.375	—	—	325,200
	240	543	1.243	1.063	0.776	0.579	0.375	0.375	—	—	387,000
	260	633	1.334	1.181	0.833	0.625	0.397	0.375	—	—	454,200
	280	729	1.423	1.295	0.889	0.669	0.424	0.375	—	—	526,800
	298	821	1.502	1.394	0.938	0.710	0.448	0.375	—	—	596,700
56	160	333	0.995	0.817	0.678	0.537	0.398	0.313	0.313	—	200,700
	180	412	1.119	0.912	0.760	0.599	0.443	0.313	0.313	—	254,000
	200	502	1.239	1.033	0.836	0.663	0.487	0.317	0.313	—	313,600
	220	615	1.351	1.175	0.908	0.727	0.532	0.375	0.375	—	379,400
	240	723	1.462	1.313	0.982	0.790	0.577	0.375	0.375	—	451,500
	247	764	1.500	1.361	1.007	0.812	0.592	0.379	0.375	—	478,300
64	160	423	1.139	0.957	0.820	0.677	0.537	0.398	0.313	0.313	229,300
	180	527	1.282	1.078	0.918	0.758	0.599	0.443	0.313	0.313	290,300
	200	646	1.423	1.242	1.007	0.841	0.662	0.487	0.317	0.313	358,400
	212	735	1.502	1.338	1.061	0.890	0.700	0.514	0.375	0.375	402,600

Table K.2a—Shell-Plate Thicknesses Based on the Variable-Design-Point Method (See 5.6.4) Using 2400-mm Courses and an Allowable Stress of 208 MPa for the Test Condition (SI)

Tank Des. Liq.Lvl. m	Tank Diameter m	Weight of Shell Mg	Shell Plate Thickness for Course, mm								Nominal Tank Volume m^3
			1	2	3	4	5	6	7	8	
12	75	298	20.26	15.36	11.38	10.00	10.00	—	—	—	53,000
	80	332	21.45	16.48	12.06	10.00	10.00	—	—	—	60,300
	85	369	22.63	18.07	12.65	10.00	10.00	—	—	—	68,100
	90	409	23.78	19.63	13.27	10.00	10.00	—	—	—	76,300
	100	493	26.03	22.64	14.51	10.00	10.00	—	—	—	94,200
	105	537	27.12	24.10	15.12	10.00	10.00	—	—	—	103,900
	110	585	28.20	25.52	15.72	10.37	10.00	—	—	—	114,000
	115	636	29.25	26.92	16.31	10.79	10.00	—	—	—	124,600
	120	688	30.29	28.30	16.88	11.22	10.00	—	—	—	135,700
14.4	65	316	21.55	16.99	13.52	10.00	10.00	10.00	—	—	47,800
	75	406	24.54	19.96	15.41	11.37	10.00	10.00	—	—	63,600
	80	456	26.01	21.86	16.27	12.09	10.00	10.00	—	—	72,400
	85	509	27.45	23.73	17.14	12.81	10.00	10.00	—	—	81,700
	90	565	28.87	25.55	18.02	13.52	10.00	10.00	—	—	91,600
	100	684	31.64	29.10	19.76	14.92	10.00	10.00	—	—	113,100
	105	747	33.00	30.81	20.61	15.62	10.00	10.00	—	—	124,700
	110	814	34.33	32.49	21.44	16.31	10.28	10.00	—	—	136,800
	115	885	35.65	34.18	22.26	17.01	10.68	10.00	—	—	149,600
	120	958	36.94	35.83	23.08	17.73	11.08	10.00	—	—	162,900
16.8	60	341	23.32	19.05	15.85	12.51	9.27	8.00	8.00	—	47,500
	65	410	25.27	20.53	17.13	13.50	10.00	10.00	10.00	—	55,700
	75	533	28.84	24.92	19.40	15.51	11.36	10.00	10.00	—	74,200
	80	601	30.58	27.09	20.53	16.50	12.07	10.00	10.00	—	84,400
	85	672	32.29	29.23	21.68	17.48	12.76	10.00	10.00	—	95,300
	90	747	33.98	31.33	22.82	18.46	13.46	10.00	10.00	—	106,900
	100	907	37.29	35.41	25.05	20.42	14.82	10.00	10.00	—	131,900
	105	992	38.91	37.39	26.14	21.46	15.48	10.00	10.00	—	145,500
	110	1083	40.51	39.36	27.23	22.64	16.11	10.30	10.00	—	159,700
	115	1179	42.08	41.28	28.33	23.79	16.74	10.72	10.00	—	174,500
	120	1278	43.63	43.14	29.44	24.94	17.36	11.14	10.00	—	190,000
19.2	60	433	26.71	22.34	19.19	15.83	12.52	9.27	8.00	8.00	54,300
	65	520	28.94	24.70	20.63	17.11	13.51	10.00	10.00	10.00	63,700
	75	679	33.16	29.77	23.42	19.67	15.47	11.36	10.00	10.00	84,800
	80	766	35.17	32.22	24.85	20.93	16.45	12.06	10.00	10.00	96,500
	85	858	37.15	34.64	26.25	22.18	17.41	12.77	10.00	10.00	109,000
	90	955	39.12	37.01	27.65	23.44	18.36	13.46	10.00	10.00	122,100
	100	1163	42.96	41.63	30.38	26.27	20.19	14.85	10.00	10.00	150,800
	101	1185	43.34	42.08	30.65	26.56	20.37	14.98	10.00	10.00	153,800

Table K.2b—Shell-Plate Thicknesses Based on the Variable-Design-Point Method (See 5.6.4) Using 96-in. Courses and an Allowable Stress of 30,000 lbf/in.^{2} for the Test Condition (USC)

Tank Des. Liq. Lvl. ft	Tank Diameter ft	Weight of Shell tons	Shell Plate Thickness for Course, in.								Nominal Tank Volume bbl
			1	2	3	4	5	6	7	8	
40	240	320	0.798	0.603	0.447	0.375	0.375	—	—	—	322,500
	260	365	0.856	0.651	0.482	0.375	0.375	—	—	—	378,500
	280	417	0.914	0.729	0.511	0.375	0.375	—	—	—	439,000
	300	472	0.971	0.806	0.541	0.375	0.375	—	—	—	504,000
	320	530	1.026	0.880	0.572	0.375	0.375	—	—	—	573,400
	340	594	1.08	0.952	0.602	0.395	0.375	—	—	—	647,300
	360	661	1.133	1.022	0.632	0.416	0.375	—	—	—	725,700
	380	731	1.185	1.090	0.660	0.437	0.375	—	—	—	800,600
	400	803	1.235	1.156	0.689	0.458	0.375	—	—	—	896,000
48	220	374	0.892	0.704	0.561	0.412	0.375	0.375	—	—	325,200
	240	436	0.966	0.773	0.608	0.446	0.375	0.375	—	—	387,000
	260	505	1.038	0.866	0.650	0.482	0.375	0.375	—	—	454,200
	280	579	1.109	0.958	0.692	0.517	0.375	0.375	—	—	526,800
	300	656	1.178	1.047	0.736	0.552	0.375	0.375	—	—	604,800
	320	739	1.247	1.135	0.778	0.587	0.375	0.375	—	—	688,100
	340	827	1.314	1.220	0.820	0.621	0.392	0.375	—	—	776,800
	360	921	1.379	1.302	0.862	0.655	0.412	0.375	—	—	870,900
	380	1019	1.444	1.383	0.902	0.688	0.433	0.375	—	—	970,300
	400	1121	1.507	1.462	0.942	0.721	0.452	0.375	—	—	1,075,200
56	200	400	0.953	0.778	0.648	0.511	0.378	0.313	0.313	—	313,600
	220	490	1.048	0.858	0.709	0.560	0.412	0.375	0.375	—	379,400
	240	575	1.135	0.968	0.764	0.609	0.446	0.375	0.375	—	451,500
	260	668	1.220	1.075	0.819	0.658	0.481	0.375	0.375	—	529,900
	280	766	1.305	1.180	0.876	0.706	0.515	0.375	0.375	—	614,600
	300	871	1.387	1.283	0.932	0.754	0.549	0.375	0.375	—	705,600
	320	981	1.469	1.383	0.987	0.801	0.583	0.375	0.375	—	802,800
	340	1100	1.549	1.481	1.041	0.849	0.616	0.393	0.375	—	906,300
	360	1225	1.627	1.577	1.094	0.895	0.649	0.413	0.375	—	1,016,000
	380	1358	1.705	1.671	1.148	0.951	0.679	0.434	0.375	—	1,132,000
	392	1441	1.750	1.726	1.180	0.986	0.698	0.446	0.375	—	1,204,700
64	200	508	1.092	0.913	10.784	0.647	120.511	0.378	0.313	0.313	358,400
	220	623	1.201	1.034	0.853	0.710	0.560	0.412	0.375	0.375	433,600
	240	734	1.304	1.159	0.922	0.772	0.608	0.447	0.375	0.375	516,000
	260	853	1.403	1.280	0.992	0.834	0.655	0.481	0.375	0.375	605,600
	280	981	1.501	1.399	1.061	0.896	0.703	0.516	0.375	0.375	702,400
	300	1116	1.597	1.515	1.129	0.957	0.749	0.550	0.375	0.375	806,400
	320	1259	1.692	1.629	1.196	1.017	0.796	0.584	0.375	0.375	917,500
	332	1350	1.748	1.696	1.236	1.059	0.822	0.604	0.384	0.375	987,600

Table K.3a—Shell-Plate Thicknesses Based on the Variable-Design-Point Method (See 5.6.4) Using 2400-mm Courses and an Allowable Stress of 236 MPa for the Test Condition (SI)

Tank Des. Liq. Lvl. m	Tank Diameter m	Weight of Shell Mg	Shell Plate Thickness for Course, mm								Nominal Tank Volume m^3
			1	2	3	4	5	6	7	8	
14.4	65	293	19.03	15.04	11.95	10.00	10.00	10.00	—	—	47,800
	75	368	21.76	17.19	13.70	10.05	10.00	10.00	—	—	63,600
	80	413	23.07	18.78	14.48	10.69	10.00	10.00	—	—	72,400
	85	460	24.36	20.45	15.24	11.33	10.00	10.00	—	—	81,700
	90	510	25.63	22.10	16.00	11.96	10.00	10.00	—	—	91,600
	100	617	28.12	25.30	17.56	13.21	10.00	10.00	—	—	113,100
	105	674	29.34	26.85	18.32	13.82	10.00	10.00	—	—	124,700
	110	733	30.54	28.37	19.07	14.44	10.00	10.00	—	—	136,800
	115	794	31.73	29.87	19.81	15.05	10.00	10.00	—	—	149,600
	120	856	32.89	31.34	20.54	15.66	10.00	10.00	—	—	162,900
16.8	60	308	20.56	16.86	14.00	11.08	8.21	8.00	8.00	—	47,500
	65	376	22.27	18.17	15.13	11.93	10.00	10.00	10.00	—	55,700
	75	480	25.56	21.48	17.24	13.70	10.05	10.00	10.00	—	74,200
	80	541	27.11	23.43	18.23	14.58	10.67	10.00	10.00	—	84,400
	85	604	28.64	25.35	19.23	15.45	11.29	10.00	10.00	—	95,300
	90	671	30.15	27.24	20.25	16.32	11.91	10.00	10.00	—	106,900
	100	815	33.12	30.92	22.24	18.04	13.12	10.00	10.00	—	131,900
	105	891	34.57	32.70	23.22	18.90	13.72	10.00	10.00	—	145,500
	110	970	36.01	34.46	24.19	19.77	14.31	10.00	10.00	—	159,700
	115	1053	37.42	36.19	25.15	20.80	14.87	10.00	10.00	—	174,500
	120	1139	38.82	37.92	26.11	21.83	15.43	10.00	10.00	—	190,000
19.2	60	389	23.54	19.76	16.94	13.98	11.08	8.21	8.00	8.00	54,300
	65	471	25.51	21.32	18.31	15.10	11.94	10.00	10.00	10.00	63,700
	75	609	29.37	25.79	20.78	17.37	13.67	10.05	10.00	10.00	84,800
	80	687	31.17	27.99	22.02	18.49	14.53	10.68	10.00	10.00	96,500
	85	769	32.94	30.16	23.27	19.60	15.39	11.30	10.00	10.00	109,000
	90	855	34.69	32.29	24.51	20.70	16.24	11.92	10.00	10.00	122,100
	100	1041	38.13	36.45	26.96	22.99	17.90	13.15	10.00	10.00	150,800
	105	1140	39.82	38.47	28.16	24.27	18.70	13.76	10.00	10.00	166,300
	110	1243	41.49	40.47	29.34	25.57	19.49	14.36	10.00	10.00	182,5000
	115	1351	43.14	42.45	30.55	26.85	20.27	14.97	10.00	10.00	199,400
	117	1395	43.80[a]	43.22	31.03	27.36	20.59	15.21	10.00	10.00	206,400

[a] Exceeds maximum allowed material thickness.

Table K.3b—Shell-Plate Thicknesses Based on the Variable-Design-Point Method (See 5.6.4) Using 96-in. Courses and an Allowable Stress of 34,300 lbf/in.^{2} for the Test Condition (USC)

Tank Des. Liq. Lvl. ft	Tank Diameter ft	Weight of Shell tons	Shell Plate Thickness for Course, in.								Nominal Tank Volume bbl
			1	2	3	4	5	6	7	8	
48	220	341	0.784	0.619	0.492	0.375	0.375	0.375	—	—	325,200
	240	394	0.850	0.670	0.534	0.393	0.375	0.375	—	—	387,000
	260	453	0.914	0.736	0.574	0.423	0.375	0.375	—	—	454,200
	280	519	0.977	0.818	0.611	0.454	0.375	0.375	—	—	526,800
	300	588	1.039	0.898	0.649	0.485	0.375	0.375	—	—	604,800
	320	662	1.100	0.977	0.687	0.515	0.375	0.375	—	—	688,100
	340	738	1.160	1.053	0.724	0.545	0.375	0.375	—	—	776,800
	360	819	1.218	1.127	0.761	0.575	0.375	0.375	—	—	870,900
	380	904	1.276	1.200	0.797	0.605	0.381	0.375	—	—	970,300
	400	994	1.333	1.271	0.832	0.634	0.399	0.375	—	—	1,075,200
56	200	358	0.834	0.684	0.568	0.449	0.333	0.313	0.313	—	313,600
	220	441	0.917	0.747	0.623	0.491	0.375	0.375	0.375	—	379,400
	240	514	0.998	0.825	0.674	0.534	0.393	0.375	0.375	—	451,500
	260	596	1.074	0.921	0.723	0.577	0.422	0.375	0.375	—	529,900
	280	684	1.149	1.015	0.771	0.620	0.453	0.375	0.375	—	614,600
	300	777	1.222	1.107	0.821	0.662	0.483	0.375	0.375	—	705,600
	320	875	1.295	1.197	0.869	0.703	0.512	0.375	0.375	—	802,800
	340	978	1.366	1.284	0.918	0.745	0.542	0.375	0.375	—	906,300
	360	1086	1.436	1.370	0.965	0.786	0.571	0.375	0.375	—	1,016,000
	380	1200	1.505	1.454	1.012	0.827	0.600	0.382	0.375	—	1,132,000
	400	1322	1.573	1.536	1.058	0.873	0.627	0.400	0.375	—	1,254,400
64	200	453	0.955	0.801	0.687	0.567	0.449	0.333	0.313	0.313	358,400
	220	556	1.051	0.884	0.752	0.622	0.491	0.375	0.375	0.375	433,600
	240	653	1.146	0.994	0.812	0.677	0.533	0.393	0.375	0.375	516,000
	260	759	1.235	1.102	0.872	0.731	0.575	0.423	0.375	0.375	605,600
	280	872	1.321	1.208	0.933	0.786	0.617	0.453	0.375	0.375	702,400
	300	992	1.406	1.311	0.994	0.839	0.658	0.483	0.375	0.375	806,400
	320	1119	1.490	1.413	1.053	0.893	0.699	0.513	0.375	0.375	917,500
	340	1252	1.573	1.512	1.112	0.946	0.740	0.543	0.375	0.375	1,035,700
	360	1394	1.655	1.610	1.170	1.007	0.779	0.572	0.375	0.375	1,161,200
	380	1543	1.735	1.705	1.228	1.071	0.817	0.601	0.382	0.375	1,293,800
	384	1574	1.751[a]	1.724	1.240	1.083	0.824	0.607	0.385	0.375	1,321,200

[a] Exceeds maximum allowed material thickness.

Annex L
(normative)

API Standard 650 Storage Tank Data Sheet

L.1 Introduction

L.1.1 Purpose

This Annex provides guidance to Purchasers (owners, engineering contractors, and other designated agents) and Manufacturers (fabricators and erectors) for the preparation and completion of the *Atmospheric Storage Tank Data Sheet* (hereafter referred to as the **Data Sheet**). The Data Sheet shall be prepared in conjunction with this standard such that comprehensive proposals (bids) may be made and subsequent contracts may be placed for the fabrication and erection of tanks.

L.1.2 Scope

This Annex explains information to be placed on the Data Sheet primarily by Purchasers for use by Manufacturers. However, some of the instructions apply to either the Purchaser or the Manufacturer, depending on which party assumes certain responsibilities.

L.2 Use of This Annex

L.2.1 Data Sheet Purpose

The Data Sheet (attached to this Annex) shall be part of a complete tank specification. The Data Sheet provides space for defining specific technical information such as geometry, design loads, materials, and appurtenances, as well as an outline sketch of the tank. The Data Sheet may be used as part of the Owner's permanent record describing the tank. Because some information on the Data Sheet may be determined by the Manufacturer, the Data Sheet may also be used to facilitate gathering of the complete design requirements. The floating roof section of the Data Sheet may be omitted if no floating roof is required for the tank.

L.2.2 Purchaser's Responsibility

The preparer(s) of the Data Sheet shall have tank design experience and shall ensure that the requirements are both accurate and complete. The Purchaser is primarily responsible for initiating and completing the Data Sheet.

L.2.3 Manufacturer's Responsibility

The Manufacturer shall complete the Data Sheet as required to describe the proposal and shall provide the relevant information required on all lines marked with an asterisk (*) that have not been provided by the Purchaser. The Data Sheet shall be submitted at various times during the project as described in W.1.2(2).

L.2.4 Text Legibility

All text placed on the Data Sheet shall be of size and quality to be readable and reproducible. Use additional sheets or extend the form electronically for more space or necessary additions.

L.3 Specific Instructions

L.3.1 Line-by-Line Instructions

Each place for data entry (numbered lines, boxes, table cells, etc.) on the Data Sheet shall be completed. In no case should a line be left blank. Marking “NA” (not applicable), “Later,” “TBD” (to be determined), or other such terminology can be used. The “Later” and “TBD” notations shall be edited to reflect subsequent decisions and as-built configurations (see W.1.2).

Use consistent units for all dimensions and other data on the Data Sheet. *Show appropriate units for every appropriate numerical entry.*

The following numbered items correspond to the numbered lines and numbered tables on the Data Sheet:

Heading:

Data Sheet Status: Typical entries include: For Quotation, Bid, For Design Review, For Design Revision, and As-Built. Revise to suit the status when submitted by the Purchaser or by the Manufacturer.

General:

- — Special Documentation Package Requirements: List any exceptions to the default requirements listed in Annex W.
- — Measurement Units to be used in API 650: Identify the set of units to be used when applying the rules in API 650.

1. Tank Manufacturer
   - — Manufacturer’s name.*
   - — Contract number*: Enter proposed or assigned number.
   - — Address*: Enter physical address, not a post office box.
   - — Manufacturer’s serial number for tank.*
   - — Year built.*
   - — Edition and Addendum of API 650 used for design and fabrication.*
2. Purchaser
   - — Purchaser’s name.
   - — Contract number or designation.
   - — Address: Enter physical address, not a post office box.
   - — Tank designation: For example, item number, equipment tag number, or other description.
3. Owner/Operator
   - — Owner/operator name.
   - — Location of facility where tank will be operated.

4. Tank Dimensions

— Size Limitations*: Specify size limitations only when exact dimensions are to be determined by the Manufacturer (e.g. maximum and minimum diameters, shell heights, overall heights, etc.).

— Tank Diameter*: Specify diameter and indicate ID, OD, or CL/BSC (centerline diameter of bottom shell course).

— Shell Height*: Specify the distance from the top surface of the bottom plate or annular ring to the upper edge of the cylindrical shell including top angle, if any.

— Maximum Capacity* and Net Working Capacity*:

— Criteria*: Method used to determine capacity of tank: An example would be *API 2350*.

5. Products Stored

— Liquid: Specify liquid(s) to be stored in the tank.

— Maximum Specific Gravity: Enter specific gravity of the stored liquid(s) at designated temperatures. Use greatest value of all products when tanks are to be designed for multiple products.

— Blanketing Gas: Specify blanketing gas in the space above the liquid.

— Vapor Pressure: Specify absolute vapor pressure at the maximum operating temperature. Use the largest value for tanks designed for multiple products.

— % Aromatic: Specify percentage by weight of aromatic hydrocarbons in tank. Refer to any supplemental specification for protecting the materials of construction, as applicable.

— Hydrogen Sulfide Service? (Yes/No): If “Yes,” a supplemental specification for material selection and hardness shall be required. See 5.3.4.

— Other Special Service Conditions: Include any conditions that may require further consideration. Consider thermal expansion or shock, cyclic vibratory fatigue, and issues or regulations concerning the product stored, e.g. chloride, caustic, amine, or ethanol corrosion, hydrogen blistering or embrittlement, oleum, sulfuric acid, or ammonia service, RCRA (Resource Conservation and Recovery Act), HON (Hazardous Organic National Emission Standard for Hazardous Air Pollutants), RMP (Clean Air Act Risk Management Plan), etc. Provide supplemental specifications as needed. See 5.3.3.

Design and Testing:

Purchaser to Review Design Prior to Ordering Materials: Indicate if the Manufacturer is free to order materials prior to Purchaser reviewing the design documents. Schedule may be affected. See W.1.3.

6. Applicable Annexes*: See 1.1.6. Annex E may be selected on Line 8 of the Data Sheet. If no Annexes are chosen, the basic design of this standard is intended.

7. Design Parameters

— Maximum Design Temperature: See 3.13 for definition. This differs from the operating temperature. For temperature limits, see 1.1.1, and Annex M and Annex S. If the roof design temperature is different than the

shell temperature, as in the case of an uninsulated roof on an insulated shell, then use Line 23 to specify the roof maximum design temperature.

— Design Metal Temperature*: Enter either lowest 1-day mean temperature plus 8 ºC (15 ºF) or a lower temperature as specified by the Purchaser if operating conditions and/or local atmospheric conditions control fracture toughness issues.

— Design Liquid Level*: See 5.6.3.2, C.3.1.1, and E.2.2.

— Design Pressure: Specify pressure and units in the vapor space.

— External Pressure: See 5.2.5.

— Pressure Combination Factor: This factor is a modifier for the design internal pressure when used in load combinations with other variable loads. Value equals normal operating pressure/design internal pressure or a minimum of 0.4. Manufacturer to use 0.4 when not specified.

— Maximum Fill Rate: Specify rate and units (e.g. 100 gallons per minute).

— Maximum Emptying Rate: Specify rate and units (e.g. 75 gallons per minute).

— Flotation Considerations (Yes/No): Include design consideration that advise the Manufacturer about tank flotation anchorage, bottom uplift, and partial submersion pressures arising out of flood or dike impoundment.

— Flotation Supplemental Specifications*: Refer to any that may describe external liquid depth, external fluid specific gravity, minimum internal liquid level, and any other information necessary for design.

— Section 5.2.4 makes the design criteria here a matter of agreement between the Purchaser and the Manufacturer.

— Applied Supplemental Load Specification: Refer to supplemental specifications that provide concentrated loads applied to the shell, such as openings or appurtenances from attached equipment, valves, or piping, or reactions from stairs and platforms for determination of strength and stiffness issues by the Manufacturer. If this information is not provided, the requirements of W.2(5) still apply.

- 8. Seismic Design Data

— Seismic Design? (Yes/No): Indicate whether design for earthquakes is required. The Purchaser may specify Annex E, or an alternate criterion.

— Annex E: Mark the box provided if this Annex shall be used for seismic design.

— Alternate Seismic Criteria: Refer to any supplemental criteria different from this standard that shall be followed. All required design factors shall be included in this supplemental specification.

— Seismic Use Group: See E.3.1.

— Site Class: See Table E.4-B.

— Vertical Seismic Design: Indicate if this design is required.

— Vertical Ground Motion Accelerator: Provide per E.6.1.3.

— Basis of Lateral Acceleration: Select one of the three methods listed, and specify the appropriate parameters. See E.4.

— Freeboard: For SUG I designs, indicate if freeboard is required. See E.7.2.

— Roof Tie Rods @ Outer Ring?* (Yes/No): See E.7.5

- 9. Design Wind Issues

— Top Wind Girder Style*: See 5.9, and Figure 5-24, for open-top and external floating roofs.

— Dimensions of Top Wind Girder*: For example, if style were “Curb Angle,” the dimension might be $3 \times 3 \times {}^{3}/_{8}$ (in.).

— Use Top Wind Girder as Walkway? (Yes/No): See 5.9, and Figure 5-25, and note 3 ft-6 in. dimension preference of 5.9.4 if choice is “Yes.”

— Intermediate Wind Girders* (Yes/No): Specify “Yes” whenever wind girders shall be added to the shell to satisfy shell stability stiffening predicated by wind loads. Specify “No” if shell stiffening is to be accomplished by increasing the shell thickness. If not specified by the Purchaser, the Manufacturer must select between the two alternatives and indicate the choice here.

— Intermediate Wind Girder Style*: See 5.9 and Figure 5-24, for all kinds of tanks whenever wind girders are specified.

— Dimensions of Intermediate Wind Girders*: For example, if style were “formed plate,” dimension might be b = 30 in. per Figure 5-24.

— Check Buckling in Corroded Condition? (Yes/No): If “Yes,” the wind load shall be applied to the corroded shell (an option covered in 5.9.7.1) to establish the adequacy of the thicknesses and/or stiffening rings to resist the applied forces.

- 10. Shell Design

— 1-Foot Method?* (Yes/No): The Purchaser may select this shell thickness design method. The method is subject to the applicable limitations noted in 5.6.3, A.4, J.3.3, and S.3.2. If not selected by the Purchaser, the Manufacturer may select either this design method or one of the other two methods that this standard lists, subject to the restrictions of this standard and the Purchaser’s approval.

— Variable-Design-Point Method?* (Yes/No/Alternate): The Purchaser may select this shell thickness design method. This method is subject to the restrictions detailed in 5.6.4. If the 1-Foot Method or Elastic Analysis Method is selected by the Purchaser and the Variable-Design-Point Method is also selected as an “Alternate” by the Purchaser, the Variable-Point Design Method may be used in addition to the Purchaser-selected method, but the resulting proposal must be clearly marked as an “Alternate.” If the method is not selected by the Purchaser, the Manufacturer may select either this design method or one of the other two methods that this standard lists, subject to the restrictions of this standard and the Purchaser’s approval.

— Elastic Analysis Method?* (Yes/No/Alternate): The Purchaser may select this shell thickness design method. This method is subject to the restrictions detailed in 5.6.5. Cases when this method is mandatory are named in 5.6.5 as well as requirements on the analysis boundary conditions. When it is not mandatory, the Purchaser may select this shell design method. If the 1-Foot or Variable-Design-Point Method is selected by the Purchaser and the Elastic Analysis Method is also selected as an “Alternate” by the Purchaser, the Elastic Analysis Method may be used in addition to the Purchaser-selected method, but the resulting proposal must be clearly marked as an “Alternate.” If the method is not selected by the Purchaser, the

Manufacturer may select either this design method or one of the other two methods that this standard lists, subject to the restrictions of this standard and the Purchaser's approval.

— Plate-Stacking Criteria* Centerline-Stacked? (Yes/No) or Flush-Stacked on the Inside or Outside? (Yes/No)?:

— Plate Widths (Shell Course Heights) and Thicknesses*: Specify nominal shell course heights and thicknesses. The first course is attached to the bottom.

— Joint Efficiency*: Specify in percentage. Applicable only to Annex A, Annex AL, Annex J, Annex S, and Annex X designs. Mark "NA" for all other designs.

— Shell-to-Bottom Weld Type*: See Figure 5-3A (inside and outside corner fillets), Figure 5-3C (inside and outside partial penetration corner welds with fillet weld reinforcement), and J.3.2.4 (full penetration butt weld to flanged flat bottom).

— Shell-to-Bottom Weld Examination Method*: Choose among the options listed in accordance with 7.2.4.

— Exceptions to Seal-welded Attachments (see Section 5.1.3.7): Specify where intermittent welding is permitted.

• 11. Open-Top and Fixed-Roof Data (see page 6 of the Data Sheet for Floating Roofs)

— Open Top?* (Yes/No) Specify "Yes" if tank has no fixed roof or has an external floating roof. Specify "No" for all other tanks.

NOTE The remaining entries in this line apply to fixed roofs ONLY:

— Fixed Roof Type*: Enter description, such as supported cone with internal structure, supported cone with external structure, structurally-supported aluminum geodesic dome, self-supporting cone, self-supporting dome, self-supporting umbrella, flanged only flat top, or other. See 5.10.1 or Annex G.

— Roof Support Columns*: Specify pipe or structural shape. If structural shape is specified, indicate the kind (e.g. wide flange, back-to-back channel, etc.).

COMMENT Pipe-type roof columns are preferred for internal floating roof tanks. In many cases the openings are $^{3}/_{4}$ NPT threaded couplings that allow the user to plug the openings when the tank is in service, to minimize corrosion of the supports and reduce emission from the tank. The openings are needed to allow the free drainage and cleaning of the columns when the tank is out of service.

— Cone Slope*: Specify rise to run as a dimensionless ratio, e.g. "$^{3}/_{4}$:12".

— Dome or Umbrella Radius*: See 5.10.6 for self-supporting approximate spherical radius of roof.

— Weld Joints*: Describe the type of roof plate weld joint, which may be lap joint, butt joint, or some combination thereof.

NOTE Annex F, Section F.7 roofs shall conform to API 620.

— Seal Weld Underside of Lap Joints? (Yes/No): May be required for roof plates with internal lining or to prevent crevice corrosion.

— Seal Weld Underside of Wind Girder Joints? (Yes/No): See 5.1.5.8.

— Gas-tight? (Yes/No): See 7.3.7.

— Joint Efficiency*: Use only for Annex F, Section F.7 roofs. See API 620, Table 3-2.

— Thickness*: Provide nominal thickness of roof plates.

— Snow-Load*: Purchaser to provide the snow load for non-U.S. Sites. For non-US sites, the Manufacturer should indicate the 50-year ground snow load selected. See 5.2.1e. For instructions on combining loads, see 5.10.2.1.

— Applied Supplemental Loads Specification*: Indicate supplementary specifications for both dead and live roof loads that are concentrated or have local distributions (e.g. the personnel loads of 5.8.6.2 and H.4.2.2). Specify any reactions from platforms or walking surfaces as well as loads applied by equipment, valves, and piping.

— Column Lateral Load: Purchaser may optionally specify lateral loads imposed upon roof-supporting columns in accordance with 5.10.2.9.

— Venting Devices*? Enter type and quantity of devices for normal venting per API Standard 2000, and pressure settings. Also, enter type(s) and quantity of emergency venting devices that meet either API Standard 2000, circulation venting per Annex H, or a frangible roof design per 5.10.2.6, as applicable. Also enter any special requirements for vents in areas where ice and snow may block vents. The frangibility of tanks less than 50 ft in diameter may require additional design considerations beyond those required by this standard.

— For Non-Frangible Roofs:

— Seal Weld Roof Plates to Top Angle on the Inside? (Yes/No): When “Yes” is selected, the shell-to-roof-joint shall be seal-welded on the inside. For certain designs, this may adversely affect frangibility.

— Weld Rafters to Roof Plates? (Yes/No):

— Roof-to-Shell Detail*: See Figures 5-3A and F-3, J.3.5, and API 620, Figure 3-6.

— Radial Projection of Horizontal Component to Top Angle*: Specify inward or outward projection.

• 12. Required Bottom Data

— Thickness*: Enter nominal thickness, including corrosion allowance.

— Style*: Enter one of the following: flat, cone up to center, cone down to center, side to side (tilted plane), cone down to off-center. Enter all sump requirements (number, size, location, etc.) in Data Sheet (Table 3, Line 23, or on the Tank Plan).

— Slope*: Enter rise versus run. For the off-center style above, the slope specified is the maximum slope.

— Weld Joint Type*: Enter one of the following: single-welded full-fillet lap joint, single-welded butt with backing strip that remains in place, double-welded butt without backing strip, double-welded full-fillet lap joints, or other, to be detailed on Data Sheet Line 23 if necessary.

— Provide Drip Ring (Yes/No): If required, a drip ring shall be provided per 3.4.5. Unless the following Alternate Specification is provided, the default drip ring shall be provided.

— Alternate Specification: Refer to an acceptable drip ring design specification if the Purchaser requires a drip ring but declines the default design of 5.4.5.

— Annular Ring* (Yes/No): The Purchaser may stipulate this type of detail even if not required by this standard. A Purchaser's choice of "No" does not relieve the Manufacturer from complying with the requirements of this standard in this regard.

— Annular Ring Minimum Radial Width* and Thickness*: Specify width and thickness.

• 13. Foundation Information

— Furnished by*: Indicate Purchaser, Manufacturer, or others.

— Type*: Indicate materials and form. See Annex B and Annex I (e.g. concrete ring-wall or steel wide flange grillage on concrete pile cap).

— Soil Allowable Bearing Pressure*: Estimate pressure from geotechnical report, experience with similar tanks in the same area, etc.

— Per Specification*: Refer to any specification that describes soil allowable bearing pressure.

— Anchor Size*: See 5.3.1.1 and 5.12. Provide materials of construction, geometric forms, and corrosion allowance for anchors in Table 2 of the Data Sheet.

— Anchor Quantity*: Indicate the total number of anchors or anchor bolts to be provided.

— Foundation Design Loads: See W.3(15). These loads are unfactored after the manner of the Allowable Stress Design methodology. (Sign convention is as follows: positive acting downward, negative acting upward.)

— Base Shear*: Indicate the values for the wind and seismic conditions in units of force.

— Overturning Moment*: Indicate in units of force-distance. See 5.11 for wind, and Annex E, or alternate seismic criteria as specified on Line 8 of the Data Sheet**,** for seismic criteria.

— Ring Forces*: Indicate loads delivered by the shell in units of force per circumference of shell.

NOTE 1 Note: The uniformly distributed loads are shell plus roof weight (both new and corroded), roof live load, internal pressure, and partial vacuum.

NOTE 2 Note: The non-uniform loads are the peak magnitudes of the longitudinal compressive distributed force derived from the wind and seismic-overturning moments without regard to any other compressive or tensile loads in the shell.

— Bottom Forces*: Indicate support loads that are the uniformly applied forces to the bottom away from the shell ring in units of force per unit area. These include weight of bottom plates, product and test liquid weights, and pressure/vacuum loads. Mark all inapplicable entities as "NA."

— Other Foundation Loads*: Provide an attachment to describe these loads such as lateral soil pressure, overburden, roof column reactions, pore pressure, uplift anchor forces, etc.

— Minimum Projection of Foundation Above Grade: Specify the minimum required projection of the foundation above grade, if any.

- 14. Pressure Test (See 7.3.5)

  — Responsibility for Heating Test Water, if Required: Select one.

  — Hydro-Test Fill Height*: See 7.3.5, F.4.4, and F.7.6.

  — Settlement Measurements (Yes/No): Purchaser may waive the measurement of foundation settlement during the hydro-test in accordance with 7.3.6.5.

  — Extended Duration of Hydro-Test: Provide the number of hours or days if the tank is to be kept full of water for an extended period.

  — Predicted Settlement Profile is Attached: Check if the Purchaser elects to inform the Manufacturer of relevant settlement predictions.

  — Responsibility for Setting Water Quality: Specify party responsible for setting water quality standards. Refer to supplemental specifications as required. For guidance, see 7.3.6.3.

  — Test Water Source and Disposal Tie-In Locations: Provide the location of the supply and disposal points for hydro-test water that the Manufacturer shall use.

  — Test Requirements for Annex J Tanks: Hydrostatic Testing (Yes/No): If “No” is selected, the Purchaser must specify the required Alternative Test from J.4.2.2.

  — Penetrant Testing Allowed in lieu of Hydro-Testing: Check if there is no means of providing test water at the tank site, e.g. very remote tank sites. See 7.3.5.

  — Post-Pressure-Test Activities Required of the Manufacturer: Select the activities desired according to 7.3.6.2(4).

- 15. Optional Fabrication, Erection, Inspection, and Testing Requirements

  — Inspection by: Designate Purchaser’s inspectors. See 7.3.1.1.

  — Supplemental NDE (Non Destructive Examination) Responsibility and Supplemental NDE Specifications: Specify NDE options (e.g. see 8.3.5) or indicate additional NDE options, such as weld hardness testing or additional radiographs. For possible additional responsibilities, see 7.3.2.3.

  — Positive Material Identification (Yes/No): Include criteria to be followed.

  — Maximum Permissible Plate Thickness for Shearing: Specify the thickest plate to be butt-welded that may be sheared in accordance with 6.1.2.

  — Must Welds not exceeding 6 mm ($^1/_4$ in.) or welds greater than 6 mm ($^1/_4$ in.) be Multi-Pass? (Yes/No): See 5.1.3.6

  — Leak Test Method*: Describe leak tests for each component. For example, see 7.3.3, 7.3.4, 7.3.5, 7.3.7, C.3.6, and H.6.2.

  — Modify or Waive API Dimensional Tolerances (see 7.5)? (No/Yes/Specify): If the API tolerances are not adequate, specify the required tolerances here.

— Specify Additional Tolerances, if any, and Circumferential and Vertical Measurement Locations: Indicate any supplemental tolerances for plumbness and roundness, giving the tolerance limit and the locations for the tolerance readings.

NOTE If Additional Radial Tolerance measurements are specified, radial tolerances measured higher than 0.3 m (1 ft) above the shell-to-bottom weld shall be three times the tolerances given in 7.5.3, unless specified otherwise by the Purchaser.

- 16. Coating Data

— Internal Linings by: Describe responsible party or indicate “Not Req’d.”

— Per Specification*: Refer to supplemental specifications to address the detailed coating/galvanizing requirements for items such as internal structural supports, inside surface of roof, bottom, piping flanges, stairs, platforms, ladders, underside of bottoms, and top surface of foundation. Ensure that all requirements address issues such as joint contour preparation (e.g. shell-to-bottom, sharp edges of laps, crevices, etc.) and reduced weld build-up or undercut. For guidance on internal bottom linings, see API 652.

— External Coating by: Describe responsible party or indicate “Not Req’d.”

— Per Specification*: Refer to any supplemental specification fully describing the process.

— Under-Bottom Coating by: Describe responsible party or indicate “Not Req’d.”

— Per Specification*: Refer to a supplemental specification fully describing the process.

- 17. Cathodic Protection

— Cathodic Protection System? (Yes/No): See API 651 for guidance.

— Per Specification*: Describe requirements and responsible parties.

- 18. Leak Detection System

— Leak Detection System? (Yes/No): Provide a passive leak detection system as described in Annex I. Active elements may be specified; however, the system must also provide leak detection by passive means. If active leak detection schemes (e.g. volumetric inventory records, mass change, acoustic emissions sensing, and tracer element detection) are required, describe the requirements by means of a specification herein.

— Per Specification*: Describe requirements and responsible parties.

- 19. Release Prevention Barrier (See Annex I, I.1.1, Note, for definition.)

— Release Prevention Barrier? (Yes/No): Examples of barriers are vault floors, double bottoms, and impermeable membranes.

— Per Specification*: Describe requirements and responsible parties.

- 20. Tank Measurement System

— Required? (Yes/No): Examples are float gauge, differential pressure level indicator, level alarm, radar, and level gauge.

— Remote Capability Required? (Yes/No): Indicate whether level measurements are required to be relayed to remote control stations.

--`,,```,,,,````-`-`,,`,,`,`,,`---

— By*: Designate the provider of the measurement system.

— Per Specification*: Refer to supplemental specification.

- 21. Tank Weights and Lifting Requirements

— Full of Water*: Indicate weight filled with water to design liquid level.

— Empty*: Indicate weight when empty. For specification of lift lugs, see Data Sheet, Line 28. For tanks that are to be lifted, rigging and handling instructions and temporary bracing may be required. Provide reference to a supplemental specification as required.

— Shipping*: Specify weight for Annex J tanks only.

— Brace/Lift Specification*: Refer to any supplemental bracing/lifting specifications.

- 22. References: Include relevant documents.

- 23. Remarks: Use this for issues not adequately covered elsewhere. Include any alternate shell opening designs specified by the Purchaser in accordance with 5.7, with reference to the alternate criteria (e.g. API Standard 620).

- **Table 1 Materials of Construction:**

List material specifications (e.g. CSA G40.21M-260W, ASTM A573-65, ISO 630 Gr E355-C, etc.), and supplied thickness of items in the left column only.

State corrosion allowance for each component. See 5.3.2. For internals, indicate if the corrosion allowance is to be applied to each exposed surface. Unless indicated otherwise, it applies to the total thickness specified. Show units of measure.

Any materials that either have received any heat treatment, such as normalizing, beyond the minimum heat-treating requirements of the material specification or have been qualified by impact tests shall be identified by reference to notes located under the “remarks” lines. The notes shall define the heat treatment received and/or the energy acceptance levels, test temperature, and specimen orientation for impact tests.

When thermal stress relief is applied to a part in accordance with the requirements of 5.7.4, the part shall be identified by a note under the “remarks” lines.

- **Table 2 Bolts and Anchors:**

Complete all bolting and anchorage information (see 4.7, 5.11.3, 5.12, E.6.2, E.7, F.7.4, and J.3.9), including head and nut shape and material specifications. Show units of measure for the corrosion allowance and see 5.3.2. Corrosion allowance may be marked “NA” for galvanized, special corrosion-resistant coated, or stainless steel anchor bolts.

- **Table 3 Nozzle and Manhole Schedule* (for Fixed Roof, Shell, and Bottom):**

Include nozzles (e.g. both blanked and piped-to connections), equipment and instrument attachment and access openings, sumps, inspection ports, and manholes in the fixed roof, shell and bottom.

The description of, and examples for, the information that may be specified in Table 3 is as follows:

Entry Field	Comments	Representative Example
Mark	Purchaser's mark or designation	Nozzle "A-1" in shell
Service	Stated service or purpose	Product Out
Size, NPS, or Diameter (in.)	Conventional size description of pipe and tube	NPS 24
Neck Schedule or Wall Thickness	Pipe schedule or wall thickness	Sch 40S
Reinf. Plate Dimensions	Circular, Diamond, etc.	49.5 in. OD × 0.188 in.
Full Pen. On Open. (Y/N)	See 5.7.2.2	Yes
Flange Type	Fabricated, S.O., WN, LJ, etc.	ASME B16.5 Lap Joint
Flange Class or Thickness	ASME, ANSI, API Standard 650 Table	Cl 150
Gasket Bearing Surface Dimension and Finish	Dimension and finish of bearing surface in contact with gasket	27.25 in. OD, 125 to 250 R_a μ-in.
Gasket Thickness and Dimension		0.125 in. × 24 in. ID × 28.25 in. OD
Gasket Material and Description	Generic, Brand, ANSI Std, etc.	Non-asbestos sheet, per Manufacturer
Proj. to FF or CL or from Datum Lines	See paragraph below	18" FF

ASME B16.47 flanges are not available in all sizes, materials, and flange types (see 5.7.6.1).

COMMENT Lap joint nozzle flanges should be avoided in connections where the combined stresses (such as bending, cyclic, and seismic) in the nozzle where attached to the lap joint stub-end exceed the API 650 basic allowable stress at the maximum design temperature. Lap joint nozzle flanges should also be avoided in connections with vibration or when susceptible to environmental stress corrosion cracking.

Nozzle projections shall be measured from the outside of the shell to the face of the shell flange (FF) and from datum line to the face of the flange for roof and floor openings, unless otherwise specified. Shell opening elevations shall be from the datum line to the centerline of the opening, unless otherwise specified. Roof opening locations shall be measured radially from the centerline of the tank. Specify datum line and elevations with orientations on the "Tank Plans and Sketch" of the Data Sheet.

For fabricated flanges requiring ASME *Boiler and Pressure Vessel Code,* Section VIII, Division 1, UG-34 and Annex 2 calculations, place the "m" and "y" values for the gasket in the "Remarks" section of the Data Sheet, Line 23. Clearly indicate to which gaskets these values apply.

Consider listing in Table 3, items such as:

— water draw-offs;

— thermowells (make, model, stem length);

— suction trough (size, reference drawing);

— couplings (number, size);

— sump;

— inspection hatches for observation of floating roofs (as specified on Line 34).

Some items require that supplemental information be supplied, such as reference drawings, model numbers, and other specifications. Provide any supplemental information on Line 23.

Other Tank Appurtenances:

- 24. Platform, Stairway and Railing: See 5.8.10 and C.3.14.6.

  — Galvanizing Required? (Yes/No)*: Examples are stairways, platforms, and handrails to be galvanized. Identify components in Remarks, Line 23. See S.2.1.3.

  — Stairway Style*: Specify whether straight along a radius or helical.

  — Walking Surface Type*: Describe type of walking surface on platform and stairs (e.g. diamond-checkered pattern plate, bar and rod grating, expanded metal grating, etc.).

  — Stairway and Walkway Clear Width*: See 5.9.4, Table 5.17, and Table 5.18.

  — National Safety Standards*: Indicate all standards that shall be observed for ladders, stairs, walkways, platforms, and other architectural/structural items (e.g. OSHA 1910).

  — Architectural/Structural Specification*: Provide details for alloys, shapes, fasteners, coating, etc.

  — Gauger's Platform Required? (Yes/No).

  — Quantity of Gauger's Platforms Required*.

  — Per Specification*: Refer to any supplemental specification, if gauger's platform specification differs from the architectural/structural reference specification above.

- 25. Jackets and Other Heaters or Coolers

  — Is a Jacket Required? (Yes/No)*: If Yes, a supplemental specification may be required to address some or all of the following items.

    a) Should the jacket be integral (utilize the shell as one boundary wall) or stand-alone (able to hold pressure when detached from shell).

    b) How should the jacket be attached to the shell? Specify whether welded, bolted, or otherwise attached.

    c) What type of jacket is required? Consider annular cylinder, pipe coil, half-pipe helix, panel coil, or other types to be described.

  — Are Other Heaters or Coolers Required? (Yes/No)*: If Yes, a supplemental specification may be required to address some or all of the following items.

    a) Specify the type of heater or cooler. For example, internal coils, bayonet heat exchangers, or below bottom piping.

    b) Provide specifications for any other heaters or coolers.

    c) Specify design pressures for jacket or heaters or coolers, both internal pressure and partial vacuum.

    d) Specify design temperatures for jackets and heaters/coolers.

- 26. Mixer/Agitator
    - — Quantity: Indicate number required.
    - — Size*:
    - — Per Specification*: Provide reference to supplemental specification.
- 27. Insulation Data
    - — Required? (Yes/No).
    - — Thickness*: Indicate thickness of insulation in inches.

    NOTE If not uniform for entire tank shell and roof, defer to Purchaser-supplied supplemental insulation specification.

    - — Material*: Designate material and density of insulation.
    - — Per Specifications*: Provide references to insulation and insulation support specifications.
    - — Responsibility for Insulation and Installation: Indicate Purchaser, Manufacturer, or others.
- 28. Structural Attachments
    - — Lift Lugs for Maintenance or Installation?* (Yes/No): Specify projection if insulation is required.
    - — Description*: Describe the type of lifting lugs required.
    - — Shell Anchorage?* (Yes/No): Wind or seismic loading may require anchorage. See 5.11, 5.12, and Annex E and Annex F.
    - — Type*: Specify type of shell anchorage (e.g. chairs, lugs, sleeves, rings, straps, etc.).
    - — Scaffold Cable Supports? (Yes/No): Indicate if required. See Figure 5.22.
- 29. Various Other Items
    - — Flush-Type Shell Connection and Flush-Type Cleanout Fitting: Mark the blocks indicating which type(s) is required. See Figure 5.12 and Figure 5.14.
    - — Waive Application of Annex P: Indicate if the Manufacturer is required to analyze nozzle loads in accordance with Annex P. It is not intended that this Annex necessarily be applied to piping connections similar in size and configuration to those on tanks of similar size and thickness for which satisfactory service experience is available. See Annex P for limitations.
    - — Enter miscellaneous items not found elsewhere on the Data Sheet.

- **Table 4 Other Tank Appurtenances Schedule*:**

Include all appurtenances not described elsewhere on the Data Sheet.

Consider listing in Table 4 such items as the following:

— ladders;

— overflow openings (number and size), see H.5.3;

— circulation vents (number and size), see H.5.2.2;

— pressure-vacuum relief valves (nominal size, model number, etc.);

— free vent/flame arrestor;

— grounding clips (quantity and style);

— inlet Diffusers (if Purchaser specified, include details or design criteria).

Some items require supplemental information, such as reference drawings, model numbers, and other specifications. Provide any supplemental information on Line 23.

- **Floating Roof Data:**

30. Floating Roof Selection

— Design Basis: Check which API Annex is to be applied?

— Type of Roof*: Specify the option listed in Annex C or H. Only the Purchaser may specify “Other” and describe another option.

- 31. Seals

— Primary Seal: Select from types listed, or specify “Other” and supply necessary details or reference specification. Foam seal material may absorb some products over time, becoming a potential safety issue. See C.3.13 and H.4.4.

— Shoe Mechanism: Indicate mechanism required for mechanical primary seal. Select the Manufacturer’s standard, or specify a particular type (e.g. pantograph, leaf spring, safety-pin spring, coil spring scissors, etc.).

— Electrically Isolate Mechanism from Shoes? (Yes/No): Indicate if required to insulate to prevent possible arcing.

— Wax Scrapers Required? (Yes/No): Such devices remove wax-like substances from the tank shell as the roof descends to provide a cleaner sealing surface.

— Nominal Shoe Thickness*: Include units. See C.3.13 and H.4.4.4.

— Carbon Steel Shoes to be Galvanized? (Yes/No): This option cannot be selected for stainless steel shoes.

— Secondary Seal: Indicate the need for a secondary seal.

— Supplementary Specification: Refer to supplementary specification for secondary rim seal.

- 32. Data for All Floating Roofs:

— Overflow Openings in Shell Acceptable? (Yes/No): See C.3.1.1.

— Shell Extension? (Yes/No): Select a windskirt per C.3.1.1. If Yes is selected, this may affect capacity, design liquid level, and the need for an overflow indicator (alarm), requiring a Purchaser-supplied supplemental specification under Line 20. See API 2350.

— Roof-Drain Check Valves Required? (Yes/No): See C.3.8.1.

— Roof-Drain Isolation Valves Required? (Yes/No): See C.3.8.1.

— Freeze Protection for Roof Drains Required? (Yes/No): See C.3.8.1. Freeze protection is not required in all climates.

— Roof-Drain Piping to External Nozzles: Select the type of piping from the blocks provided. If “Other” is selected, provide description or reference supplemental specification. The number of roof drains required and sump details shall be shown on the construction drawings.

— Foam Dam? (Yes/No): See C.3.15.2.

— Supplementary Specification: Provide supplementary foam dam specification reference.

— Nominal Deck Thickness*: Specify a nominal deck thickness greater than that stated in C.3.3.2. If not specified, the Manufacturer shall insert the thickness stated in the above reference.

— Bulkhead Top Edges to be Liquid-Tight? (Yes/No): See H.4.1.8. This is mandatory for external floating roofs but is a Purchaser’s option for internal floating roofs.

— Seal-Weld Underside of Roof?: Select “Yes” to provide increased corrosion protection or additional stiffness. This applies to seal welds in addition to the seal welding required in C.3.3.3 and H.4.3.5.

— Electrical Bonding: Indicate if either shunts or cables will be used to bond the roof electrically to the shell, and provide a supplemental specification to designate any technical requirements.

— Quantity of Non-Guide Pole Gauge Wells Required: See C.3.14.1(2), for manual gauging apparatus in wells not associated with a guide pole.

— Quantity of Sample Hatches Required: See C.3.15.3 for sample hatches without gauging apparatus.

— Guide Pole for Gauging? (Yes/No): Indicate whether the guide pole (anti-rotation device) shall be used for gauging.

— Slots in Guide Pole? (Yes/No): Indicate whether guide pole, if used for gauging, shall be slotted.

— Datum Plates? (Yes/No): Indicate if required. See C.3.14.4.

— Striking Plates? (Yes/No): Indicate if required. See C.3.14.5.

— Guide Pole Emissions-Limiting Devices: Indicate any required by regulation or any additional devices requested by the Purchaser for guide poles from the list provided. See C.3.14.1(1).

— Quantity of Roof Manholes*: See C.3.5, C.3.11, and H.5.5.

— Minimum Roof Clearances Above Bottom: Indicate elevations above the bottom to the landed floating roof for both the minimum operating level and the minimum maintenance level. These choices affect access and capacity. See C.3.10.3, H.4.6.2, and API 2350.

— Removable Leg Storage Racks? (Yes/No): Indicate if required.

— Leg Sleeves or Fixed Low Legs: Mark the block that specifies whether the leg-supported floating roof shall be provided with a sleeve through the roof plate or with fixed low legs.

• 33. Additional Data for External Floating Roofs (See Annex C):

— Weather Shield? (Yes/No): Indicate the need for a weather shield on external floating roofs. If secondary rim seals serve as weather shields, they shall not be additionally requested here.

— Supplementary Specification: Provide references for weather shield specifications.

— Rolling Ladder Required?* (Yes/No): Unless the Purchaser specifically declines here, a rolling ladder is to be provided in accordance with C.3.7.

— Must Each Leg be Field-Adjustable? (Yes/No): Indicate if required. If potential bottom settlement is an issue, the Purchaser has the option to require a two-position removable leg that can accommodate local adjustments that may differ for each leg. This option is for all floating roofs and is specifically discussed in C.3.10.3.

— Design Rainfall Intensity: Specify a rainfall rate, a minimum period of duration, and an association with a statistically occurring storm such as that found in Technical Report No. 40 (e.g. 0.5 in. per hour for 5 minutes for the 2-year storm).

— Design Accumulated 24-hour Rainfall: Specify height of water accumulated in 24 hours associated with a statistically occurring storm (e.g. 12 in. in 24 hours for the 100-year storm). See C.3.4 for minimum requirements.

— Distortion and Stability Determinations Required? (Yes/No): List option per C.3.4.2.

— Supplemental Specification: Document any established methodology chosen by agreement between the Purchaser and the Manufacturer.

— Landed Live Load*: See C.3.10.2. This space gives the Purchaser the option of specifying a larger live load for external floating roofs and for specifying the stated live load for internal floating roofs even if drains are provided that may normally negate the need for such live load design.

• 34. Additional Data for Internal Floating Roofs

— Two-Position Legs Required? (Yes/No): See H.4.6.2. If the two positions shall be field-adaptable to account for bottom settlement, indicate this in Line 23 of the Data Sheet.

— Cable-Supported Floating Roof? (Yes/No): Indicate if required. This is an internal floating roof option as found in H.4.6.5.

— Fixed-Roof Inspection Hatches Required? (Yes/No): Indicate number required for evaluation of condition of floating roof without having to enter the vapor space. See H.5.5.3.

— Internal Roof Drain Required? (Yes/No): See H.4.1.10

— Omit Distribution Pads Supporting Uniform Live Loads? (Yes/No): See H.4.6.6

— Corrosion Gauge Required? (Yes/No): See H.5.8.

— Fixed Ladder Required? (Yes/No): This applies to vertical ladders attached to the shell, which will also require a manhole in the fixed roof to be specified in Table 3.

— Modified Minimum Point Load? (Yes/No): Point or concentrated loads are stated in H.4.2.2 for internal floating roofs, but may be waived for tanks 9 m (30 ft) or smaller in diameter.

— Mfr. to Leak Test Compartments: Indicate the percentage of compartments to be tested by the Manufacturer and the location of the tests. If unknown prior to the Purchaser doing a field inspection, special contract terms may be required to cover the additional costs.

— Roof Erector's Flotation Test: Indicate when this test is to be performed: See H.6.5, H.6.6 for restrictions on these options.

— Flotation Test Media: Indicate the media to be used and the water quality. See H.6.6. Provide a separate specification, if required, to stipulate requirements.

— Flotation Test Duration, Fill Height,: See H.6.6.

— Flotation Test Items provided by Purchaser: List any items being supplied including those (gaskets, fasteners, test blanks, etc.) after the test is completed. See H.6.6.

— Responsible Party for Conducting Flotation Test and Inspecting Roof during Test: Purchaser can delegate these. See H.6.6.

- **Table 5 Floating Roof Materials:**

According to C.3.1.2, the application of corrosion allowances (C.A.) shall be a matter of agreement between the Purchaser and the Manufacturer. Document this agreement on the Data Sheet "Remarks" Line 23 (e.g. "Manufacturer affirms that the nominal thicknesses chosen for floating roof components include the corrosion allowances shown in the Table for Floating Roof Materials on page 7 of the Data Sheet").

• L.3.2 Tank Plan and Sketches (Page 8 and Supplements)

L.3.2.1 General

Page 8 of the Data Sheet shall be used to show the shell and roof appurtenance orientations. A single sheet is normally adequate for this purpose; however additional sheets may be necessary to show special details or configurations. All sheets shall be identified and sequenced as part of the Data Sheet. Sketches may be made with CAD or manual drafting. All sheets shall be identified by revision date or other means of record change.

NOTE Consider the prevailing wind direction when locating equipment requiring personnel access.

L.3.2.2 Sketch Views

The sketch view shall include an orthographic "Plan View" that may be used for the orientation of shell, roof, and bottom openings. Other views may be added.

L.3.2.3 Drafting Practices for Data Sheet Sketches

Drafting practices shall be consistent with the following items.

— Where practicable, sketches shall be to scale, but the scale need not be shown on the sketches.

— Bottom views are not allowed.

— Plant north or geographic north arrow shall point upward on the sketch.

— Plant north or geographic north shall be at the “0 degrees” orientation, as applicable.

— Component thicknesses need not be shown on the sketch.

— Internal details shall be identified and located. Provide only enough information to describe the item, or provide reference to standard details. These items shall also be itemized in the appropriate tables in the Data Sheet.

— External appurtenances may be omitted from the sketch; however they must be itemized in the appropriate tables in the Data Sheet.

— Foundation or anchorage details not clearly defined elsewhere shall be shown in the Data Sheet. This may require that an “Elevation View” be provided.

API	API Std 650 Storage Tank Data Sheet	Data Sheet Status: _____ Page 1 of 8

* For boxes marked with *, if blank, Mfr. shall determine and submit as per Appendix L. For all lines, see Appendix L for line-by-line instructions.

GENERAL Special Documentation Package Requirements: _____

Measurement Units to be used in API Std 650: SI ❑ US Customary ❑

1. Manufacturer* _____ Contract No.* _____
   Address* _____
   Mfg. Serial No.* _____ Year Built* _____ Edition & Addendum to *API 650** _____
2. Purchaser _____ Contract No. _____
   Address _____
   Tank Designation _____
3. Owner/Operator _____ Location _____
4. Size Limitations* _____ Tank Diameter* _____ Shell Height* _____
   Capacity: Maximum* _____ Net Working* _____ Criteria:* _____
5. Products Stored:
   Liquid _____ Max. S.G.: _____ at _____ °__
   Blanketing Gas_____ Vapor Pressure _____ PSIA at Max. Operating Temp.
   % Aromatic _____ Suppl. Spec. _____ H_2S Service? Yes ❑ No ❑ Suppl. Spec. _____
   Other Special Service Conditions? Yes ❑ No ❑ Suppl. Specs._____

DESIGN AND TESTING Purchaser to Review Design Prior to Ordering Material? Yes ❑ No ❑

6. Applicable API Standard 650 Appendices:* A ❑ B ❑ C ❑ F ❑ G ❑ H ❑ I ❑ J ❑ L ❑ M ❑ O ❑ P ❑ S ❑ U ❑ V ❑ W ❑
7. Max. Design. Temp. _____°__ Design Metal Temp.* _____°__ Design Liquid Level* _____
   Design Pressure _____ External Pressure _____ Pressure Combination Factor _____
   Maximum Fill Rate _____ Maximum Emptying Rate _____
   Flotation Considerations? Yes ❑ No ❑ Flot. Suppl. Spec:* _____ Applied Supplemental Load Spec._____
8. Seismic Design? Yes ❑ No ❑ Appendix E ❑ Alternate Seismic Criteria _____ Seismic Use Group _____
   MBE Site Class _____ Vertical Seismic Design? Yes ❑ No ❑ Vertical Ground Motion Accelerator A_V: _____
   Basis of Lateral Acceleration (Select one): ❑ Mapped Seismic Parameters? S_s ____S_1 ____ S_0 ____; ❑ Site-Specific Procedures?: MCE
   Design Required? Yes ❑ No ❑; ❑ Other (Non-ASCE) Methods _____
   ❑ Freeboard Required for SUG I Design Roof Tie Rods @ Outer Ring?* Yes ❑ No ❑
9. Wind Velocity for non-U.S. sites, 50-yr wind speed (3-sec Gust)* _____
   Top Wind Girder Style* _____ Dimensions* _____ Use Top Wind Girder as Walkway? Yes ❑ No ❑
   Intermediate Wind Girders?* Yes ❑ No ❑ Intermediate Wind Girder Style* _____ Dimensions*_____
   Check Buckling in Corroded Cond.? Yes ❑ No ❑
10. Shell Design: 1-Ft Mthd?* Yes ❑ No ❑ ; Variable-Des-Pt Mthd?* Yes ❑ No ❑ Alternate ❑; Elastic Anal. Mthd?* Yes ❑ No ❑ Alternate
    Plate Stacking Criteria* Centerline-Stacked? Yes ❑ No ❑ Flush-Stacked? Yes ❑ No ❑ Inside ❑ Outside ❑
    Plate Widths (Shell course heights) and Thicknesses * Numbers below Indicate Course Number.
    1. _____ 2. _____ 3. _____ 4. _____ 5. _____
    6. _____ 7. _____ 8. _____ 9. _____ 10. _____
    11. _____ 12. _____ 13. _____ 14. _____ 15. _____
    Joint Efficiency* _____% Shell-to-Bottom Weld Type* _____ Shell-to-Bottom Weld Exam Mthd* _____
    Exceptions to Seal-welded Attachments (see Section 5.1.3.7): _____

Approvals:	Revisions:	Title:
		By: Ck'd: Date:
		Drawing No.: Sheet ___ of ___

API	API Std 650 Storage Tank Data Sheet	Page 2 of 8

* If box is blank, Manufacturer shall determine and submit as per Appendix L.

11. Open-Top and Fixed Roofs: (See Sheet 6 for Floating Roofs) Open Top? * Yes ❑ No ❑

Fixed Roof Type* _____ Roof Support Columns*: Pipe ❑ Or Structural Shape ❑ _____

Cone Slope* _____. Dome or Umbrella Radius* _____ Weld Joints* _____
(Lap, Butt, Other)

Seal Weld Underside of: Lap-Joints? Yes ❑ No ❑; Seal Weld Underside of Wind Girder Joints? Yes ❑ No ❑

Gas-tight? Yes ❑ No ❑ Joint Efficiency* _____%

Thickness* _____In. Snow Load * _____ App. Suppl. Load Spec.* _____ Column Lateral Load _____

Normal Venting Devices*_____ Emergency Venting Devices* _____

Free Vents in Areas Where Snow and Ice May Block Vent* _____

For Non-Frangible Roofs: Seal Weld Roof Plates to Top Angle on the Inside? Yes ❑ No ❑ ; Weld rafters to Roof Plates Yes ❑ No ❑

Roof-to-Shell Detail* _____ Radial Projection of Horizontal Component of Top Angle* Inward ❑ Outward ❑

12. Bottom: Thickness* _____ Style* _____ Slope* _____. Weld Joint Type* _____

Provide Drip Ring? Yes ❑ No ❑ Alternate Spec. _____

Annular Ring? Yes ❑ No ❑ Annular Ring: Minimum Radial Width* _____ Thickness* _____

13. Foundation: Furnished by*_____ Type* _____
Soil Allow. Bearing Pressure* _____ Per Spec.* _____ Anchors: Size* _____ Qty* _____
Foundation Design Loads: Base Shear Force: Wind* _____ Seismic* _____ Overturning Moment: Wind* _____ Seismic* _____\
Ring Forces: Weight of Shell + Roof New* _____ Corroded* _____ Roof Live Load* _____ Internal Pressure* _____
Partial Vacuum* _____ Wind* _____ Seismic* _____
Bottom Forces: Floor Wt. New* _____ Corroded* _____ Product Wt.* _____ Water Wt.* _____ Internal Pressure* _____
Partial Vacuum* _____ Other Foundation Loads* _____ Min. Projection of Fdn. Above Grade: _____

14. Responsibility for Heating Water, if Required: Purchaser ❑ Manufacturer ❑

Hydro-Test Fill Height* _____ Settlement Measurements Required? Yes ❑ No ❑ Extended Duration of Hydro-Test:_____

❑ Predicted Settlement Profile is Attached

Responsibility for Setting Water Quality: Purchaser ❑ Manufacturer ❑ Supplemental Test Water Quality Spec. _____

Test Water Source & Disposal Tie-In Locations _____ Hydro-Test Appendix J Tank? Yes ❑ No ❑

Post-Pressure-Test Activities Required of the Manufacturer: Broom Clean ❑ Potable Water Rinse ❑ Dry Interior ❑

Other ❑ _____

15. Inspection by _____ in Shop; _____ in Field

Supplemental NDE Responsibility _____ Supplemental NDE Spec. _____
(Purch., Mfg., Other)

Positive Material Identification? Yes ❑ No ❑ PMI Requirements:_____
Max. Plate Thickness for Shearing _____
Must Welds not exceeding 6 mm ($^1/_4$ in.) Be Multi-Pass? Yes ❑ No ❑ Must Welds greater than 6 mm ($^1/_4$ in.) Be Multi-Pass? Yes ❑ No ❑

Leak Test Mthd: Roof* _____ Shell* _____ Shell Noz./Manhole Reinf. Plt.* _____
Bottom* _____ Floating Roof Components* _____

Modify or Waive API Dimensional Tolerances (see 7.5)? No ❑ Yes ❑ Specify: _____
Specify Additional Tolerances, if any, and Circumferential and Vertical Measurement Locations:

- Allowable Plumbness: _____ Measure and Record at a Minimum of ____ Locations or Every ____ m (ft) around the Tank, at the Following Shell Heights: (select one box): ❑ $^1/_3$ H, $^2/_3$ H and H ❑ Top of Each Shell Course ❑ Other: _____
- Allowable Roundness: **_____ Measure Radius and Record at a Minimum of _____ Locations or Every _____ m (ft) around the Tank, at the Following Shell Heights (select one box):

❑ Top of Tank, H ❑ $^1/_3$ H, $^2/_3$ H and H ❑ Top of Each Shell Course ❑ Other: _____

**See Data Sheet Instructions for the Maximum Allowable Additional Radial Tolerance.

Approvals:	Revisions:	Title:
		By: Ck'd: Date:
		Drawing No.: Sheet of

API	API Std 650 Storage Tank Data Sheet	Page 3 of 8

16. Coatings:
    Internal Coatings by: _____ Per Spec.* _____
    (Not Req'd., Others, Tank Mfg.)
    External Coating by: _____ Per Spec.* _____
    (Not Req'd., Others, Tank Mfg.)
    Under-Bottom Coating by: _____ Per Spec.* _____
    (Not Req'd., Others, Tank Mfg.)
17. Cathodic Protection System? Yes ❑ No ❑ Per Spec.* _____
18. Leak Detection System? Yes ❑ No ❑ Per Spec.* _____
19. Release Prevention Barrier? Yes ❑ No ❑ Per Spec.* _____
20. Tank Measurement System: Required? Yes ❑ No ❑ Remote Capability Required? Yes ❑ No ❑
    By:* _____ Per Spec.* _____
21. Weight of Tank: Full of Water* _____ Empty* _____ Shipping* _____ Brace/Lift Spec.* _____
22. References*: *API Std 650, Appendix L*
    _____
    _____
23. Remarks*:

Approvals:	Revisions:	Title:
		By: Ck'd: Date:
		Drawing No.: Sheet ___ of ___

API	API Std 650 Storage Tank Data Sheet	Page 4 of 8

* If box is blank, Manufacturer shall determine and submit as per Appendix L.

TABLE 1 MATERIALS OF CONSTRUCTION

Component	Material*/Thickness*	C.A.	Component	Material*	C.A.
Shell, Course __ to __			Reinforcing Pads		
Shell, Course __ to __			Manhole/Nozzle Necks		
Shell, Course __ to __			Manhole/Nozzle Flanges		
Shell, Course __ to __			Flange Covers		
Shell, Course __ to __			Anchor Attachments		
Roof			Submerged Piping		
Bottom			Wetted Structurals		+
Annular Ring			Non-wetted Structurals		+

+ Check here if C.A. is to apply to each exposed surface ❑.

TABLE 2 BOLTS AND ANCHORS

Component	Head Type*	Bolt or Anchor Material*	Nut Material*	Thread Series*	C.A.
Flange Bolting					++
Structural Bolting					++
Anchor Bolts					++

++ Total C.A., on the nominal diameter.

TABLE 3 NOZZLE AND MANHOLE SCHEDULE* (for Fixed Roof, Shell, and Bottom)

Mark	Service	Size, NPS, or Dia. (In.)	Neck Sch or Wall Thick.	Reinf. Plate Dimensions	Full Pen. On Open. (Y/N)	Flange Type	Flange Class or Thick.	Gasket Bearing Surf. Dimen. and Finish	Gasket Thick. and Dimen.	Gasket Mat'l. and Descript.	Proj. to FF or CL or from Datum Lines

Approvals:	Revisions:	Title:		
		By:	Ck'd:	Date:
		Drawing No.:	Sheet ___ of ___	

API	API Std 650 Storage Tank Data Sheet	Page 5 of 8

* If box is blank, Manufacturer shall determine and submit as per Appendix L.

OTHER TANK APPURTENANCES

24. Platform, Stairway, and Railing: Galvanizing Req'd?* Yes ❑ No ❑ Stairway Style* _____Walk Surf. Type* _____
(Straight or Helical)

Stair and Walkway Clear Width* _____ National Safety Standards*_____

Architectural/Structural Specification* _____

Gauger's Platform Req'd? Yes ❑ No ❑ Qty Req'd.* _____ Per Spec. *_____

25. Jacket Required?* Yes ❑ No ❑ Other Heaters/Coolers Required?* Yes ❑ No ❑

Supplemental Jacket, Heater, or Cooler Specifications* _____

26. Mixer/Agitator: Quantity _____ Size* _____ Per Spec.* _____

27. Insulation: Required? Yes ❑ No ❑ Thickness* _____ Material* _____

Per Specs*_____ Responsibility for Insulation and Installation _____
(Purchaser, Manufacturer, Others)

28. Structural Attachments: Lift Lugs?* Yes ❑ No ❑ Desc.*_____

Shell Anchorage?* Yes ❑ No ❑ Type* _____Scaffold Cable Support? Yes ❑ No ❑

29. Various Other Items: Welded Flush-Type: Shell Connection ❑ Cleanout Fitting ❑ Waive Application of Appendix P? Yes ❑ No ❑

Miscellany #1 _____ Miscellany #2 _____

Miscellany #3 _____ Miscellany #4 _____

Miscellany #5 _____ Miscellany #6 _____

TABLE 4 OTHER TANK APPURTENANCES*

Mark	Quantity	Service or Description	Size	Orientation	Height from Datum	Material	Remarks

Approvals:	Revisions:	Title:
		By: Ck'd: Date:
		Drawing No.: Sheet ___ of ___

API	API Std 650 Storage Tank Data Sheet	Page 6 of 8

* If box is blank, Manufacturer shall determine and submit as per Appendix L.

FLOATING ROOF DATA

30. **Floating Roof Selection**

Design Basis: Appendix C ❑ Or Appendix H ❑

Type of Roof: (External or Internal): Single Deck Pontoon* ❑ Double Deck* ❑

(Internal Only): Tubular Pontoon* ❑ Metallic Sandwich Panel* ❑

Other ❑ _____ Supplemental Spec.:_____

31. **Seals**

Primary Seal: Shoe ❑ Envelope ❑ Wiper/Compression Plate ❑ Other ❑ _____ Supplemental Spec: _____

Shoe Mechanism: Mfg. Std. ❑ Other ❑ _____

Electrically Isolate Mechanism from Shoes? Yes ❑ No ❑ Wax Scrapers Required? Yes ❑ No ❑

Minimum Shoe Thickness* _____ Carbon Steel Shoes to be Galvanized? Yes ❑ No ❑

Secondary Seal: Shoe ❑ Envelope ❑ Wiper ❑ None ❑ Other ❑ _____ Supplemental Spec: _____

32. **Data for All Floating Roofs:**

Overflow Openings in Shell Acceptable? Yes ❑ No ❑ Shell Extension? Yes ❑ No ❑

Roof-Drain Check Valves Required? Yes ❑ No ❑ Roof-Drain Isolation Valves Required? Yes ❑ No ❑

Freeze Protection for Roof Drains Required? No ❑ Yes ❑ Supplemental Requirements: _____

Roof-Drain Piping to External Nozzles: Mfg. Std. ❑ Armored Flexible Pipe ❑ Swivels in Rigid Pipe ❑ Other ❑ _____

Foam Dam? Yes ❑ No ❑ Supplemental Spec. _____

Minimum Deck Thickness* _____

Bulkhead Top Edges to be Liquid-Tight? Yes ❑ No ❑ Seal-weld Underside of Roof? Yes ❑ No ❑

Electrical Bonding: Shunts: Yes ❑ No ❑ Cables: Yes ❑ No ❑ Supplemental Spec. _____

Qty of Non-Guide-Pole Gauge Wells Required _____ Qty of Sample Hatches Required _____

Guide Pole for Gauging? Yes ❑ No ❑ Slots in Guide Pole? Yes ❑ No ❑ Datum Plates? Yes ❑ No ❑ Striking Plates? Yes ❑ No ❑

Guide Pole Emissions-Limiting Devices: Sliding Cover ❑ Pole Wiper ❑ Pole Sleeve ❑ Float ❑ Float Wiper ❑ Pole Cap ❑

Qty. of Roof Manholes* _____ Minimum High-Roof Clearance Above Bottom: _____

Removable Leg Storage Racks? Yes ❑ No ❑ ; Leg Sleeves ❑ or Fixed Low Legs ❑

33. **Additional Data for External Floating Roofs:**

Weather Shield? Yes ❑ No ❑ Suppl. Spec. _____

Rolling Ladder Req'd? Yes ❑ No ❑ Field Adjustable Legs? Yes ❑ No ❑

Design Rainfall Intensity _____In./Hr. (mm/hr) Based on a _____ Minute Duration Associated with the _____ Storm

Design Accumulated 24-Hour Rainfall _____In. (mm) Based on the _____ Storm

Distortion and Stability Determinations Required? Yes ❑ No ❑ Supplemental Specification _____

Landed Live Load* _____

Approvals:	Revisions:	Title:		
		By:	Ck'd:	Date:
		Drawing No.:	Sheet ___ of ___	

API	API Std 650 Storage Tank Data Sheet	Page 7 of 8

34. **Additional Data for Internal Floating Roofs:**

Two-Position Legs? Yes ❑ No ❑ Cable-Supported Roof? Yes ❑ No ❑ Fixed-Roof Inspection Hatches Required?: Yes ❑ No ❑

Internal Roof Drain Required? Yes ❑ No ❑ Omit Distribution Pads Supporting Uniform Live Loads? Yes ❑ No ❑

Corrosion Gauge Required? Yes ❑ No ❑ Fixed Ladder Required?: Yes ❑ No ❑ ; Type of Roof Vent: *_____

Modified Minimum Point Load? Yes ❑ No ❑ Supplemental Specification _____

Mfr. to Leak Test * ___ % of Compartments ❑ in Assembly Yard ❑ in Erected Position ❑ Unknown; see separate contract terms

Roof Erector's Flotation Test: w/ tank hydro ❑ at completion of roof ❑ at later date ❑ _____ Not required ❑

Flotation Test Media: Water ❑ Product ❑ (see H.6.6.1) Water Quality: Potable ❑ Other ❑ See Supplemental Spec _____

Flotation Test: Duration _____ Fill Height: _____

Flotation Test Items provided by Purchaser (see H.6.7): None ❑ List Attached ❑

Responsible Party for Inspecting Roof during Initial Fill: Purchaser ❑ Other ❑ _____

TABLE 5 FLOATING ROOF MATERIALS

Component	Material*/Thickness*	C.A./Coating*	Component	Material*/Thickness*	C.A./Coating*
Deck Plate			Datum Plate		
Inner Rim Plate			Tubular Pontoon		
Outer Rim Plate			Pontoon Bulkhead		
Foam Dam			Submerged Pipe		
Sandwich Panel Face Plate			Guide Pole		
Sandwich Panel Core			Secondary Seal		
Gauge Well			Secondary Seal Fabric		
Drain Sumps			Wiper Tip		
Opening Sleeves			Wax Scraper		
Floating Suction Lines			Weather Seal		
Primary Fabric Seal			Envelope Fabric		
Foam Log Core			Shoe Mechanisms		
Landing Legs			Primary Seal Shoe		
Landing Leg Bottom Pads			Removable Covers		
Manhole Necks			Rolling Ladder		
Vents			Inlet Diffusers		

Approvals:	Revisions:	Title:		
		By:	Ck'd:	Date:
		Drawing No.:	Sheet ___ of ___	

API	API Std 650 Storage Tank Data Sheet	Page 8 of 8

* If box is blank, Manufacturer shall determine and submit as per Appendix L.

Tank Plan and Sketches:

Notes:

Approvals:	Revisions:	Title:		
		By:	Ck'd:	Date:
		Drawing No.:	Sheet ___ of ___	

Table L.1—Index of Decisions or Actions Which may be Required of the Tank Purchaser

Foreword
1.1.2
1.1.3
1.1.5
1.1.6
1.1.11
Table 1-1 (App. C, E, G, I, L, O, P, V, W)
1.1.15
1.1.18
1.1.22
1.1.28
1.3.2
1.3.3
1.4
4.1.1.4
4.1.2
4.1.3
4.1.5 (b)
4.2.1.3
4.2.5
Table 4-1 (Note 1)
Table 4-2 (Note C)
4.2.7.4
4.2.8.1
4.2.9.2
4.2.10.4
4.4.1 (g)
4.4.2
4.6.2
4.7
4.9.1.1
4.9.1.4
4.9.1.5
4.9.2
4.9.3.1
5.1.3.6.1
5.1.3.8
5.1.5.3 (b)
5.1.5.4
5.1.5.5
5.1.5.8 (b)
5.1.5.9 (e)
5.2.1 (a, b, f, g, h, j, 1)
5.2.2
5.2.3 (a, b, c)
5.2.4
5.2.6.1
5.3.1.1
5.3.2.1
5.3.2.3
5.3.2.6
5.3.3
5.3.4
5.4.1
5.4.4
5.4.5
5.6.1.1 (Notes 1, 3)
5.6.1.2
Tables 5-2a and 5-2b (Note a)
5.6.3.2 (*H*, *G*, *CA*)
5.6.4.1
5.6.4.6 (*H*)
5.7.1.4
5.7.1.8
Figure 5-6 (Note 5)
Figure 5-7A (Notes 1, 7)
Figure 5-7B (Note 6)
Figure 5-8 (Note 4)
5.7.2.2
5.7.2.3 (b)
Tables 5-6a and 5-6b (Note c)
Tables 5-8a and 5-8b (Note d)
Tables 5-9a and 5-9b (Note c)
Figure 5-12 (Note 4)
5.7.3.4
5.7.4.5
5.7.5.2
5.7.6.1.a
5.7.6.1.b
5.7.6.2
5.7.6.3
5.7.7.1
5.7.8.1
5.8.2
5.8.5.3
5.8.5.4
5.8.7
5.8.10 (c)
5.8.11.2
5.8.11.3
5.9.3.3
5.9.6.1 (Note)
5.9.7.1 (*t*, d)
5.9.7.2 ($t_{uniform}$, t_{actual})
5.9.7.7
5.10.2.2
5.10.2.4
5.10.2.6
5.10.2.7
5.10.2.8
5.10.3.1
5.10.3.4
5.10.4.1
5.10.4.4
5.10.4.5
5.10.5
5.10.6
5.12.5
5.12.6
5.12.10

6.1.1.1
6.1.2 (Note)
6.1.3
6.2.1
6.2.3
6.2.4
7.1.1
7.1.4
7.2.1.1
7.2.1.7
7.2.3.3
7.2.4.1
7.2.4.3
7.3.1.3
7.3.2.1
7.3.2.3
7.3.5, 1
7.3.6.2 (2, 3, 4, 5, 7)
7.3.6.3
7.3.6.5 (Note)
7.3.7.2
7.4.1
7.4.4
7.5.1
8.1.2.7
8.1.4
8.1.6
8.1.7.2
8.1.8.2
8.3.2.5
8.6.3
8.6.10
8.6.11
9.2.1.1
10.1.1 (e, f, g, j, k)
Figure 10-1 (Note)
10.3 (Note)
A.1.1
A.1.2
A.3.4
A.4.1 (*G*, *CA*)
A.6
A.8.2
A.9.2
B.3.3
B.3.4
B.4.4.1
C.1
C.3.1.1
C.3.1.2
C.3.1.5
C.3.3.2
C.3.4.1 (b)
C.3.4.2
C.3.5
C.3.7
C.3.8.1 (1, 3)
C.3.8.2
C.3.8.3
C.3.10.1
C.3.10.3 (b)
C.3.10.4
C.3.10.8
C.3.10.9
C.3.12.3
C.3.13.2
C.3.13.5 (Primary, Secondary Seal)
C.3.14.1 (1)
C.3.14.2
C.3.14.4
C.3.14.5
C.3.14.6
C.3.15.2
C.3.15.3
C.3.15.4 (a, e)
E.1
E.3.1
E.4.1
E.4.2
E.4.2.4
E.4.4
E.4.6.1
E.4.6.2
E.5.1.2
E.6.1.3
E.6.1.5
E.6.1.6
E.6.2.1.2
E.7.2
E.7.5
F.5.1
F.7.4
G.1.3.2
G.1.3.3
G.1.4.1
G.1.4.2
G.1.4.4
G.2.1
G.2.4
G.4.3
G.5.3
G.6.2
G.7
G.8.3
G.9
G.10.1.1
G.10.1.2
G.11.3
H.1.1
H.1.2
H.1.3
H.2.2 (f, g, h)
H.3

H.4.1.6
H.4.1.7
H.4.1.8
H.4.1.9
H.4.1.10
H.4.2.1.1
H.4.2.1.3
H.4.2.2
H.4.2.3.2
H.4.3.3
H.4.3.3.1
H.4.3.4
H.4.3.5
H.4.4
H.4.4.2
H.4.4.4
H.4.6.1
H.4.6.2
H.4.6.3
H.4.6.5
H.4.6.6
H.4.6.7
H.4.6.8
H.4.6.9
H.5.1.1
H.5.1.4
H.5.2.1
H.5.2.2.1
H.5.2.2.3
H.5.3.1
H.5.3.2
H.5.3.3
H.5.5.3
H.5.6
H.5.7
H.5.8
H.5.9
H.6.1
H.6.2
H.6.4 (Note)
H.6.6
H.6.6.1
I.1.2
I.1.3
I.2 (c)
I.5.5
I.6.2
I.6.3
I.6.4
I.7.1
I.7.3.2 (*CA*)
I.7.6
J.1.2
J.3.6.2
J.3.7.1
J.3.7.2
J.3.8.2
J.4.2.2
Annex L
M.1.2 (Note)
M.2
M.4.2 (*C*)
N.2.1
N.2.2
N.2.4
N.2.5
N.2.6
O.2.2
O.2.6
O.3.1.4
P.1
P.2.1
P.2.2
P.2.8.1
P.2.8.2
R.2
S.1.2
Table S-1a and S-1b (Notes 1, 2, 3, 5)
S.2.1.2
S.2.2
S.3.1
S.3.2 (*G*, *CA*)
S.4.3.2
S.4.4.3
S.4.5.1
Tables S-2a and S-2b (Notes 2, 3)
Tables S-3a and S-3b (Note 4)
S.4.9.2
S.4.10.2 (a, f)
S.4.10.3
S.4.13
S.6 (a)
U.3.1
U.3.3
U.3.5
U.4.3
Annex V
Annex W

Annex M
(normative)

Requirements for Tanks Operating at Elevated Temperatures

M.1 Scope

M.1.1 This Annex specifies additional requirements for API Standard 650 tanks with a maximum design temperature exceeding 93 °C (200 °F) but not exceeding 260 °C (500 °F).

M.1.2 The following shall not be used for a maximum design temperature above 93 °C (200 °F):

a) Open-top tanks (see 5.9).

b) Floating-roof tanks (see Annex C).

c) Structurally-supported aluminum dome roofs (see G.1.1 and note below).

d) Internal floating roofs constructed of aluminum (see H.2.2 and note below).

e) Internal floating roofs constructed of composite material (see H.2.2). Lower temperature limits may apply for this roof material type.

NOTE An exception may be made by the Purchaser for Items c and d, if the following criteria are met:

a) Allowable stress reductions for aluminum alloys are determined in accordance with Annex AL, and alloys are evaluated for the potential of exfoliation.

b) Gaskets and seals are evaluated for suitability at the maximum design temperature.

M.1.3 Internal floating roofs in accordance with Annex H may be used for a maximum design temperature above 93 °C (200 °F), subject to the applicable requirements of this Annex. The vapor pressure of the liquid must be considered. Sealing devices, particularly those of fabric and nonmetallic materials, shall be suitable for the maximum design temperature.

M.1.4 Tanks for small internal pressures in accordance with Annex F may be used for a maximum design temperature above 93 °C (200 °F), subject to the requirements of M.3.6, M.3.7, and M.3.8.

M.1.5 Shop-assembled tanks in accordance with Annex J may be used for a maximum design temperature above 93 °C (200 °F), subject to the applicable requirements of this Annex.

M.1.6 The nameplate of the tank shall indicate that the tank is in accordance with this Annex by the addition of M to the information required by 10.1.1. In addition, the nameplate shall be marked with the maximum design temperature in the space indicated in Figure 10.1.

M.2 Thermal Effects

This Annex does not provide detailed rules for limiting loadings and strains resulting from thermal effects, such as differential thermal expansion and thermal cycling, that may exist in some tanks operating at elevated temperatures. Where significant thermal effects will be present, it is the intent of this Annex that the Purchaser define such effects. The Manufacturer shall propose, subject to the Purchaser's acceptance, details that will provide strength and utility equivalent to those provided by the details specified by this standard in the absence of such effects.

For a maximum design temperature above 93 °C (200 °F), particular consideration should be given to the following thermal effects.

a) Temperature differences between the tank bottom and the lower portion of the shell. Such thermal differences may result from factors such as the method and sequence of filling and heating or cooling, the degree of internal circulation, and heat losses to the foundation and from the shell to the atmosphere. With such temperature differences, it may be necessary to provide for increased piping flexibility, an improved bottom-to-shell joint, and a thicker annular ring or bottom sketch plates to compensate for increased rotation of the bottom-to-shell joint (see M.4.2).

b) The ability of the bottom to expand thermally, which may be limited by the method of filling and heating. With such a condition, it may be necessary to provide improved bottom welding in addition to the details suggested in Item a.

c) Temperature differences or gradients between members, such as the shell and the roof or stairways, the shell and stiffeners, the roof or shell and the roof supports, and locations with insulation discontinuities.

d) Whether or not the contents are allowed to solidify and are later reheated to a liquid, including the effect on columns, beams, and rafters. The possible build-up of solids on these components and the potential for plugging of the vent system should also be considered.

e) The number and magnitude of temperature cycles the tank is expected to undergo during its design life.

M.3 Modifications in Stress and Thickness

M.3.1 For a maximum design temperature not exceeding 93 °C (200 °F), the allowable stress specified in 5.6.2 (see Table 5.2a and Table 5.2b) for calculating shell thickness need not be modified.

M.3.2 For a maximum design temperature exceeding 93 °C (200 °F), the allowable stress specified in 5.6.2 shall be modified as follows: The allowable stress shall be two-thirds the minimum specified yield strength of the material multiplied by the applicable reduction factor given in Table M-1a and Table M-1b or the value given in Table 5.2a and Table 5.2b for product design stress, whichever is less.

M.3.3 For operating temperatures exceeding 93 °C (200 °F), the yield strength F_y in 5.10.4.4 shall be multiplied by the applicable reduction factor given in Table M.1a and Table M.1b.

M.3.4 The allowable stress of 145 MPa (21,000 lbf/in^2) in the equation for shell-plate thickness in A.4.1 shall be multiplied by the applicable reduction factor given in Table M.1a and Table M.1b.

M.3.5 The requirements of 5.7.5 for shell manholes, 5.7.7 for flush-type cleanout fittings and of 5.7.8 for flush-type shell connections shall be modified. The thickness of bottom reinforcing plate for flush-type shell cleanouts and flush-type shell connections and bolting flange and cover plates for shell manhole and flush-type shell cleanouts shall be multiplied by the ratio of 205 MPa (30,000 lbf/in.^{2}) to the material yield strength at the maximum design temperature if the ratio is greater than one.

M.3.6 The structural allowable stresses specified in 5.10.3, including the allowable stresses dependent on the modulus of elasticity, shall be multiplied by the yield strength reduction factors from Table M-1a and Table M-1b at the maximum design temperature.

M.3.7 If the anchors are insulated, the allowable stresses specified in Table 5.21a, Table 5.21b, and Table 5.22a and Table 5.22b shall be multiplied by the ratio of the material's yield strength at the maximum design temperature to 205 MPa (30,000 lbf/in.^{2}) if the ratio is less than 1.0 (see Tables M.1a and M.1b for yield strength reduction factors).

Table M.1a—Yield Strength Reduction Factors (SI)

Temperature (°C)	Minimum Specified Yield Strength (MPa)		
	< 310 MPa	From ≥ 310 to < 380 MPa	≥ 380 MPa
94	0.91	0.88	0.92
150	0.88	0.81	0.87
200	0.85	0.75	0.83
260	0.80	0.70	0.79
NOTE Linear interpolation shall be applied for intermediate values.			

Table M.1b—Yield Strength Reduction Factors (USC)

Temperature (°F)	Minimum Specified Yield Strength (lbf/in.^{2})		
	< 45,000 lbf/in.^{2}	≥ 45,000 to < 55,000 lbf/in.^{2}	≥ 55,000 lbf/in.^{2}
201	0.91	0.88	0.92
300	0.88	0.81	0.87
400	0.85	0.75	0.83
500	0.80	0.70	0.79
NOTE Linear interpolation shall be applied for intermediate values.			

M.4 Tank Bottoms

M.4.1 Tanks with diameters exceeding 30 m (100 ft) shall have butt-welded annular bottom plates (see 5.1.5.6).

M.4.2 The following simplified procedure is offered as a recommended design practice for elevated-temperature tanks where significant temperature differences between the tank bottom and the lowest shell course are expected. The use of the procedure is not intended to be mandatory. It is recognized that other analytical procedures can be employed as well as that operating conditions may preclude the need for such a procedure.

Shell-to-bottom junctions in elevated-temperature tanks may be evaluated for liquid head and temperature cycles with the formulas, procedures, and exclusions given below. (See Conditions a and b in the note below, which exclude tanks from such analyses.)

NOTE A cyclic design life evaluation need not be made if all the criteria of either of the following conditions are met.

a) The design temperature difference (T) is less than or equal to 220 °C (400 °F), K is less than or equal to 2.0, and C is less than or equal to 0.5.

b) A heated liquid head, in feet, greater than or equal to $0.3(Dt)^{0.5}$ is normally maintained in the tank, except for an occasional cool-down (about once a year) to ambient temperatures; T is less than or equal to 260 °C (500 °F); and K is less than or equal to 4.0. (For background information on the development of the stress formulas, design life criteria, and C and B factors, see G.G. Karcher, “Stresses at the Shell-to-Bottom Junction of Elevated-Temperature Tanks.”)

In SI units:

$$N = \left(\frac{9.7 \times 10^3}{KS}\right)^{2.44}$$

(If N is greater than or equal to 1300, cycling at the shell-to-bottom junction is not a controlling factor.)

where

N is the number of design liquid level and temperature cycles estimated for the tank design life (usually less than 1300). This design procedure contains a conservative safety margin. It is not necessary to monitor actual in-service temperature and liquid head cycles;

K is the stress concentration factor for the bottom plate at the toe of the inside shell-to-bottom fillet weld:

= 4.0 for shell-to-bottom fillet welds and lap-welded bottom plates;

= 2.0 for butt-welded annular plates where the shell-to-bottom fillet welds have been examined by 100% magnetic particle examination (see 8.2). This magnetic particle examination shall be performed on the root pass at every 13 mm of deposited weld metal while the weld is being made and on the completed weld. The examination shall be performed before hydrostatic testing:

$$S = \frac{0.028D^2 t_b^{0.25}}{t} \times \left[\frac{58HG}{(Dt)^{0.5}} + \frac{26.2CTt^{0.5}}{D^{1.5}} - \frac{4.8BS_y t_b^2}{(Dt)^{1.5}} - G\right]$$

= one-half the maximum stress range that occurs in the annular plate at the shell-to-bottom junction weld, in MPa. The H and CT terms must be large enough to cause a positive S. A negative S indicates that loading conditions are not sufficient to satisfy the development assumptions of this formula. Specifically stated, the following inequality must be satisfied when the equation for S is used:

$$\left[\frac{58HG}{(Dt)^{0.5}} + \frac{26.2CTt^{0.5}}{D^{1.5}} - G\right] > \frac{4.8BS_y t_b^2}{(Dt)^{1.5}}$$

When the equation for S is used, the shell thickness t must be greater than or equal to the annular-plate thickness tb;

T is the difference between the minimum ambient temperature and the maximum design temperature, in °C;

S_y is the specified minimum yield strength of the bottom plate at the maximum design temperature, in MPa;

D is the nominal tank diameter, in m)

H is the difference in filling height between the full level and the low level, in m;

G is the design specific gravity of the liquid;

t is the nominal thickness of the tank's bottom shell course, in mm;

t_b is the nominal thickness of the annular bottom plate, in mm;

C is the factor to account for radial restraint of the tank's shell-to-bottom junction with respect to free thermal expansion (C_{max} = 1.0; C_{min} = 0.25). The actual design value of C shall be established considering the tank's operating and warm-up procedure and heat transfer to the subgrade [31]:

= 0.85 if no C factor is specified by the Purchaser;

B is the foundation factor [29]:

= 2.0 for tanks on earth foundations;

= 4.0 for tanks on earth foundations with a concrete ringwall.

In USC units:

$$N = \left(\frac{1.4 \times 10^6}{KS}\right)^{2.44}$$

(If N is greater than or equal to 1300, cycling at the shell-to-bottom junction is not a controlling factor.)

where

N is the number of design liquid level and temperature cycles estimated for the tank design life (usually less than 1300). This design procedure contains a conservative safety margin. It is not necessary to monitor actual in-service temperature and liquid head cycles;

K is the stress concentration factor for the bottom plate at the toe of the inside shell-to-bottom fillet weld:

= 4.0 for shell-to-bottom fillet welds and lap-welded bottom plates;

= 2.0 for butt-welded annular plates where the shell-to-bottom fillet welds have been examined by 100 % magnetic particle examination (see 8.2). This magnetic particle examination shall be performed on the root pass at every $^1/_2$ in. of deposited weld metal while the weld is being made and on the completed weld. The examination shall be performed before hydrostatic testing:

$$S = \frac{0.033 D^2 t_b^{0.25}}{t} \times \left[\frac{6.3HG}{(Dt)^{0.5}} + \frac{436CTt^{0.5}}{D^{1.5}} - \frac{BS_y t_b^2}{(Dt)^{1.5}} - G\right]$$

= one-half the maximum stress range that occurs in the annular plate at the shell-to-bottom junction weld, in pounds per square inch. The H and CT terms must be large enough to cause a positive S. A negative S indicates that loading conditions are not sufficient to satisfy the development assumptions of this formula. Specifically stated, the following inequality must be satisfied when the equation for S is used:

$$\left[\frac{6.3HG}{(Dt)^{0.5}} + \frac{436CTt^{0.5}}{D^{1.5}} - G\right] > \frac{BS_y t_b^2}{(Dt)^{1.5}}$$

When the equation for S is used, the shell thickness t must be greater than or equal to the annular-plate thickness tb;

[31] G. G. Karcher, "Stresses at the Shell-to-Bottom Junction of Elevated-Temperature Tanks," *1981 Proceedings—Refining Department*, Volume 60, American Petroleum Institute, Washington D.C. 1981, pp. 154 – 159.

T is the difference between the minimum ambient temperature and the maximum design temperature, in °F;

S_y is the specified minimum yield strength of the bottom plate at the maximum design temperature, in lbf/in.^{2};

D is the nominal tank diameter, in ft;

H is the difference in filling height between the full level and the low level, in ft;

G is the design specific gravity of the liquid;

t is the nominal thickness of the tank's bottom shell course, in inches;

t_b is the nominal thickness of the annular bottom plate, in inches;

C is the factor to account for radial restraint of the tank's shell-to-bottom junction with respect to free thermal expansion (C_{max} = 1.0; C_{min} = 0.25). The actual design value of C shall be established considering the tank's operating and warm-up procedure and heat transfer to the subgrade [29]:

= 0.85 if no C factor is specified by the Purchaser;

B is the foundation factor [29]:

= 2.0 for tanks on earth foundations;

= 4.0 for tanks on earth foundations with a concrete ringwall.

M.5 Self-Supporting Roofs

M.5.1 The requirements of 5.10.5 and 5.10.6, which are applicable to self-supporting roofs, shall be modified. For a maximum design temperature above 93 °C (200 °F), the calculated nominal thickness of roof plates, as defined in 5.10.5 and 5.10.6, shall be increased by the ratio of 199,000 MPa (28,800,000 lbf/in.^{2}) to the material's modulus of elasticity at the maximum design temperature.

M.5.2 Table M-2a and Table M-2b shall be used to determine the material's modulus of elasticity at the maximum operating temperature.

M.6 Wind Girders

In the equation for the maximum height of unstiffened shell in 5.9.7.1, the maximum height (H_1) shall be reduced by the ratio of the material's modulus of elasticity at the maximum design temperature to 199,000 MPa (28,800,000 lbf/in.^{2}) when the ratio is less than 1.0 (see Table M.2a and Table M.2b for modulus of elasticity values).

Table M.2a—Modulus of Elasticity at the Maximum Design Temperature (SI)

Maximum Design Temperature	Modulus of Elasticity
°C	MPa
93	199,000
150	195,000
200	191,000
260	188,000
NOTE Linear interpolation shall be applied for intermediate values.	

Table M.2b—Modulus of Elasticity at the Maximum Design Temperature (USC)

Maximum Design Temperature	Modulus of Elasticity
°F	lbf/in.^{2}
200	28,800,000
300	28,300,000
400	27,700,000
500	27,300,000
NOTE Linear interpolation shall be applied for intermediate values.	

Annex N
(normative)

Use of New Materials That Are Not Identified

N.1 General

New or unused plates and seamless or welded pipe that are not completely identified as complying with any listed specification may be used in the construction of tanks covered by this standard, under the conditions specified in N.2.

N.2 Conditions

- **N.2.1** A material may be used if an authentic test record for each heat or heat-treating lot of material is available that proves that the material has chemical requirements and mechanical properties within the permissible range of a specification listed in this standard. If the test requirements of the listed specification are more restrictive than any specification or authentic tests that have been reported for the material, more restrictive tests shall be performed in accordance with the requirements of the listed specification, and the results shall be submitted to the Purchaser for approval.

- **N.2.2** If an authentic test record is not available or if all the material cannot be positively identified with the test record by legible stamping or marking, the following requirements apply.

  a) Each plate shall be subjected to the chemical analysis and physical tests required by the designated specification, with the following modifications: The carbon and manganese contents shall be determined in all check analyses. When the designated specification does not specify carbon and manganese limits, the Purchaser shall decide whether these contents are acceptable. When the direction of rolling is not definitely known, two tension specimens shall be taken at right angles to each other from a corner of each plate, and one tension specimen shall meet the specification requirements.

  b) Each length of pipe shall be subjected to a chemical check analysis and sufficient physical tests to satisfy the Purchaser that all of the material is properly identified with a given heat or heat-treatment lot and that the chemical and physical requirements of the designated specification are met. Material specified as suitable for welding, cold bending, close coiling, and the like shall be given sufficient check tests to satisfy the Purchaser that each length of material is suitable for the fabrication procedure to be used.

  N.2.3 Charpy V-notch impact tests must be performed when required by Figure 4.1 to verify that the material possesses the toughness required by Table 4.4a and Table 4.4b.

- **N.2.4** After a material is properly identified with a designated specification and the Purchaser is satisfied that the material complies with the specification in all respects, the testing agency shall stencil or otherwise mark, as permitted by the specification, a serial *S* number on each plate or each length of pipe (or as alternatively provided for small sizes in the specification) in the presence of the Purchaser.

- **N.2.5** Suitable report forms clearly marked “Report on Tests of Nonidentified Materials” shall be furnished by the tank Manufacturer or testing agency. The forms shall be properly filled out, certified by the testing agency, and approved by the Purchaser.

- **N.2.6** The Purchaser shall have the right to accept or reject the testing agency or the test results.

  N.2.7 The requirements for fabrication applicable to the designated specification to which the nonidentified material corresponds shall be followed, and the allowable design stress values shall be those specified in this standard for the corresponding specification.

--`,,```,,,,``````-`-,,,,,,,,`````-`-,,,-`-,,`,,`,`,,`---

Annex O
(informative)

Recommendations for Under-Bottom Connections

This annex provides a number of design options requiring decisions by the Purchaser; standard requirements; recommendations; and information that supplements the basic standard. This annex becomes a requirement only when the Purchaser specifies an option covered by this annex or specifies the entire annex.

O.1 Scope

This Annex contains recommendations to be used for the design and construction of under-bottom connections for storage tanks. The recommendations are offered to outline good practice and to point out certain precautions that are to be observed. Reference should be made to Annex B for considerations involving foundation and subgrade.

O.2 Recommendations

O.2.1 The recommendations of this Annex are intended for use only where significant foundation settlement is not expected. It is not possible to establish precise limits, but if predicted settlement exceeds 13 mm ($^1/_2$ in.), the recommendations should be subjected to detailed engineering review for possible additions, modifications, or elimination of bottom connections. Particular consideration shall be given to possible differential settlement in the immediate area of the bottom connection and with respect to connecting piping.

- **O.2.2** The arrangement and details of bottom connections may be varied to achieve the utility, tightness, and strength required for the prevailing foundation conditions. The details shown in Figure O.1, Figure O.2, and Figure O.3 are examples. Figure O.1 and Figure O.2 show details used on a concrete ringwall foundation, but similar designs may be used on earth foundations. Figure O.3 shows another detail used on earth foundations. Other arrangements of foundation and connection (including combination sump and pipe) may be used under the provisions of O.2.6. When required by the Purchaser, seismic considerations (see Annex E) shall be included.

O.2.3 Support of the pipe by the soil and bottom connection shall be evaluated to confirm adequacy and resistance to liquid, static, and dynamic loads. Both deflection and stress shall be considered in the evaluation.

O.2.4 Consideration shall be given to predicted settlement that would affect the relative positions of the tank and pipe or pipe supports outside the tank (see O.2.1).

O.2.5 Bottom connections used in floating-roof tanks shall be provided with a baffle to prevent impingement of the inlet product stream directly against the floating roof.

- **O.2.6** All details are subject to agreement between the Purchaser and the Manufacturer.

O.3 Guideline Examples

O.3.1 Concrete Vault and Ringwall (See Figure O.1 and Figure O.2)

O.3.1.1 The concrete ceiling vault shown in Figure O.2 provides improved support of the tank bottom and shell and provides more uniform reinforcing-bar distribution around the ringwall opening than the details shown in Figure O.1 provide.

O.3.1.2 Particular attention is required for the backfill specifications and placement of the backfill around the vault area and around the inside of the entire ringwall. Compaction shall be adequate to prevent significant localized settlement.

O.3.1.3 Consideration should be given to the soil characteristics at the different elevations at the bottom of the ringwall and the vault, especially for the deeper vaults to accommodate the larger connections.

O.3.1.4 Recommended details and dimensions are shown in Figure O.1 and Figure O.2, and Table O.1a and Table O.1b. Dimension K is considered adequate to place the connection out of the influence of shell-to-bottom rotation when the tank is statically loaded. Seismic loading shall be analyzed for additional considerations. The method shall be a matter of agreement between the Manufacturer and the Purchaser. When the tank bottom has annular plates (thicker than the tank bottom), it is recommended either to provide at least 300 mm (12 in.) between the edge of the pipe connection or reinforcing plate and the inner edge of the annular plate or to locally extend the annular plate, thickened if necessary, to encompass the bottom connection. The dimensions in Tables O.1a and O.1b may be changed to achieve desired clearances for installations, inspections, and the like.

Table O.1a—Dimensions of Under-Bottom Connections (SI)

Inlet Diameter NPS *D*	mm										
	B/2	*E*	*F*	*G*	*H*	*J*	*K*	*L*	*W/2*	*T*[a]	*ST*[b]
6	525	225	350	750	575	300	1125	1975	925	16	ST4WF8.5
8	550	250	400	825	650	300	1150	2050	950	16	ST4WF8.5
12	600	300	450	875	750	300	1200	2150	1000	16	ST6WF13.5
18	675	375	500	950	900	300	1300	2325	1075	16	ST6WF13.5
24	750	450	600	1050	1075	300	1400	2550	1150	16	ST6WF13.5
30	850	525	750	1150	1300	300	1500	2750	1225	16	ST6WF13.5
36	925	625	925	1275	1550	300	1625	3000	1300	16	ST8WF18.0
42	1000	700	1075	1375	1775	300	1725	3200	1375	16	ST8WF18.0
48	1075	825	1225	1475	2025	300	1825	3400	1450	16	ST8WF18.0

[a] Applies only to Figure O.1. For tank heights greater than 19.2 mm to 21.6 mm inclusive, 19-mm plate shall be used. T shall not be less than the thickness of the annular plate.

[b] Other composite sections may be used to support the load.

NOTE See Figure O.1 and Figure O.2. For diameters not shown, the dimensions of the next larger size shall be used.

Table O.1b—Dimensions of Under-Bottom Connections (USC)

Inlet Diameter NPS *D*	in.										
	B/2	*E*	*F*	*G*	*H*	*J*	*K*	*L*	*W/2*	*T*[a]	*ST*[b]
6	21	9	14	30	23	12	44	78	36	$^5/_8$	ST4WF8.5
8	22	10	16	32	26	12	45	81	37	$^5/_8$	ST4WF8.5
12	24	12	18	34	30	12	47	85	39	$^5/_8$	ST6WF13.5
18	27	15	20	37	35	12	51	92	42	$^5/_8$	ST6WF13.5
24	30	18	24	41	42	12	55	100	45	$^5/_8$	ST6WF13.5
30	33	21	30	45	51	12	59	108	48	$^5/_8$	ST6WF13.5
36	36	25	36	50	61	12	64	118	51	$^5/_8$	ST8WF18.0
42	39	28	42	54	70	12	68	126	54	$^5/_8$	ST8WF18.0
48	42	32	48	58	80	12	72	134	57	$^5/_8$	ST8WF18.0

[a] Applies only to Figure O.1. For tank heights greater than 64 ft to 72 ft inclusive, $^3/_4$-in. plate shall be used. T shall not be less than the thickness of the annular plate.

[b] Other composite sections may be used to support the load.

NOTE See Figure O.1 and Figure O.2. For diameters not shown, the dimensions of the next larger size shall be used.

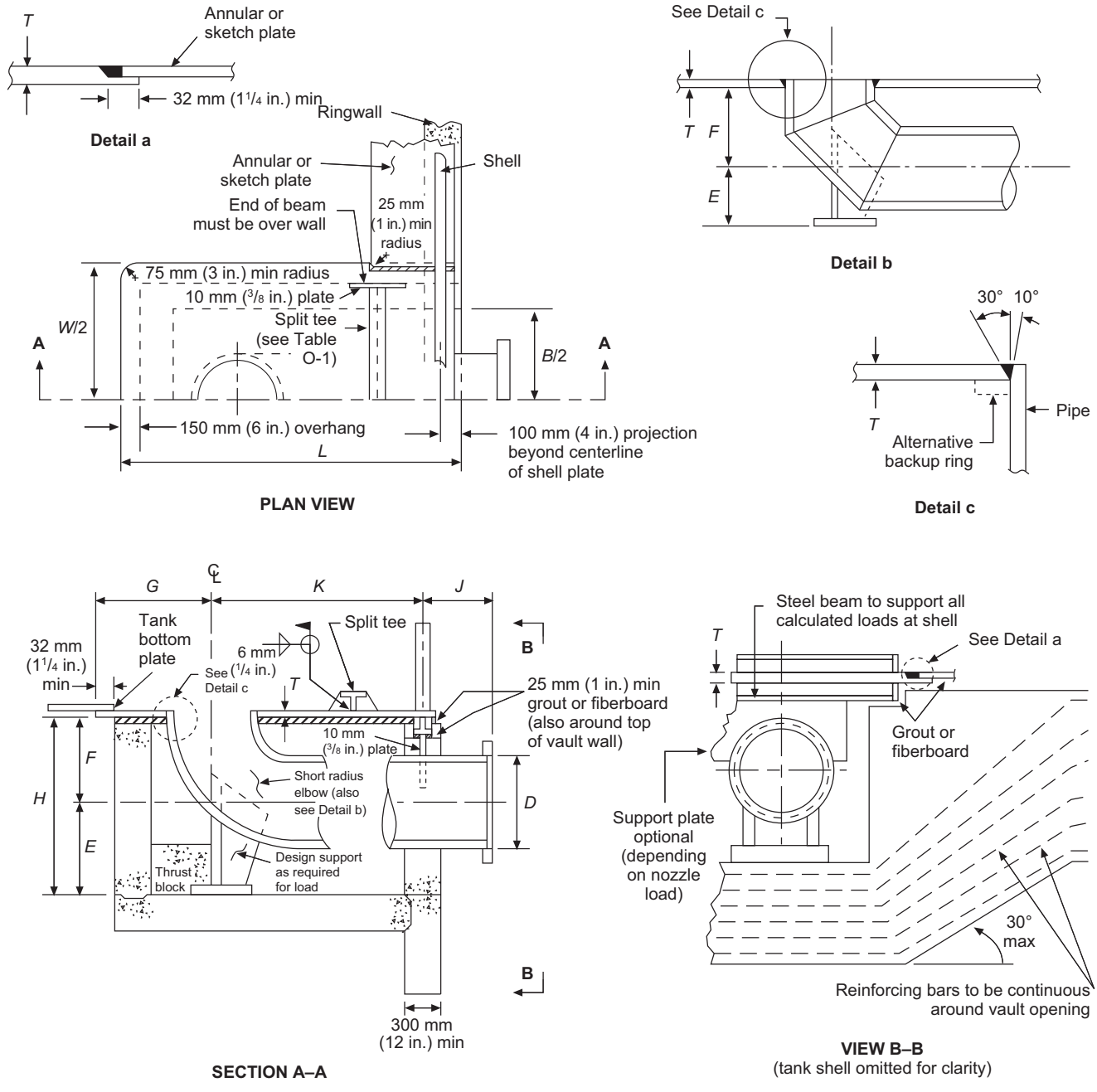

Figure O.1—Example of Under-Bottom Connection with Concrete Ringwall Foundation

O.3.1.5 Concrete walls, floors, and ceilings shall be designed to meet the minimum requirements of ACI 318 and local soil conditions.

O.3.2 Earth Foundation (See Figure O.3)

O.3.2.1 The detail shown in Figure O.3 provides an alternative arrangement for tanks where a concrete ringwall is not provided.

O.3.2.2 Soil and backfill support capability shall be evaluated to ensure that reasonably uniform settlement (if any) will occur under the loads imposed.

O.3.2.3 When the pipe is connected to the bottom at an angle, consideration should be given to design for unbalanced forces if the pipe is trimmed flush with the bottom.

O.3.2.4 When seismically-induced loadings are specified, such loadings under the tank bottom and shell shall be considered when the depth and type of backfill around and over the pipe are selected.

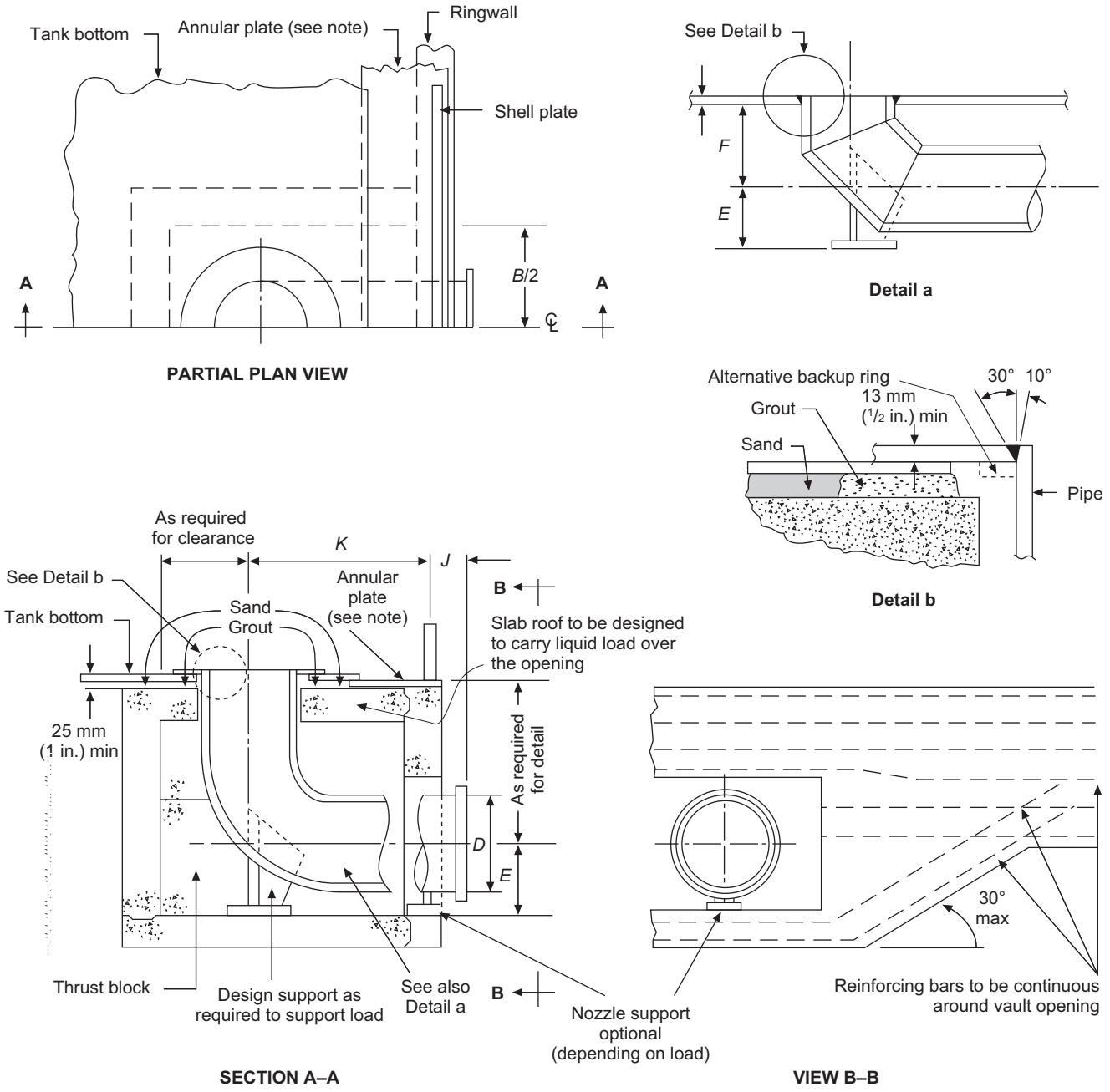

Figure O.2—Example of Under-Bottom Connection with Concrete Ringwall Foundation and Improved Tank Bottom and Shell Support

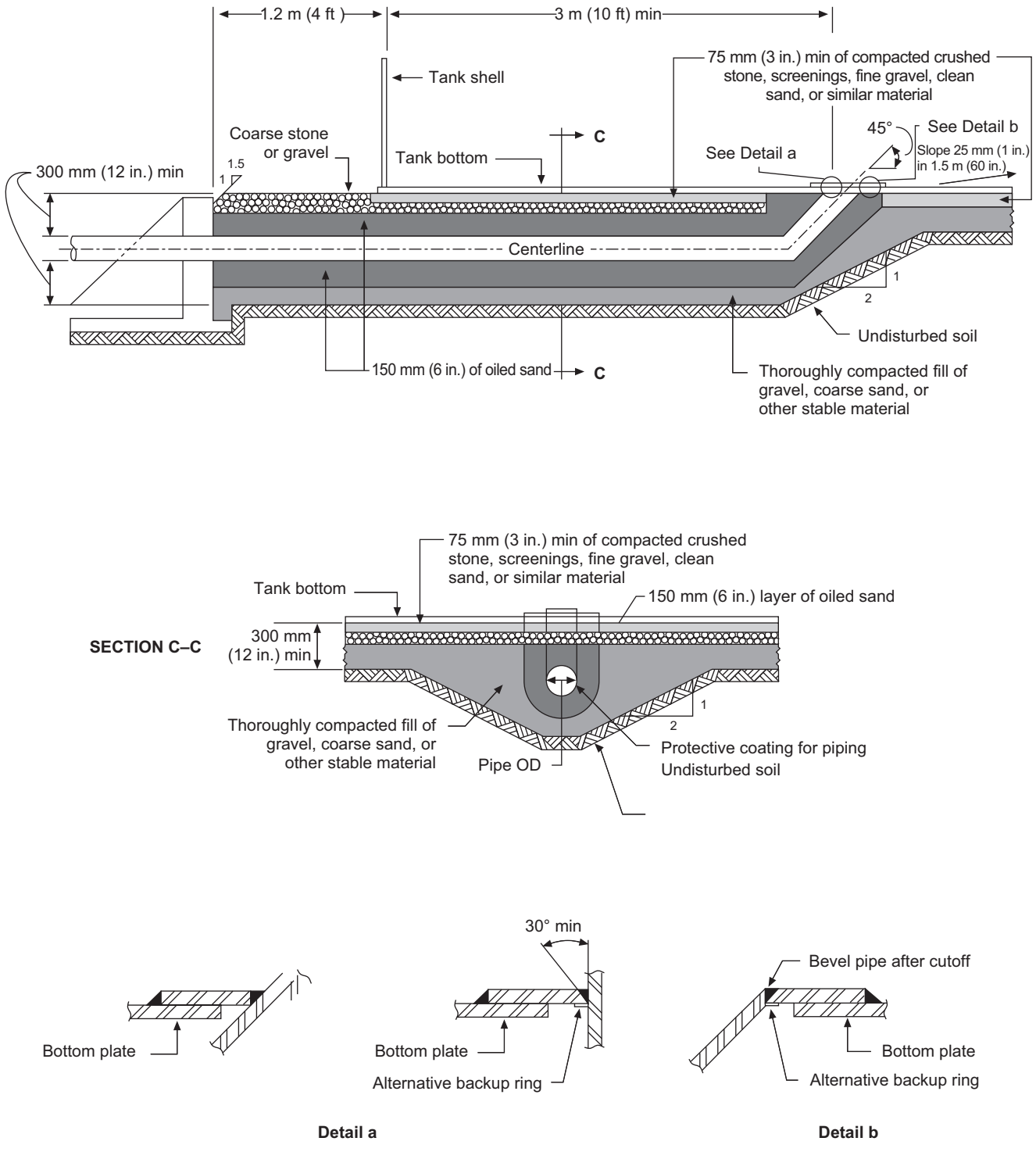

Figure O.3—Example of Under-Bottom Connection with Earth-Type Foundation

Annex P
(normative)

Allowable External Loads on Tank Shell Openings

This annex provides a number of design options requiring decisions by the Purchaser; standard requirements; recommendations; and information that supplements the basic standard. This annex becomes a requirement only when the Purchaser specifies an option covered by this annex or specifies the entire annex.

P.1 Introduction

This Annex shall be used (unless specified otherwise by the Purchaser on Line 29 of the Data Sheet) for tanks larger than 36 m (120 ft) in diameter, and only when specified by the Purchaser for tanks 36 m (120 ft) in diameter and smaller. See W.2(5) for additional requirements.

This Annex presents two different procedures to determine external loads on tank shells. Section P.2 establishes limit loads and P.3 is based on allowable stresses. This Annex is based on H. D. Billimoria and J. Hagstrom's "Stiffness Coefficients and Allowable Loads for Nozzles in Flat Bottom Storage Tanks" and H. D. Billimoria and K. K. Tam's "Experimental Investigation of Stiffness Coefficients and Allowable Loads for a Nozzle in a Flat Bottom Storage Tank."

P.2 Limit Loads

• P.2.1 Scope

This Annex establishes requirements for the design of storage-tank openings that conform to Table 5.6a and Table 5.6b and will be subjected to external piping loads. The requirements of this Annex represent accepted practice for the design of shell openings in the lower half of the bottom shell course that have a minimum elevation from the tank bottom and meet the requirements of Table 5.6a and Table 5.6b. It is recognized that the Purchaser may specify other procedures, special factors, and additional requirements. Any deviation from these requirements shall be mutually agreed upon by the Purchaser and the Manufacturer.

• P.2.2 General

The design of an external piping system that will be connected to a thin-walled, large-diameter cylindrical vertical storage tank may pose a problem in the analysis of the interface between the piping system and the tank opening connections. The piping designer must consider the stiffness of the tank shell and the radial deflection and meridional rotation of the shell opening at the opening-shell connection resulting from product head, pressure, and uniform or differential temperature between the shell and the bottom. The work of the piping designer and the tank designer must be coordinated to ensure that the piping loads imposed on the shell opening by the connected piping are within safe limits. Although three primary forces and three primary moments may be applied to the mid-surface of the shell at an opening connection, only one force, F_R, and two moments, M_L and M_C, are normally considered significant causes of shell deformation (see P.2.3 for a description of the nomenclature).

P.2.3 Nomenclature

a is the outside radius of the opening connection, in mm (in.);

E is the modulus of elasticity, in MPa (lbf/in.^{2}) (see Table P.1a and Table P.1b);

F_R is the radial thrust applied at the mid-surface of the tank shell at the opening connection, in N (lbf);

F_P is the pressure end load on the opening for the pressure resulting from the design product head at the elevation of the opening centerline, $\pi a^2 P$, in N (lbf);

G is the design specific gravity of the liquid;

H is themaximum allowable tank filling height, in mm (in.);

K_C is the stiffness coefficient for the circumferential moment, in N-mm/radian (in.-lbf/radian);

K_L is the stiffness coefficient for the longitudinal moment, in N-mm/radian (in.-lbf/radian);

K_R is the stiffness coefficient for the radial thrust load, in N/mm (lbf/in.);

L is the vertical distance from the opening centerline to the tank bottom, in mm (in.);

M_C is the circumferential moment applied to the mid-surface of the tank shell, in N-mm (in.-lbf);

M_L is the longitudinal moment applied to the mid-surface of the tank shell, in N-mm (in.-lbf);

P is the pressure resulting from product head at the elevation of the opening centerline, in MPa (lbf/in.^{2});

R is the nominal tank radius, in mm (in.);

t is the shell thickness at the opening connection, in mm (in.);

ΔT is the normal design temperature minus installation temperature, in °C (°F);

W is the unrestrained radial growth of the shell, in mm (in.);

W_R is the resultant radial deflection at the opening connection, in mm (in.);

X_A is the $L + a$, in mm (in.);

X_B is the $L – a$, in mm (in.);

X_C is the L, in mm (in.);

Y_C is the coefficient determined from Figure P.4b;

Y_F, Y_L are the coefficients determined from Figure P.4a;

α is the thermal expansion coefficient of the shell material, in mm/[mm-°C] (in./[in.-°F]) (see Table P.1a and Table P.1b);

β is the characteristic parameter, $1.285/(Rt)^{0.5}$ (1/mm) (1/in.);

λ equals $a/(Rt)^{0.5}$;

θ is the unrestrained shell rotation resulting from product head, in radians;

θ_C is the shell rotation in the horizontal plane at the opening connection resulting from the circumferential moment, in radians;

θ_L is the shell rotation in the vertical plane at the opening connection resulting from the longitudinal moment, in radians.

Table P.1a—Modulus of Elasticity and Thermal Expansion Coefficient at the Design Temperature (SI)

Design Temperature °C	Modulus of Elasticity (MPa) E	Thermal Expansion Coefficient[a] (mm × 10^{-6}/[mm-°C])
20	203,000	—
93	199,000	12.0
150	195,000	12.4
200	191,000	12.7
260	188,000	13.1

[a] Mean coefficient of thermal expansion, going from 20 °C to the temperature indicated.

NOTE Linear interpolation may be applied for intermediate values.

Table P.1b—Modulus of Elasticity and Thermal Expansion Coefficient at the Design Temperature (USC)

Design Temperature °F	Modulus of Elasticity (lbf/in.^{2}) E	Thermal Expansion Coefficient[a] (in. × 10^{-6} per in.-°F)
70	29,500,000	—
200	28,800,000	6.67
300	28,300,000	6.87
400	27,700,000	7.07
500	27,300,000	7.25

[a] Mean coefficient of thermal expansion, going from 70 °F to the temperature indicated.

NOTE Linear interpolation may be applied for intermediate values.

P.2.4 Stiffness Coefficients for Opening Connections

The stiffness coefficients K_R, K_L, and K_C corresponding to the piping loads F_R, M_L, and M_C at an opening connection, as shown in Figure P.1, shall be obtained by the use of Figures P.2A through P.2L. Figures P.2A through P.2L shall be used to interpolate intermediate values of coefficients.

P.2.5 Shell Deflection and Rotation

P.2.5.1 Radial Growth of Shell

The unrestrained outward radial growth of the shell at the center of the opening connection resulting from product head and/or thermal expansion shall be determined as follows:

In SI units:

$$W = \frac{9.8 \times 10^{-6} GHR^2}{Et} \times \left[1 - e^{-\beta L} \cos\,(\beta L) - \frac{L}{H}\right] + \alpha R \Delta T$$

In USC units:

$$W = \frac{0.036 GHR^2}{Et} \times \left[1 - e^{-\beta L} \cos\,(\beta L) - \frac{L}{H}\right] + \alpha R \Delta T$$

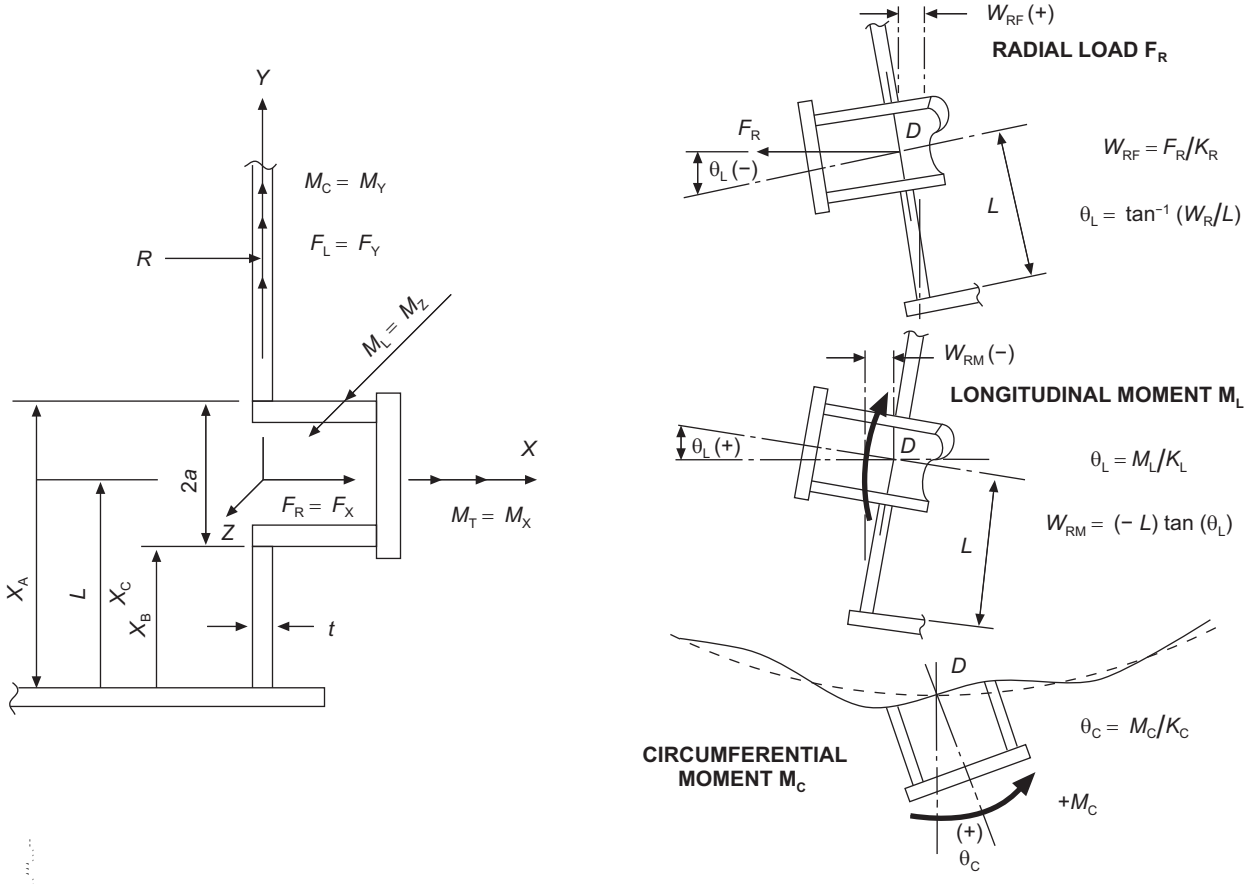

Figure P.1—Nomenclature for Piping Loads and Deformation

P.2.5.2 Rotation of Shell

The unrestrained rotation of the shell at the center of the nozzle-shell connection resulting from product head shall be determined as follows:

In SI units:

$$\theta = \frac{9.8 \times 10^{-6} GHR^2}{Et} \times \left\{ \frac{1}{H} - \beta e^{-\beta L} [\cos(\beta L) + \sin(\beta L)] \right\}$$

In USC units:

$$\theta = \frac{0.036 GHR^2}{Et} \times \left\{ \frac{1}{H} - \beta e^{-\beta L} [\cos(\beta L) + \sin(\beta L)] \right\}$$

P.2.6 Determination of Loads on the Opening Connection

The relationship between the elastic deformation of the opening connection and the external piping loads is expressed as follows:

$$W_R = \frac{F_R}{K_R} - L\tan\left(\frac{M_L}{K_L}\right) + W$$

$$\theta_L = \frac{M_L}{K_L} - \tan^{-1}\left(\frac{F_R}{LK_R}\right) + \theta$$

$$\theta_C = \frac{M_C}{K_C}$$

K_R, K_L, and K_C are the shell stiffness coefficients determined from Figures P.2a through P.2l. W_R, θ_L, and θ_C are the resultant radial deflection and rotation of the shell at the opening connection resulting from the piping loads F_R, M_L, and M_C and the product head, pressure, and uniform or differential temperature between the shell and the tank bottom. F_R, M_L, and M_C shall be obtained from analyses of piping flexibility based on consideration of the shell stiffness determined from Figures P.2a through P.2l, the shell deflection and rotation determined as described in P.2.5.1 and P.2.5.2, and the rigidity and restraint of the connected piping system.

P.2.7 Determination of Allowable Loads for the Shell Opening

P.2.7.1 Construction of Nomograms

P.2.7.1.1 Determine the nondimensional quantities $X_A/(Rt)^{0.5}$, $X_B/(Rt)^{0.5}$, and $X_C/(Rt)^{0.5}$ for the opening configuration under consideration.

P.2.7.1.2 Lay out two sets of orthogonal axes on graph paper, and label the abscissas and ordinates as shown in Figure P.3a and Figure P.3b, where Y_C, Y_F, and Y_L are coefficients determined from Figure P.4a and Figure P.4b.

P.2.7.1.3 Lay out two sets of orthogonal axes on graph paper, and label the abscissas and ordinates as shown in Figure P.3A and Figure P.3B, where Y_C, Y_F, and Y_L are coefficients determined from Figure P.4a and Figure P.4b.

P.2.7.1.4 Construct four boundaries for Figure P.3a and two boundaries for Figure P.3b. Boundaries b_1 and b_2 shall be constructed as lines at 45-degree angles between the abscissa and the ordinate. Boundaries c_1, c_2, and c_3 shall be constructed as lines at 45-degree angles passing through the calculated value indicated in Figure P.3a and Figure P.3b plotted on the positive x axis.

P.2.7.2 Determination of Allowable Loads

P.2.7.2.1 Use the values for F_R, M_L, and M_C obtained from the piping analyses to determine the quantities $(\lambda/2Y_F)(F_R/F_P)$, $(\lambda/aY_L)(M_L/F_P)$, and $(\lambda/aY_C)(M_C/F_P)$.

P.2.7.2.2 Plot the point $(\lambda/2Y_F)(F_R/F_P)$, $(\lambda/aY_L)(M_L/F_P)$ on the nomogram constructed as shown in Figure P.5a.

P.2.7.2.3 Plot the point $(\lambda/2Y_F)(F_R/F_P)$, $(\lambda/aY_L)(M_C/F_P)$ on the nomogram constructed as shown in Figure P.5b.

P.2.7.2.4 The external piping loads F_R, M_L, and M_C to be imposed on the shell opening are acceptable if both points determined from P.2.7.2.2 and P.2.7.2.3 lie within the boundaries of the nomograms constructed for the particular opening-tank configuration.

P.2.8 Manufacturer and Purchaser Responsibility

- **P.2.8.1** The Manufacturer is responsible for furnishing to the Purchaser the shell stiffness coefficients (see P.2.4) and the unrestrained shell deflection and rotation (see P.2.5). The Purchaser is responsible for furnishing to the Manufacturer the magnitude of the shell-opening loads (see P.2.6). The Manufacturer shall determine, in accordance with P.2.7, the acceptability of the shell-opening loads furnished by the Purchaser. If the loads are excessive, the piping configuration shall be modified so that the shell-opening loads fall within the boundaries of the nomograms constructed as in P.2.7.1.

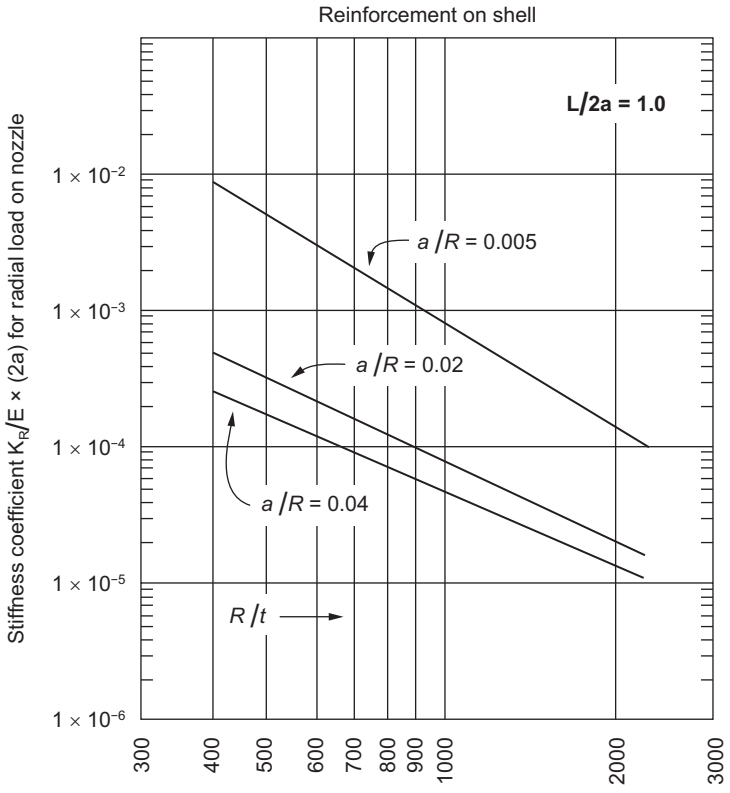

Figure P.2a—Stiffness Coefficient for Radial Load: Reinforcement on Shell (*L*/2*a* = 1.0)

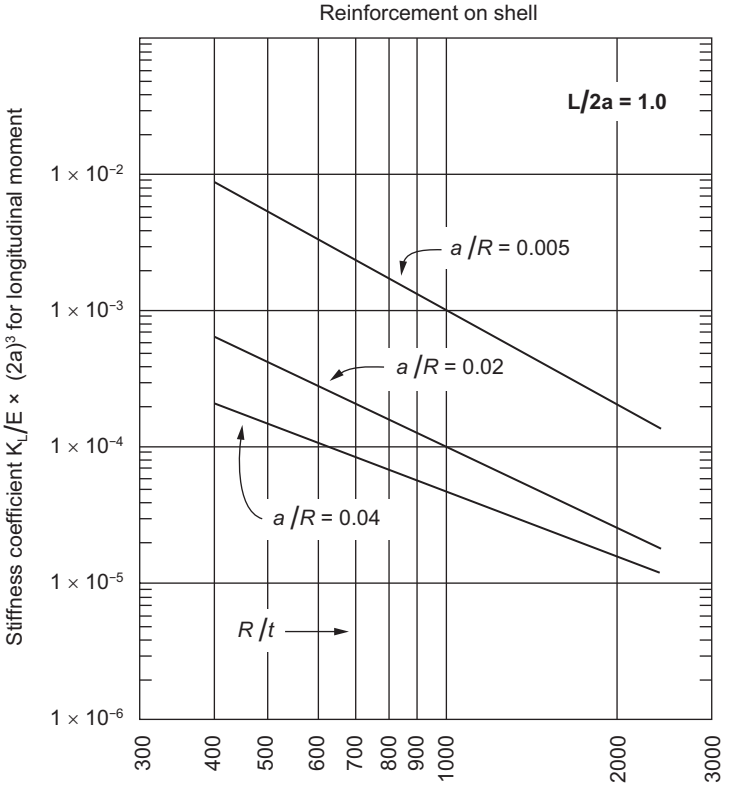

Figure P.2b—Stiffness Coefficient for Longitudinal Moment: Reinforcement on Shell (*L*/2*a* = 1.0)

--`,,,`````,,,

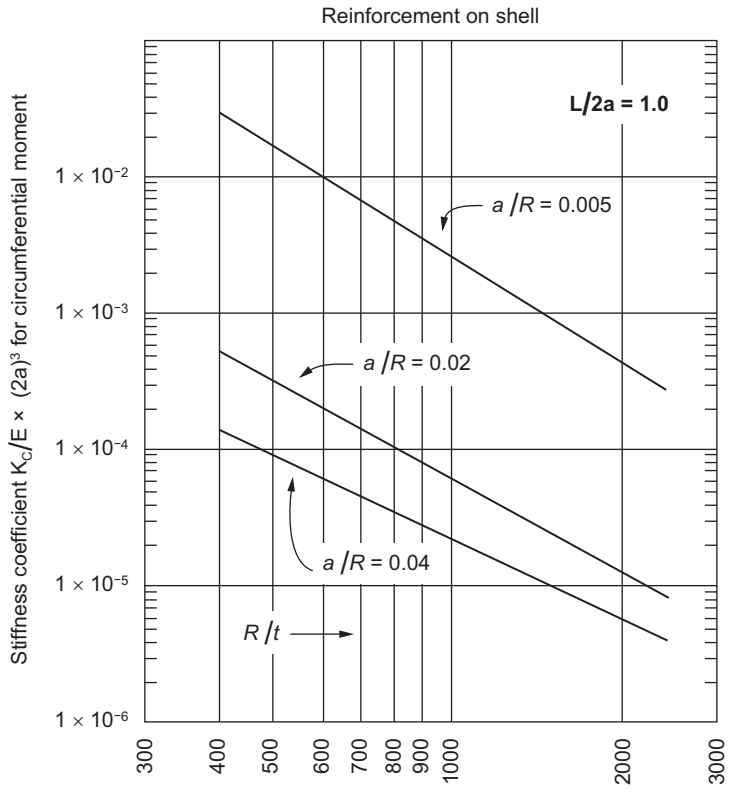

Figure P.2c—Stiffness Coefficient for Circumferential Moment: Reinforcement on Shell (*L*/2*a* = 1.0)

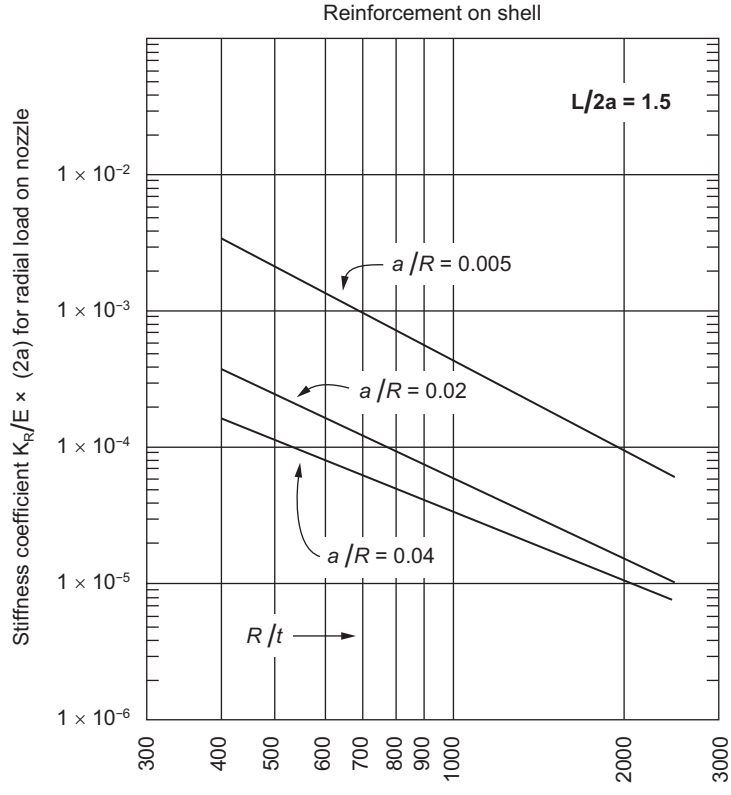

Figure P.2d—Stiffness Coefficient for Radial Load: Reinforcement on Shell (*L*/2*a* = 1.5)

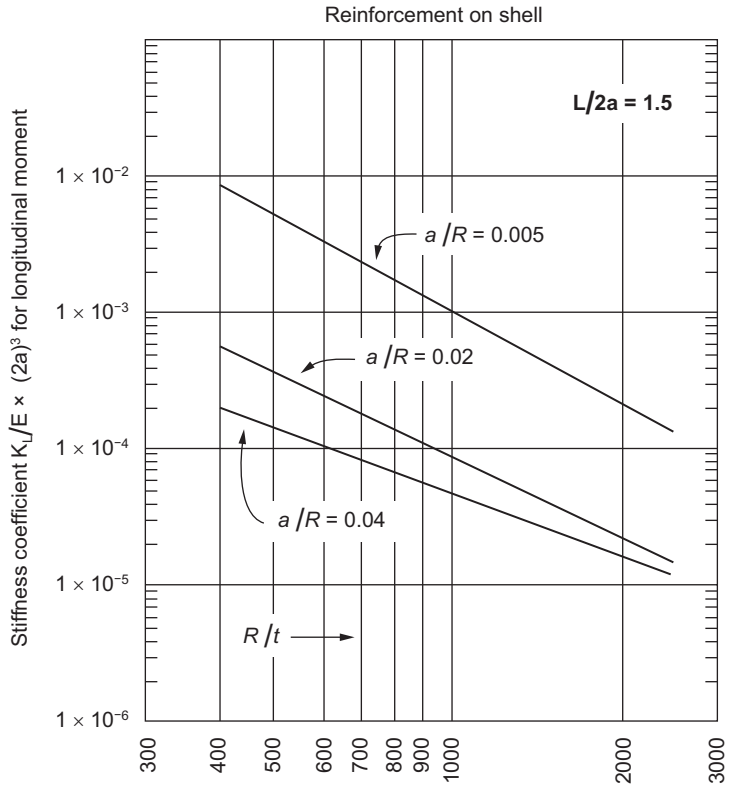

Figure P.2e—Stiffness Coefficient for Longitudinal Moment: Reinforcement on Shell (*L*/2*a* = 1.5)

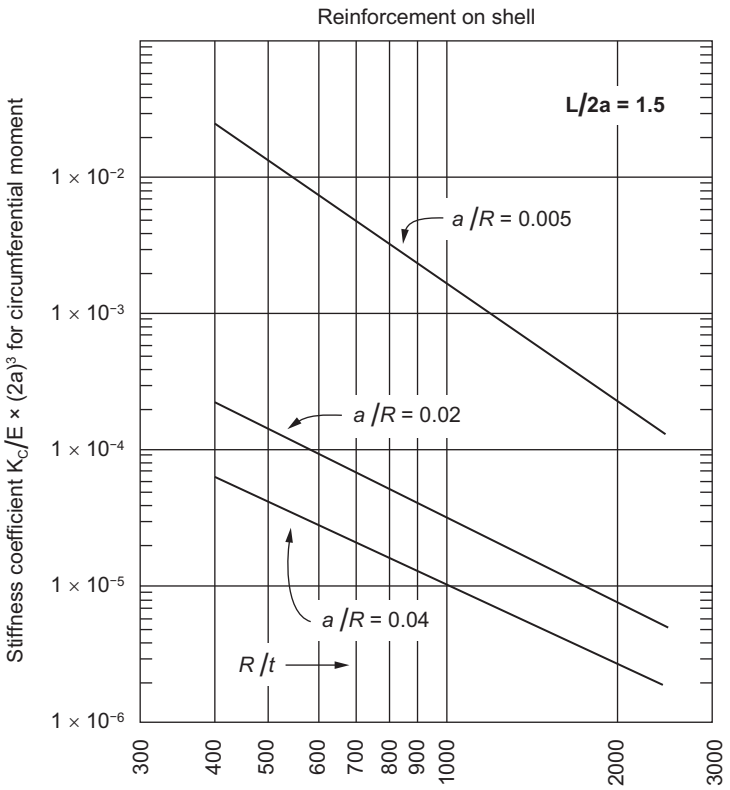

Figure P.2f—Stiffness Coefficient for Circumferential Moment: Reinforcement on Shell (*L*/2*a* = 1.5)

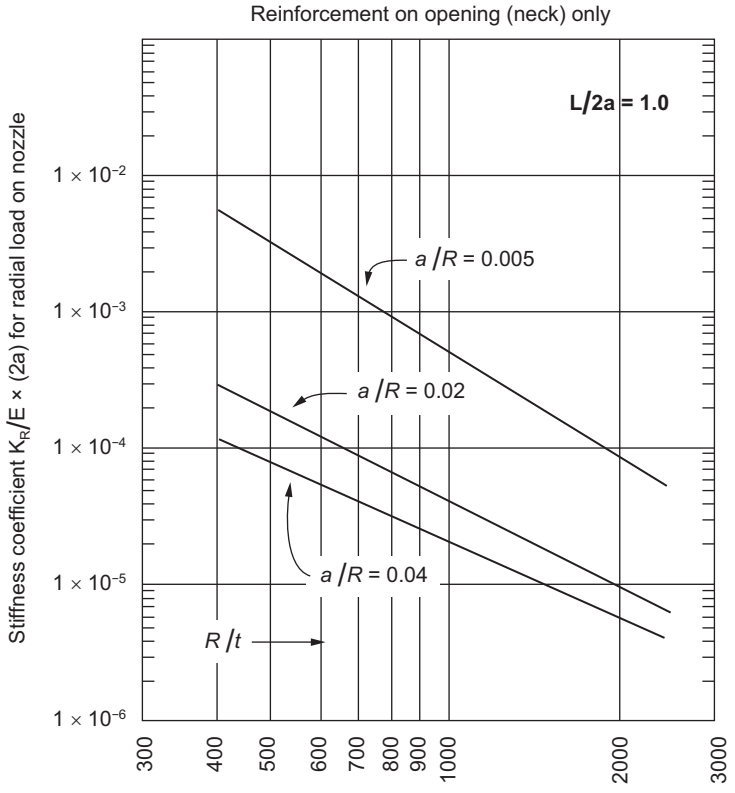

Figure P.2g—Stiffness Coefficient for Radial Load: Reinforcement in Nozzle Neck Only (*L*/2*a* = 1.0)

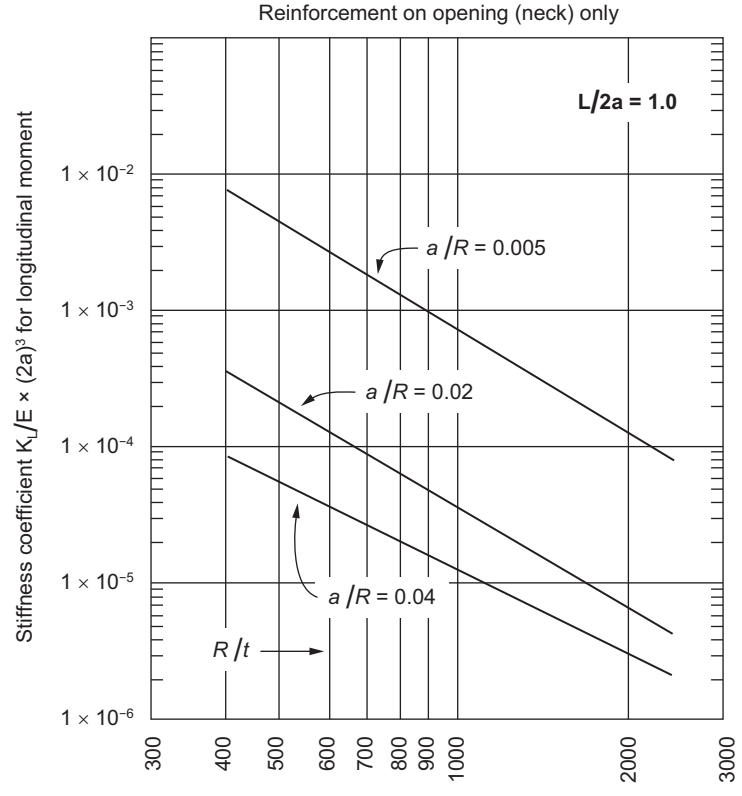

Figure P.2h—Stiffness Coefficient for Longitudinal Moment: Reinforcement in Nozzle Neck Only (*L*/2*a* = 1.0)

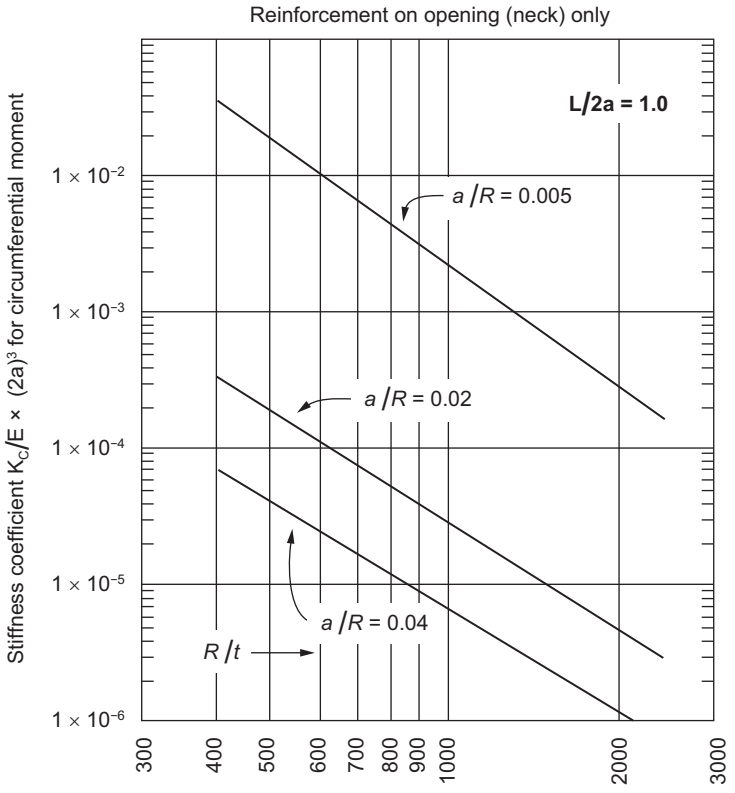

Figure P.2i—Stiffness Coefficient for Circumferential Moment: Reinforcement in Nozzle Neck Only (*L*/2*a* = 1.0)

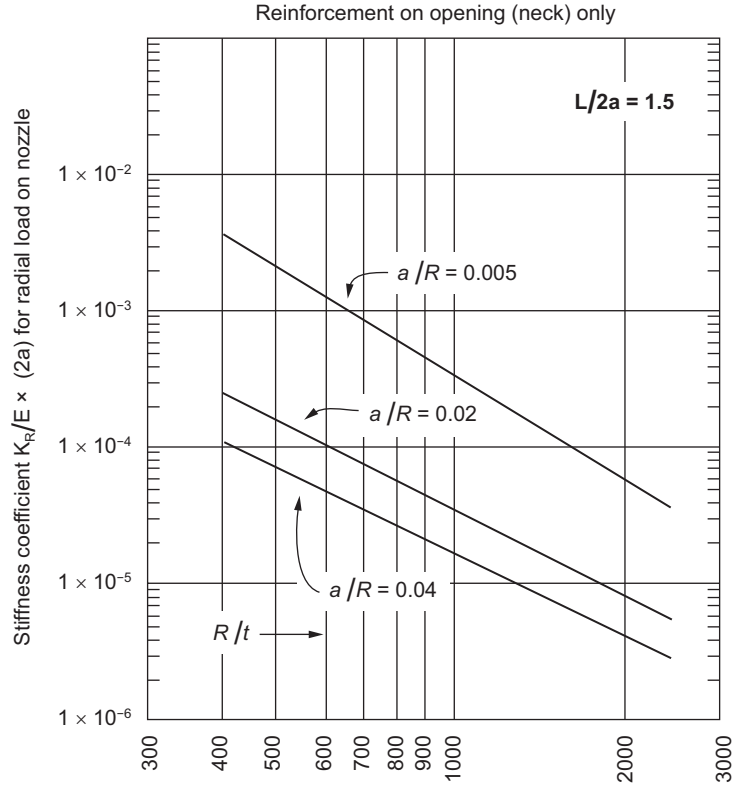

Figure P.2j—Stiffness Coefficient for Radial Load: Reinforcement in Nozzle Neck Only (*L*/2*a* = 1.5)

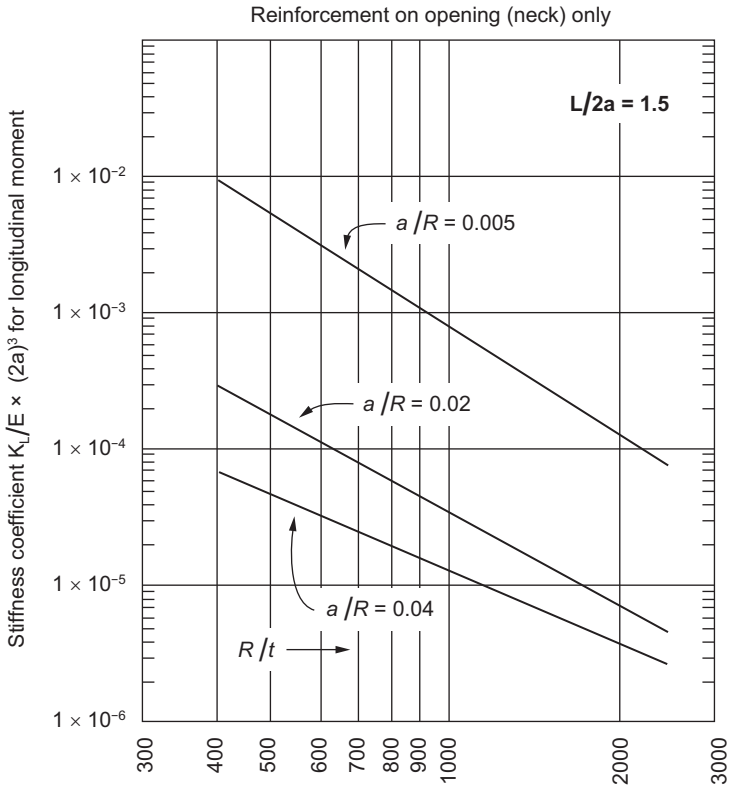

Figure P.2k—Stiffness Coefficient for Longitudinal Moment: Reinforcement in Nozzle Neck Only (*L*/2*a* = 1.5)

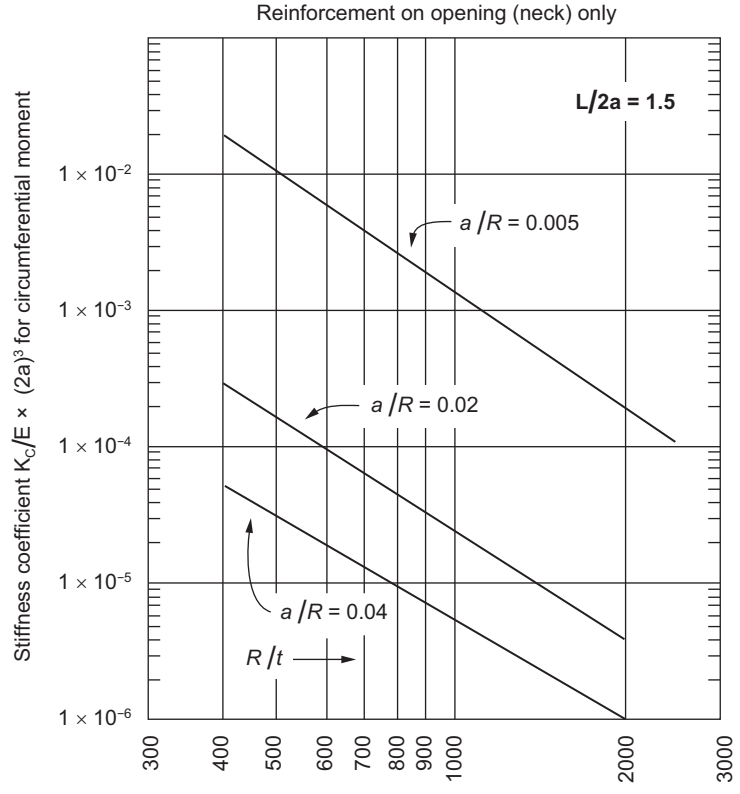

Figure P.2l—Stiffness Coefficient for Circumferential Moment: Reinforcement in Nozzle Neck Only (*L*/2*a* = 1.5)

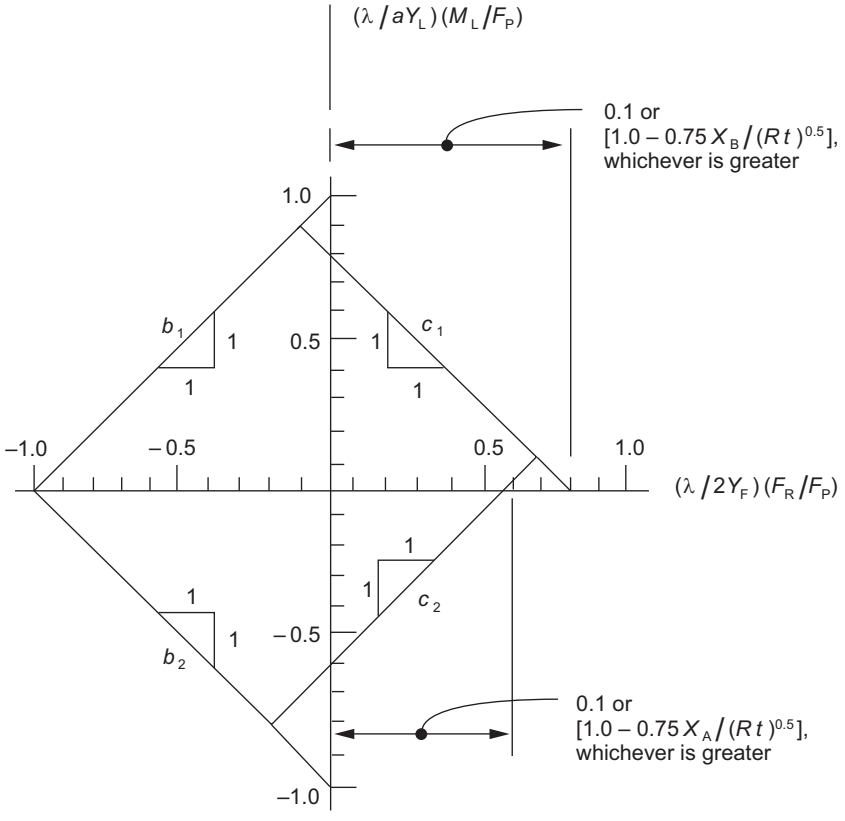

Figure P.3a—Construction of Nomogram for b_1, b_2, c_1, c_2 Boundary

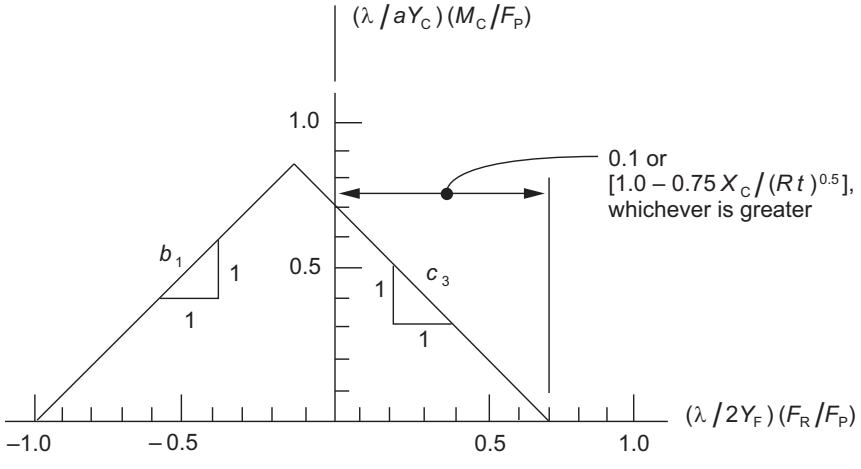

Figure P.3b—Construction of Nomogram for b_1, c_3 Boundary

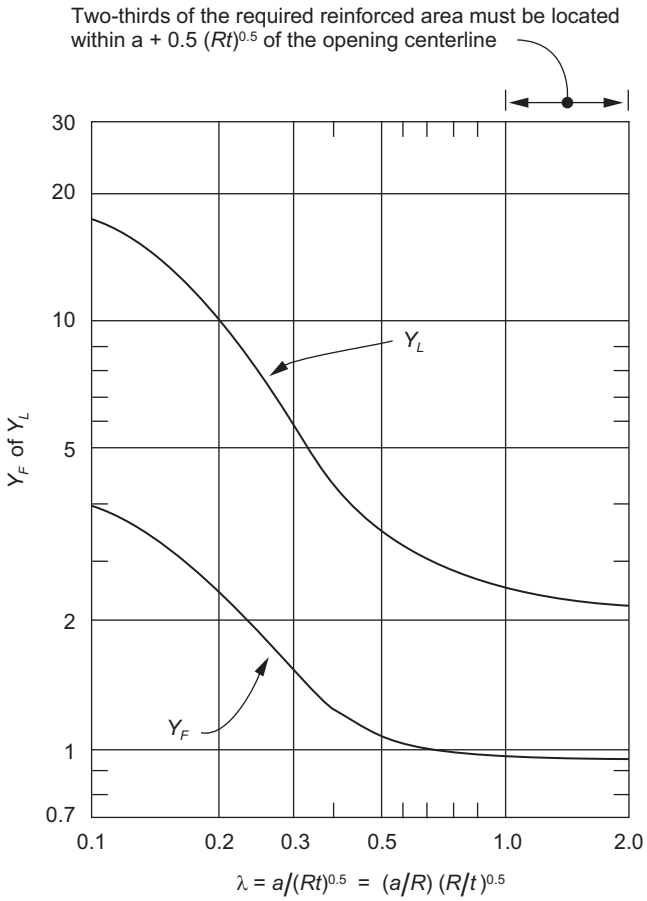

Figure P.4a—Obtaining Coefficients Y_F and Y_L

- **P.2.8.2** Changing the elevation of the opening and changing the thickness of the shell are alternative means of reducing stresses, but because these measures can affect fabrication, they may be considered only if mutually agreed upon by the Purchaser and the Manufacturer.

P.2.9 Sample Problem

P.2.9.1 Problem

A tank is 80 m (260 ft) in diameter and 19.2 m (64 ft) high, and its bottom shell course is 34 mm (1.33 in.) thick. The tank has a low-type nozzle with an outside diameter of 610 mm (24 in.) in accordance with API Standard 650, and the nozzle centerline is 630 mm (24.75 in.) up from the bottom plate, with reinforcement on the shell (see Figure P.6). What are the end conditions (W, θ, K_R, K_L, and K_C) for an analysis of piping flexibility? What are the limit loads for the nozzle?

a = 305 mm (12 in.)

L = 630 mm (24.75 in.)

H = 19,200 mm ($64 \times 12 = 768$ in.)

DT = 90 ° – 20 ° = 70 °C (200 ° – 70 ° = 130 °F)

R = 80,000/2 = 40,000 mm ($(260 \times 12)/2 = 1560$ in.)

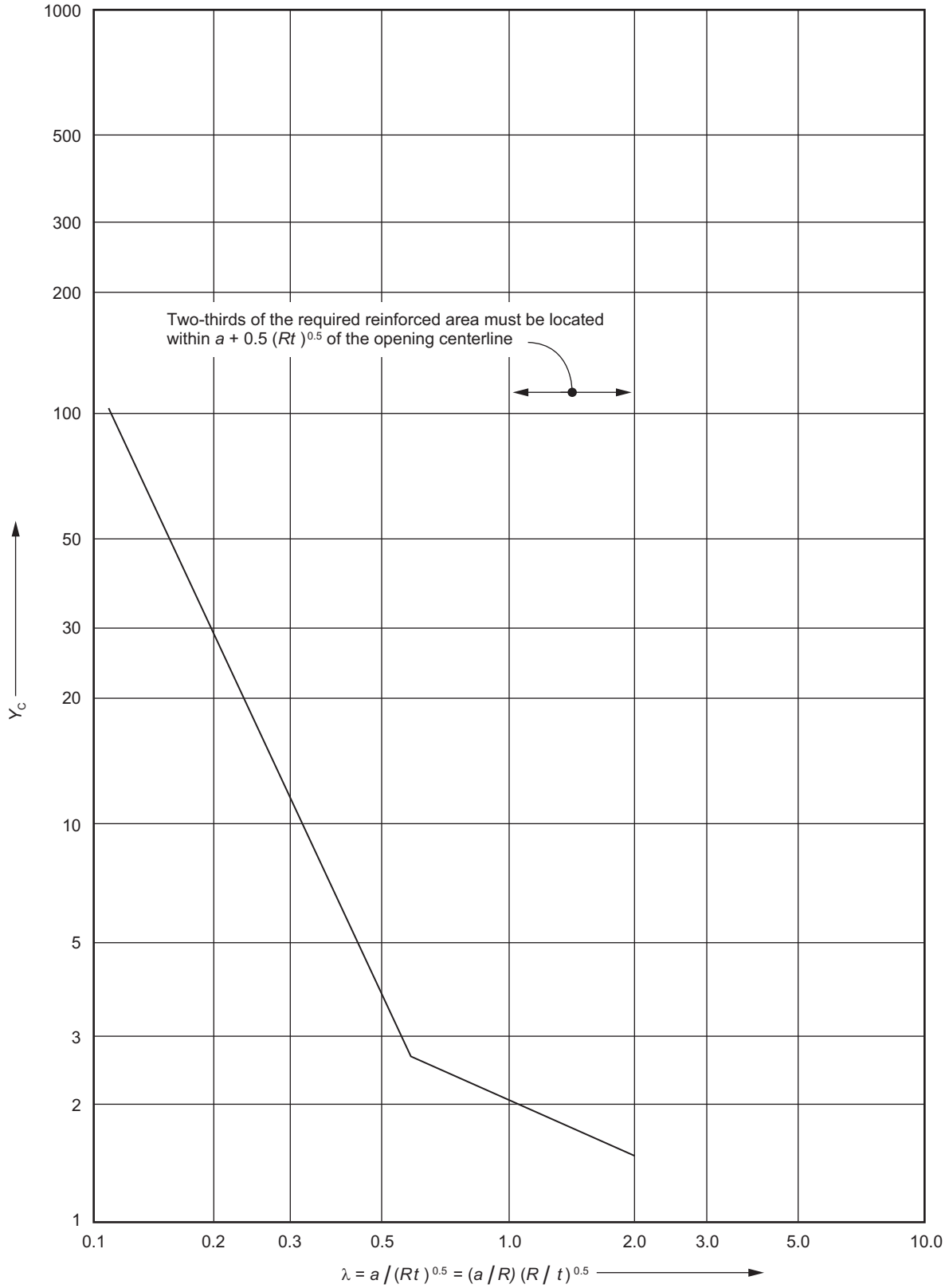

Figure P.4b—Obtaining Coefficient Y_C

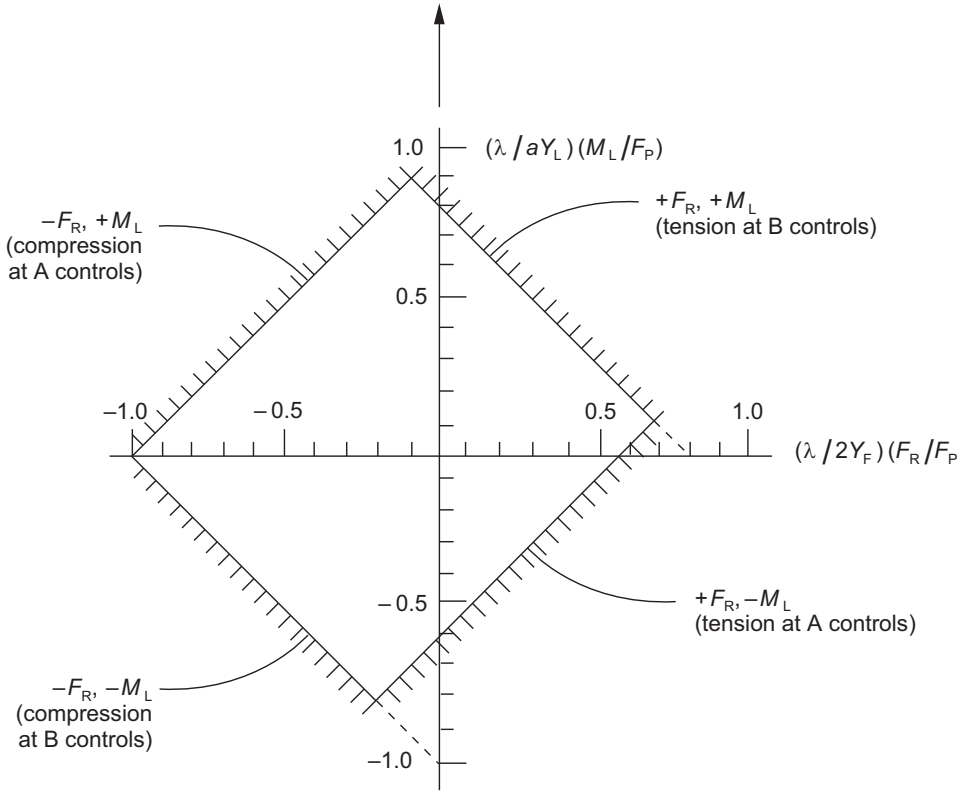

Figure P.5a—Determination of Allowable Loads from Nomogram: F_R and M_L

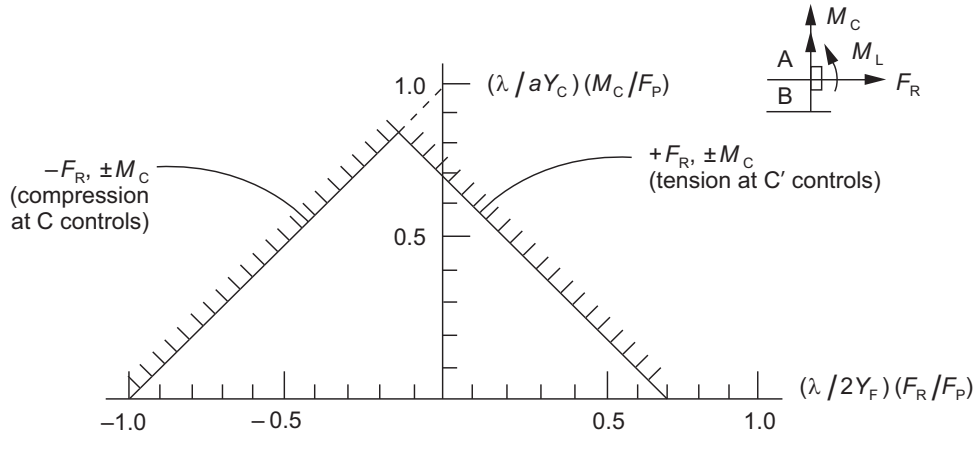

Figure P.5b—Determination of Allowable Loads from Nomogram: F_R and M_C

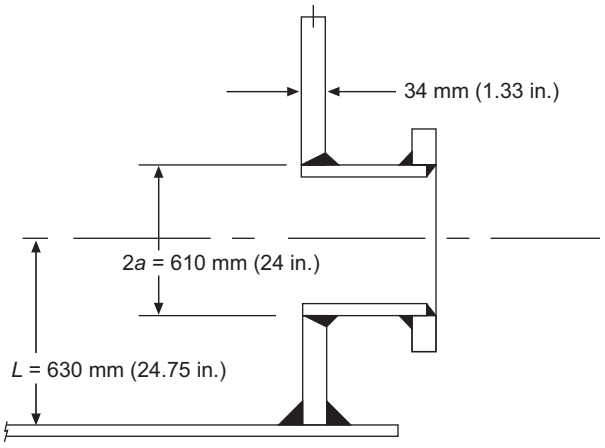

Figure P.6—Low-Type Nozzle with Reinforcement on Shell

G = 1.0

t = 34 mm (1.33 in.)

P.2.9.2 Solution

P.2.9.2.1 Calculate the stiffness coefficients for the nozzle-tank connection:

R/t = 40,000/34 = 1176 (1560/1.33 = 1173)

a/R = 305/40,000 = 0.008 (12/1560 = 0.008)

$L/2a$ = 630/610 @ 1.0 (24.75/24 @ 1.0)

For the radial load (from Figure P.2a),

In SI units:

$$\frac{K_R}{E(2a)} = 3.1 \times 10^{-4}$$

K_R = $(3.1 \times 10^{-4})(199{,}000\ \text{N/mm}^2)(610\ \text{mm})$

$= 3.9 \times 10^4\ \text{N/mm}$

In USC units:

$$\frac{K_R}{E(2a)} = 3.1 \times 10^{-4}$$

$K_R = (3.1 \times 10^{-4})(28.8 \times 10^6\ \text{lb/in.}^2)(24\ \text{in.})$

$= 2.14 \times 10^5\ \text{lbf/in.}$

For the longitudinal moment (from Figure P.2b),

In SI units:

$$\frac{K_L}{E(2a)^3} = 4.4 \times 10^{-4}$$

$$K_L = (4.4 \times 10^{-4})(199{,}000 \text{ N/mm}^2)(610 \text{ mm})^3$$
$$= 2.0 \times 10^{10} \text{ N-mm/rad}$$

In USC units:

$$\frac{K_L}{E(2a)^3} = 4.3 \times 10^{-4}$$

$$K_L = (4.3 \times 10^{-4})(28.8 \times 10^6)(24)^3$$
$$= 1.7 \times 10^8 \text{ in.-lb/rad}$$

For the circumferential moment (from Figure P.2C),

In SI units:

$$\frac{K_C}{E(2a)^3} = 9.4 \times 10^{-4}$$

$$K_C = (9.4 \times 10^{-4})(199{,}000 \text{ N/mm}^2)(610 \text{ mm})^3$$
$$= 4.2 \times 10^{10} \text{ N-mm/rad}$$

In USC units:

$$\frac{K_C}{E(2a)^3} = 9.3 \times 10^{-4}$$

$$K_C = (9.3 \times 10^{-4})(28.8 \times 10^6)(24)^3$$
$$= 3.7 \times 10^8 \text{ in.-lb/rad}$$

P.2.9.2.2 Calculate the unrestrained shell deflection and rotation at the nozzle centerline resulting from the hydrostatic head of the full tank:

In SI units:

$$\beta = \frac{1.285}{(Rt)^{0.5}} = \frac{1.285}{(40{,}000 \times 34)^{0.5}} = 0.00110 \text{ mm}$$

$$\beta L = (0.00110)(630) = 0.7 \text{ rad}$$

$$W = \frac{9.8 \times 10^{-6} GHR^2}{Et}\left[1 - e^{-\beta L}\cos(\beta L) - \frac{L}{H}\right] + \alpha R \Delta T$$

$$= \frac{(9.8 \times 10^{-6})(1)(19{,}200)(40{,}000)^2}{(199{,}000)(34)}$$

$$\left[1-e^{-0.7}\cos(0.7)-\frac{630}{19{,}200}\right]+(12.0\times10^{-6})(40{,}000)(70)$$

$$= 59.77 \text{ mm}$$

$$\theta = \frac{9.8\times10^{-6}GHR^2}{Et}\left\{\frac{1}{H}-\beta e^{-\beta L}[\cos(\beta L)+\sin(\beta L)]\right\}$$

$$= \frac{(9.8\times10^{-6})(1)(19{,}200)(40{,}000)^2}{(199{,}000)(34)}$$

$$\left\{\frac{1}{19{,}200}-0.0011e^{-0.7}[\cos(0.7)+\sin(0.7)]\right\}$$

$$= -0.032 \text{ rad}$$

In USC units:

$$\beta = \frac{1.285}{(Rt)^{0.5}} = \frac{1.285}{(1560\times1.33)^{0.5}} = 0.0282 \text{ in.}$$

$$\beta L = (0.0282)(24.75) = 0.7 \text{ rad}$$

$$W = \frac{0.036GHR^2}{Et}\left[1-e^{-\beta L}\cos(\beta L)-\frac{L}{H}\right]+\alpha R\Delta T$$

$$= \frac{0.036(1)(768)(1560)^2}{(28.8\times10^6)(1.33)}\left[1-e^{-0.7}\cos(0.7)-\frac{24.75}{768}\right]$$

$$+(6.67\times10–6)(1560)(130)$$

$$= 2.39 \text{ in.}$$

$$\theta = \frac{0.036GHR^2}{Et}\left\{\frac{1}{H}-\beta e^{-\beta L}[\cos(\beta L)+\sin(\beta L)]\right\}$$

$$= \frac{0.036(1)(768)(1560)^2}{(28.8\times10^6)(1.33)}\left\{\frac{1}{768}-\beta e^{-0.7}[\cos(0.7)+\sin(0.7)]\right\}$$

$$= -0.032 \text{ rad}$$

Perform the analysis of piping flexibility using W, θ, K_R, K_L, and K_C as the end conditions at the nozzle-to-piping connection.

X_A = 935 mm (36.75 in.)

X_B = 325 mm (12.75 in.)

X_C = 630 mm (24.75 in.)

Determine the allowable loads for the shell opening, as shown in P.9.2.3.

P.2.9.2.3 Determine the nondimensional quantities:

In SI units:

$$\frac{X_A}{(Rt)^{0.5}} = \frac{935}{[(40{,}000)(34)]^{0.5}} = 0.80$$

$$\frac{X_B}{(Rt)^{0.5}} = \frac{325}{[(40{,}000)(34)]^{0.5}} = 0.28$$

$$\frac{X_C}{(Rt)^{0.5}} = \frac{630}{[(40{,}000)(34)]^{0.5}} = 0.54$$

$$\lambda = \frac{A}{(Rt)^{0.5}} = \frac{305}{[(40{,}000)(34)]^{0.5}} = 0.26$$

In USC units:

$$\frac{X_A}{(Rt)^{0.5}} = \frac{36.75}{[(1560)(1.33)]^{0.5}} = 0.81$$

$$\frac{X_B}{(Rt)^{0.5}} = \frac{12.75}{[(1560)(1.33)]^{0.5}} = 0.28$$

$$\frac{X_C}{(Rt)^{0.5}} = \frac{24.75}{[(1560)(1.33)]^{0.5}} = 0.54$$

$$\lambda = \frac{A}{(Rt)^{0.5}} = \frac{12}{[(1560)(1.33)]^{0.5}} = 0.26$$

From Figure P.4a and Figure P.4b,

Y_F = 1.9/N (1.9/lbf)

Y_L = 7.2/N-mm (7.2/in.-lbf)

Y_C = 13.4/N-mm (13.6/in.-lbf)

P.2.9.2.4 Construct the load nomograms (see Figure P.7):

In SI units:

$$1.0 - 0.75\frac{X_B}{(Rt)^{0.5}} = 1.0 - 0.75\left(\frac{325}{1166}\right) = 0.79$$

$$1.0 - 0.75\frac{X_A}{(Rt)^{0.5}} = 1.0 - 0.75\left(\frac{935}{1166}\right) = 0.40$$

$$1.0 - 0.75\frac{X_C}{(Rt)^{0.5}} = 1.0 - 0.75\left(\frac{630}{1166}\right) = 0.59$$

$$F_P = P\pi a^2 = (9800)(1.0)(19.2 - 0.630)\pi(0.305)^2$$

$$= 53{,}200 \text{ N}$$

$$\frac{\lambda}{2Y_F}\left(\frac{F_R}{F_P}\right) = \frac{0.26}{(2)(2.0)}\left(\frac{F_R}{53{,}200}\right) = 1.29 \times 10^{-6} F_R$$

$$\frac{\lambda}{aY_L}\left(\frac{M_L}{F_P}\right) = \frac{0.26}{(305)(7.8)}\left(\frac{M_L}{53{,}200}\right) = 2.22 \times 10^{-9} M_L$$

$$\frac{\lambda}{aY_C}\left(\frac{M_C}{F_P}\right) = \frac{0.26}{(305)(15)}\left(\frac{M_C}{53{,}200}\right) = 1.19 \times 10^{-9} M_C$$

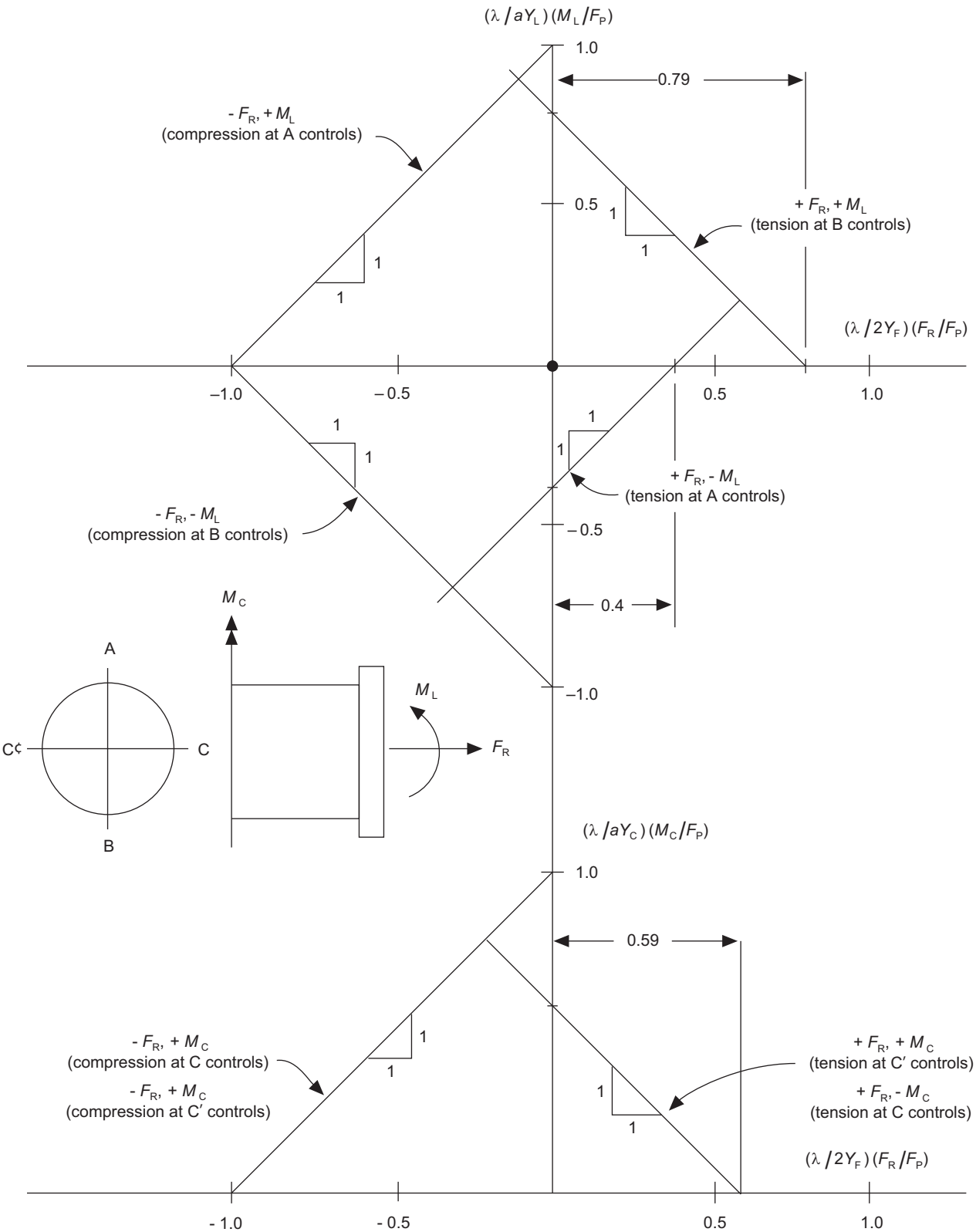

Figure P.7—Allowable-Load Nomograms for Sample Problem

In USC units:

$$1.0 - 0.75\frac{X_B}{(Rt)^{0.5}} = 1.0 - 0.75\left(\frac{12.75}{45.6}\right) = 0.79$$

$$1.0 - 0.75\frac{X_A}{(Rt)^{0.5}} = 1.0 - 0.75\left(\frac{36.75}{45.6}\right) = 0.40$$

$$1.0 - 0.75\frac{X_C}{(Rt)^{0.5}} = 1.0 - 0.75\left(\frac{24.75}{45.6}\right) = 0.59$$

$$F_P = P\pi a^2 = \left[\frac{(62.4)(1.0)}{1728}\right][(64)(12) - 24.75]\pi 12^2$$

$= 12{,}142$ pounds

$$\frac{\lambda}{2Y_F}\left(\frac{F_R}{F_P}\right) = \frac{0.26}{(2)(1.9)}\left(\frac{F_R}{12{,}142}\right) = 5.64 \times 10^{-6} F_R$$

$$\frac{\lambda}{aY_L}\left(\frac{M_L}{F_P}\right) = \frac{0.26}{(12)(7.2)}\left(\frac{M_L}{12{,}142}\right) = 2.48 \times 10^{-7} M_L$$

$$\frac{\lambda}{aY_C}\left(\frac{M_C}{F_P}\right) = \frac{0.26}{(12)(13.6)}\left(\frac{M_C}{12{,}142}\right) = 1.31 \times 10^{-7} M_C$$

P.2.9.2.5 Determine the limiting piping loads.

In SI units:

For M_L = 0 and M_C = 0,

For F_R, $\frac{\lambda}{2Y_F}\left(\frac{F_R}{F_P}\right) = 1.29 \times 10^{-6} F_R \le 0.4$

Therefore,

$$F_{R\max} = \frac{0.4}{1.29 \times 10^{-6}}$$ = 310,000 N (tension at A controls)

For M_L = 0 and F_R = 0,

For M_C, $\frac{\lambda}{aY_C}\left(\frac{M_C}{F_P}\right) = 1.19 \times 10^{-9} M_C \le 0.59$

Therefore,

$$M_{C\max} = \frac{0.59}{1.19\times10^{-9}} = 4.96\times10^{8} \text{ N-mm (tension at C′ controls)}$$

For F_R = 0 and M_C = 0,

$$\text{For } M_L, \quad \frac{\lambda}{aY_L}\left(\frac{M_L}{F_P}\right) = 2.22\times10^{-9}M_L \le 0.4$$

Therefore,

$$M_{L\max} = \frac{0.4}{2.22\times10^{-9}} = 1.80\times10^{8} \text{ N-mm (tension at A controls)}$$

In USC units:

For M_L = 0 and M_C = 0,

$$\text{For } F_R, \quad \frac{\lambda}{2Y_F}\left(\frac{F_R}{F_P}\right) = 5.64\times10^{-6}F_R \le 0.4$$

Therefore,

$$M_{L\max} = \frac{0.4}{5.64\times10^{-6}} = 70{,}900 \text{ lbf (tension at A controls)}$$

For M_L = 0 and F_R = 0,

$$\text{For } M_C, \quad \frac{\lambda}{aY_C}\left(\frac{M_C}{F_P}\right) = 1.31\times10^{-7}M_C \le 0.59$$

Therefore,

$$M_{C\max} = \frac{0.59}{1.31\times10^{-7}} = 4.50\times10^{6} \text{ in.-lbf (tension at C′ controls)}$$

For F_R = 0 and M_C = 0,

$$\text{For } M_L, \quad \frac{\lambda}{aY_L}\left(\frac{M_L}{F_P}\right) = 2.48\times10^{-7}M_L \le 0.4$$

Therefore,

$$M_{L\max} = \frac{0.4}{2.48\times10^{-7}} = 1.61\times10^{6} \text{ in.-lbf (tension at A controls)}$$

P.2.9.3 Summary

The limiting piping loads are as follows:

In SI units:

$F_{R\max}$ = 310,000 N (tension at A controls)

$M_{C\max}$ = 4.96×10^8 N-mm (tension at C′ controls)

$M_{L\max}$ = 1.8×10^8 N-mm (tension at A controls)

In USC units:

$F_{R\max}$ = 70,900 lbf (tension at A controls)

$M_{C\max}$ = 4.50×10^6 in.-lbf (tension at C′ controls)

$M_{L\max}$ = 1.61×10^6 in.-lbf (tension at A controls)

NOTE This section is based on the paper “Analysis of Nozzle Loads in API 650 Tanks” [32]

[32] Analysis of Loads for Nozzles in API 650 Tanks, M. Lengsfeld, K.L. Bardia, J. Taagepera, K. Hathaitham, D.G. LaBounty, M.C. Lengsfeld. Paper PVP-Vol 430, ASME, New York, 2001.

Annex S
(normative)

Austenitic Stainless Steel Storage Tanks

S.1 Scope

S.1.1 This Annex covers materials, design, fabrication, erection, and testing requirements for vertical, cylindrical, aboveground, closed- and open-top, welded, austenitic stainless steel storage tanks constructed of material grades 201-1, 201LN, 304, 304L, 316, 316L, 317, and 317L. This Annex does not cover stainless steel clad plate or strip-lined construction.

- **S.1.2** This Annex applies only to tanks in nonrefrigerated services with a maximum design temperature not exceeding 260 °C (500 °F). Tanks designed to this Annex shall be assigned a maximum design temperature no less than 40 °C (100 °F). It is cautioned that exothermic reactions occurring inside unheated storage tanks can produce temperatures exceeding 40 °C (100 °F).

S.1.3 The minimum thicknesses specified in this Annex are corroded thicknesses unless otherwise stated.

S.1.4 This Annex states only the requirements that differ from the basic rules in this standard. For requirements not stated, the basic rules must be followed.

S.2 Materials

S.2.1 Selection and Ordering

S.2.1.1 Materials shall be in accordance with Table S.1a and Table S.1b.

- **S.2.1.2** Selection of the type/grade of stainless steel depends on the service and environment to which it will be exposed and the effects of fabrication processes (see S.4.3.2 and S.4.4.3). The Purchaser shall specify the type/grade.

S.2.1.3 External structural attachments may be carbon steels meeting the requirements of Section 4 of this standard, providing they are protected from corrosion and the design and details consider the dissimilar properties of the materials used. (This does not include shell, roof, or bottom openings and their reinforcement.) Carbon steel attachments (e.g. clips for scaffolding) shall not be welded directly to any internal surface of the tank. For stainless steel tanks subject to external fire impingement, the use of galvanizing on attachments, including ladders and platforms, is not recommended.

- ### S.2.2 Packaging

Packaging stainless steel for shipment is important to its corrosion resistance. Precautions to protect the surface of the material depend on the surface finish supplied and may vary among Manufacturers. Normal packaging methods may not be sufficient to protect the material from normal shipping damage. If the intended service requires special precautions, special instructions shall be specified by the Purchaser.

S.2.3 Impact Testing

Impact tests are not required for austenitic stainless steel base metals.

Table S.1a—ASTM Materials for Stainless Steel Components (SI)

Plates and Structural Members (Note 1)	Piping and Tubing—Seamless or Welded (Note 2)	Forgings (Notes 2, 3)	Bolting and Bars (Notes 4, 5)
A240M, Type 201-1	A213M, Grade TP 201	A182M, Grade F 304	A193M, Class 1, Grades B8, B8A, and B8M
A240M, Type 201LN	A213M, Grade TP 304	A182M, Grade F 304L	A194M, Grades B8, B8A, B8M, and B8MA
A240M, Type 304	A213M, Grade TP 304L	A182M, Grade F 316	A320M, Grades B8, B8A, B8M, and B8MA
A240M, Type 304L	A213M, Grade TP 316	A182M, Grade F 316L	A479M, Type 304
A240M, Type 316	A213M, Grade TP 316L	A182M, Grade F 317	A479M, Type 304L
A240M, Type 316L	A213M, Grade TP 317	A182M, Grade F 317L	A479M, Type 316
A240M, Type 317	A213M, Grade TP 317L		A479M, Type 316L
A240M, Type 317L	A312M, Grade TP 304		A479M, Type 317
	A312M, Grade TP 304L		
	A312M, Grade TP 316		
	A312M, Grade TP 316L		
	A312M, Grade TP 317		
	A312M, Grade TP 317L		
	A358M, Grade 304		
	A358M, Grade 304L		
	A358M, Grade 316		
	A358M, Grade 316L		
	A403M, Class WP 304		
	A403M, Class WP 304L		
	A403M, Class WP 316		
	A403M, Class WP 316L		
	A403M, Class WP 317		
	A403M, Class WP 317L		

NOTE 1 Unless otherwise specified by the Purchaser, plate, sheet, or strip shall be furnished with a No. 1 finish and shall be hot-rolled, annealed, and descaled.

NOTE 2 Carbon steel flanges and/or stub ends may be used by agreement between the Purchaser and the Manufacturer, providing the design and details consider the dissimilar properties of the materials used and are suitable for the intended service.

NOTE 3 Castings shall not be used unless specified by the Purchaser. If specified, castings shall meet ASTM A351 and shall be inspected in accordance with ASME *Boiler and Pressure Vessel Code*, Section VIII, Division 1, Annex 7.

NOTE 4 All bars in contact with the product shall be furnished in the hot-rolled, annealed, and descaled condition.

NOTE 5 Other bolting materials may be used by agreement between the Purchaser and the Manufacturer.

Table S.1b—ASTM Materials for Stainless Steel Components (USC)

Plates and Structural Members (Note 1)	Piping and Tubing—Seamless or Welded (Note 2)	Forgings (Notes 2, 3)	Bolting and Bars (Notes 4, 5)
A240, Type 201-1	A213, Grade TP 201	A182, Grade F 304	A193, Class 1, Grades B8, B8A, and B8M
A240, Type 201LN	A213, Grade TP 304	A182, Grade F 304L	A194, Grades 8, 8A, 8M, and 8MA
A240, Type 304	A213, Grade TP 304L	A182, Grade F 316	A320, Grades B8, B8A, B8M, and B8MA
A240, Type 304L	A213, Grade TP 316	A182, Grade F 316L	A479, Type 304
A240, Type 316	A213, Grade TP 316L	A182, Grade F 317	A479, Type 304L
A240, Type 316L	A213, Grade TP 317	A182, Grade F 317L	A479, Type 316
A240, Type 317	A213, Grade TP 317L		A479, Type 316L
A240, Type 317L	A312, Grade TP 304		A479, Type 317
A276, Type 201	A312, Grade TP 304L		
A276, Type 304	A312, Grade TP 316		
A276, Type 304L	A312, Grade TP 316L		
A276, Type 316	A312, Grade TP 317		
A276, Type 316L	A312, Grade TP 317L		
A276, Type 317	A358, Grade 304		
	A358, Grade 304L		
	A358, Grade 316		
	A358, Grade 316L		
	A403, Class WP 304		
	A403, Class WP 304L		
	A403, Class WP 316		
	A403, Class WP 316L		
	A403, Class WP 317		
	A403, Class WP 317L		

NOTE 1 Unless otherwise specified by the Purchaser, plate, sheet, or strip shall be furnished with a No. 1 finish and shall be hot-rolled, annealed, and descaled.

NOTE 2 Carbon steel flanges and/or stub ends may be used by agreement between the Purchaser and the Manufacturer, providing the design and details consider the dissimilar properties of the materials used and are suitable for the intended service.

NOTE 3 Castings shall not be used unless specified by the Purchaser. If specified, castings shall meet ASTM A351 and shall be inspected in accordance with ASME *Boiler and Pressure Vessel Code*, Section VIII, Division 1, Annex 7.

NOTE 4 All bars in contact with the product shall be furnished in the hot-rolled, annealed, and descaled condition.

NOTE 5 Other bolting materials may be used by agreement between the Purchaser and the Manufacturer.

S.3 Design

• S.3.1 Tank Bottoms

S.3.1.1 Shell-to-Bottom Fillet Welds

The attachment weld between the bottom edge of the lowest course shell plate and the bottom plate shall comply with the following values:

Nominal Thickness of Shell Plate		Minimum Size of Fillet Weld	
(mm)	(in.)	(mm)	(in.)
5	0.1875	5	3/16
>5 to 25	>0.1875 to 1.0	6	1/4
>25 to 45	>1.0 to 1.75	8	5/16

S.3.1.2 Bottom Plates

All bottom plates shall have a corroded thickness of not less than 5 mm (3/16 in.). Bottom plates which weld to shell plates thicker than 25 mm (1.0 in.) shall have a corroded thickness of not less than 6 mm (1/4 in.). Unless otherwise agreed to by the Purchaser, all rectangular and sketch plates (bottom plates on which the shell rests that have one end rectangular) shall have a minimum nominal width of not less than 1200 mm (48 in.).

S.3.1.3 Annular Bottom Plates

Butt-welded annular bottom plates meeting the requirements of 5.5.2 through 5.5.5 are required when either the bottom shell course maximum product stress is greater than 160 MPa (23,200 lbf/in.^{2}) or the bottom shell course maximum test stress is greater than 172 MPa (24,900 lbf/in.^{2}).

• S.3.2 Shell Design

S.3.2.1 General

S.3.2.1.1 The required nominal shell thickness shall not be less than the greatest of the design shell thickness plus corrosion allowance, hydrostatic test shell thickness, or the nominal thickness listed in 5.6.1.1 (note 4 does not apply).

S.3.2.1.2 Unless otherwise agreed to by the Purchaser, the shell plates shall have a minimum width of 1200 mm (48 in.).

S.3.2.2 Shell Thickness Calculation

The requirements of 5.6 shall be followed, except as modified in S.3.2.2.1, S.3.2.2.2, and S.3.2.2.3.

S.3.2.2.1 Allowable stresses for all shell thickness calculation methods are provided in Table S.2a and Table S.2b.

S.3.2.2.2 Annex A is not applicable.

S.3.2.2.3 The following formulas for design shell thickness and test shell thickness may alternatively be used for tanks 60 m (200 ft) in diameter and smaller.

In SI units:

$$t_d = \frac{4.9D(H-0.3)G}{(S_d)E} + CA$$

$$t_t = \frac{4.9D(H-0.3)}{(S_t)(E)}$$

where

t_d = design shell thickness, in mm;

t_t = hydrostatic test shell thickness, in mm;

D = nominal diameter of tank, in m (see 5.6.1.1);

H = design liquid level, in m (see 5.6.3.2);

• G = specific gravity of the liquid to be stored, as specified by the Purchaser;

E = joint efficiency, 1.0, 0.85, or 0.70 (see Table S.4);

• CA = corrosion allowance, in mm, as specified by the Purchaser (see 5.3.2);

S_d = allowable stress for the design condition, in MPa (see Table S.2a and Table S.2b);

S_t = allowable stress for hydrostatic test condition, in MPa (see Table S.2a and Table S.2b).

In USC units:

$$t_d = \frac{2.6D(H-1)G}{(S_d)E} + CA$$

$$t_t = \frac{2.6D(H-1)}{(S_t)(E)}$$

where

t_d = design shell thickness, in inches;

t_t = hydrostatic test shell thickness, in inches;

D = nominal diameter of tank, in ft (see 5.6.1.1);

H = design liquid level, in ft (see 5.6.3.2);

• G = specific gravity of the liquid to be stored, as specified by the Purchaser;

E = joint efficiency, 1.0, 0.85, or 0.70 (see Table S.4);

• CA = corrosion allowance, in inches, as specified by the Purchaser (see 5.3.2);

Sd = allowable stress for the design condition, in lbf/in.^{2} (see Table S.2a and Table S.2b);

St = allowable stress for hydrostatic test condition, in lbf/in.^{2} (see Table S.2a and Table S.2b).

NOTE The allowable stresses recognize the increased toughness of stainless steels over carbon steels and the relatively low yield/tensile ratios of the stainless steels. The increased toughness permits designing to a higher proportion of the yield strength, however, the Manufacturer and Purchaser shall be aware that this may result in permanent strain (see Table S.2a and Table S.2b).

S.3.3 Shell Openings

S.3.3.1 The minimum nominal thickness of connections and openings shall be as follows:

Size of Nozzle	Minimum Nominal Neck Thickness
NPS 2 and less	Schedule 80S
NPS 3 and NPS 4	Schedule 40S
Over NPS 4	6 mm (0.25 in.)

NOTE Reinforcement requirements of 5.7 must be maintained.

S.3.3.2 Thermal stress relief requirements of 5.7.4 are not applicable.

S.3.3.3 Shell manholes shall be in conformance with 5.7.5 except that the corroded thickness requirements of bolting flange and cover plate shall be multiplied by the greater of (a) the ratio of the material yield strength at 40 °C (100 °F) to the material yield strength at the maximum design temperature, or (b) the ratio of 205 MPa (30,000 psi) to the material yield strength at the maximum design temperature.

S.3.3.4 As an alternative to S.3.3.3, plate ring flanges may be designed in accordance with API Standard 620 rules using the allowable stresses given in Table S.3a and Table S.3b.

S.3.3.5 Allowable weld stresses for shell openings shall conform to 5.7.2.8 except S_d = the maximum allowable design stress (the lesser value of the base materials joined) permitted by Table S.2a and Table S.2b.

S.3.4 Roof Design and Roof Manholes

S.3.4.1 The yield strength given in Table S.5a and Table S.5b shall be used for F_y in 5.10.4.4.

S.3.4.2 All stainless steel components of the roof manhole shall have a nominal thickness of not less than 5 mm ($^3/_{16}$ in.).

S.3.4.3 In 5.10.3.1 the required structural specification for stress limitations shall be modified to ASCE 8 Specification for the Design of Cold-Formed Stainless Steel Structural Members. The portion of the specification Annex D entitled, “Allowable Stress Design,” shall be used in determining allowable unit stress.

S.3.4.4 In 5.10.3.4 for columns, the AISC reference shall be modified to ASCE 8. Modified allowable stress values for l/r > 120 are not applicable.

S.3.5 Annex F—Modifications

In F.2, the shell thickness shall be as specified in S.3.2 except that the pressure P (in kPa [in. of water]) divided by 9.8G (12G) shall be added to the design liquid height in meters (ft).

S.3.6 Annex M—Modifications

S.3.6.1 Annex M requirements shall be met for stainless steel tanks with a maximum design temperature over 40 °C (100 °F) as modified by S.3.6.2 through S.3.6.7.

S.3.6.2 Allowable shell stress shall be in accordance with Table S.2a and Table S.2b.

S.3.6.3 In M.3.5, the requirements of 5.7.7 for flush-type cleanout fittings and of 5.7.8 for flush-type shell connections shall be modified. The thickness of the bottom reinforcing plate, bolting flange, and cover plate shall be multiplied by the greater of (a) the ratio of the material yield strength at 40 °C (100 °F) to the material yield strength at the maximum design temperature, or (b) the ratio of 205 MPa (30,000 psi) to the material yield strength at the maximum design temperature. (See Table S.5a and Table S.5b for yield strength.)

S.3.6.4 In M.3.6, the stainless steel structural allowable stress shall be multiplied by the ratio of the material yield strength at the maximum design temperature to the material yield strength at 40 °C (100 °F). (See Tables S.5a and S.5b for yield strength.)

S.3.6.5 In M.5.1, the requirements of 5.10.5 and 5.10.6 shall be multiplied by the ratio of the material modulus of elasticity at 40 °C (100 °F) to the material modulus of elasticity at the maximum design temperature. (See Tables S.6a and S.6b for modulus of elasticity.)

S.3.6.6 In M.6 (the equation for the maximum height of unstiffened shell in 5.9.7.1), the maximum height shall be multiplied by the ratio of the material modulus of elasticity at the maximum design temperature of 40 °C (100 °F).

S.4 Fabrication and Construction

S.4.1 General

Special precautions must be observed to minimize the risk of damage to the corrosion resistance of stainless steel. Stainless steel shall be handled so as to minimize contact with iron or other types of steel during all phases of fabrication, shipping, and construction. The following sections describe the major precautions that should be observed during fabrication and handling.

S.4.2 Storage

Storage should be under cover and well removed from shop dirt and fumes from pickling operations. If outside storage is necessary, provisions should be made for rainwater to drain and allow the material to dry. Stainless steel should not be stored in contact with carbon steel. Materials containing chlorides, including foods, beverages, oils, and greases, should not come in contact with stainless steel.

S.4.3 Thermal Cutting

S.4.3.1 Thermal cutting of stainless steel shall be by the iron powder burning carbon arc or the plasma-arc method.

• **S.4.3.2** Thermal cutting of stainless steel may leave a heat-affected zone and intergranular carbide precipitates. This heat-affected zone may have reduced corrosion resistance unless removed by machining, grinding, or solution annealing and quenching. The Purchaser shall specify if the heat-affected zone is to be removed.

S.4.4 Forming

S.4.4.1 Stainless steels shall be formed by a cold, warm, or hot forming procedure that is noninjurious to the material.

Table S.2a—Allowable Stresses for Tank Shells (SI)

Type	Min. Yield MPa	Min. Tensile MPa	Allowable Stress (S_d) (in MPa) for Maximum Design Temperature Not Exceeding					
			40 °C	90 °C	150 °C	200 °C	260 °C	S_t Ambient
201-1	260	515	155	136	125	121	—	234
201LN	310	655	197	172	153	145	143	279
304	205	515	155	155	140	128	121	186
304L	170	485	145	132	119	109	101	155
316	205	515	155	155	145	133	123	186
316L	170	485	145	131	117	107	99	155
317	205	515	155	155	145	133	123	186
317L	205	515	155	155	145	133	123	186

NOTE 1 S_d may be interpolated between temperatures.

NOTE 2 The design stress shall be the lesser of 0.3 of the minimum tensile strength or 0.9 of the minimum yield strength. The factor of 0.9 of yield corresponds to a permanent strain of 0.10 %. When a lower level of permanent strain is desired, the Purchaser shall specify a reduced yield factor in accordance with Table Y-2 of ASME Section II, Part D. The yield values at the different maximum design temperatures can be obtained from Table S.5a.

NOTE 3 For dual-certified materials (e.g. ASTM A182M/A182 Type 304L/304), use the allowable stress of the grade specified by the Purchaser.

Table S.2b—Allowable Stresses for Tank Shells (USC)

Type	Min. Yield psi	Min. Tensile psi	Allowable Stress (S_d) (in psi) for Maximum Design Temperature Not Exceeding					
			100 °F	200 °F	300 °F	400 °F	500 °F	S_t Ambient
201-1	38,000	75,000	22,500	19,700	18,100	17,500	--	34,200
201LN	45,000	95,000	28,500	24,900	22,200	21,100	20,700	40,500
304	30,000	75,000	22,500	22,500	20,300	18,600	17,500	27,000
304L	25,000	70,000	21,000	19,200	17,200	15,800	14,700	22,500
316	30,000	75,000	22,500	22,500	21,000	19,300	17,900	27,000
316L	25,000	70,000	21,000	19,000	17,000	15,500	14,300	22,500
317	30,000	75,000	22,500	22,500	21,000	19,300	17,900	27,000
317L	30,000	75,000	22,500	22,500	21,000	19,300	17,900	27,000

NOTE 1 S_d may be interpolated between temperatures.

NOTE 2 The design stress shall be the lesser of 0.3 of the minimum tensile strength or 0.9 of the minimum yield strength. The factor of 0.9 of yield corresponds to a permanent strain of 0.10 %. When a lower level of permanent strain is desired, the Purchaser shall specify a reduced yield factor in accordance with Table Y-2 of ASME Section II, Part D. The yield values at the different maximum design temperatures can be obtained from Table S.5b.

NOTE 3 For dual-certified materials (e.g. ASTM A182M/A182 Type 304L/304), use the allowable stress of the grade specified by the Purchaser.

Table S.3a—Allowable Stresses for Plate Ring Flanges (SI)

	Allowable Stress (S_t) (in MPa) for Maximum Design Temperature Not Exceeding				
Type	**40 °C**	**90 °C**	**150 °C**	**200 °C**	**260 °C**
201-1	155	133	115	104	--
201LN	197	167	151	143	138
304	140	115	103	95	89
304L	117	99	88	81	75
316	140	119	107	99	92
316L	117	97	87	79	73
317	140	119	108	99	92
317L	140	119	108	99	92

NOTE 1 Allowable stresses may be interpolated between temperatures.

NOTE 2 The allowable stresses are based on a lower level of permanent strain.

NOTE 3 The design stress shall be the lesser of 0.3 of the minimum tensile strength or $^2/_3$ of the minimum yield strength.

• NOTE 4 For dual-certified materials (e.g. ASTM A182M/A182 Type 304L/304), use the allowable stress of the grade specified by the Purchaser.

Table S.3b—Allowable Stresses for Plate Ring Flanges (USC)

	Allowable Stress (S_t) (in psi) for Maximum Design Temperature Not Exceeding				
Type	**100 °F**	**200 °F**	**300 °F**	**400 °F**	**500 °F**
201-1	22,500	19,300	16,700	15,100	--
201LN	28,500	24,200	21,900	20,700	20,000
304	20,000	16,700	15,000	13,800	12,900
304L	16,700	14,300	12,800	11,700	10,900
316	20,000	17,200	15,500	14,300	13,300
316L	16,700	14,100	12,600	11,500	10,600
317	20,000	17,300	15,600	14,300	13,300
317L	20,000	17,300	15,600	14,300	13,300

NOTE 1 Allowable stresses may be interpolated between temperatures.

NOTE 2 The allowable stresses are based on a lower level of permanent strain.

NOTE 3 The design stress shall be the lesser of 0.3 of the minimum tensile strength or $^2/_3$ of the minimum yield strength.

• NOTE 4 For dual-certified materials (e.g. ASTM A182M/A182 Type 304L/304), use the allowable stress of the grade specified by the Purchaser.

Table S.4—Joint Efficiencies

Joint Efficiency	Radiograph Requirements
1.0	Radiograph per 8.1.2
0.85	Radiograph per A.5.3
0.70	No radiography required

Table S.5a—Yield Strength Values in MPa (SI)

Type	Yield Strength (in MPa) for Maximum Design Temperature Not Exceeding				
	40 °C	90 °C	150 °C	200 °C	260 °C
201-1	260	199	172	157	—
201LN	310	250	227	214	207
304	205	170	155	143	134
304L	170	148	132	121	113
316	205	178	161	148	137
316L	170	145	130	119	110
317	205	179	161	148	138
317L	205	179	161	148	138

NOTE 1 Interpolate between temperatures.

NOTE 2 Reference: Table Y-1 of ASME Section II, Part D.

Table S.5b—Yield Strength Values in psi (USC)

Type	Yield Strength (in psi) for Maximum Design Temperature Not Exceeding				
	100 °F	200 °F	300 °F	400 °F	500 °F
201-1	38,000	28,900	25,000	22,700	—
201LN	45,000	36,300	32,900	31,100	30,000
304	30,000	25,000	22,500	20,700	19,400
304L	25,000	21,400	19,200	17,500	16,400
316	30,000	25,800	23,300	21,400	19,900
316L	25,000	21,100	18,900	17,200	15,900
317	30,000	25,900	23,400	21,400	20,000
317L	30,000	25,900	23,400	21,400	20,000

NOTE 1 Interpolate between temperatures.

NOTE 2 Reference: Table Y-1 of ASME Section II, Part D.

Table S.6a—Modulus of Elasticity at the Maximum Design Temperature (SI)

Maximum Design Temperature (°C) Not Exceeding	Modulus of Elasticity (MPa)
40	194,000
90	190,000
150	186,000
200	182,000
260	179,000
NOTE Note: Interpolate between temperatures.	

Table S.6b—Modulus of Elasticity at the Maximum Design Temperature (USC)

Maximum Design Temperature (°F) Not Exceeding	Modulus of Elasticity (psi)
100	28,100,000
200	27,500,000
300	27,000,000
400	26,400,000
500	25,900,000
NOTE Interpolate between temperatures.	

S.4.4.2 Stainless steels may be cold formed, providing the maximum strain produced by such forming does not exceed 10 % and control of forming spring-back is provided in the forming procedure.

• **S.4.4.3** Warm forming at 540 °C (1000 °F) to 650 °C (1200 °F) may cause intergranular carbide precipitation in 304, 316, and 317 grades of stainless steel. Unless stainless steel in this sensitized condition is acceptable for the service of the equipment, it will be necessary to use 304L, 316L, or 317L grades or to solution anneal and quench after forming. Warm forming shall be performed only with agreement of the Purchaser.

S.4.4.4 Hot forming, if required, may be performed within a temperature range of 900 °C (1650 °F) to 1200 °C (2200 °F).

S.4.4.5 Forming at temperatures between 650 °C (1200 °F) and 900 °C (1650 °F) is not permitted.

S.4.5 Cleaning

• **S.4.5.1** When the Purchaser requires cleaning to remove surface contaminants that may impair the normal corrosion resistance, it shall be done in accordance with ASTM A380, unless otherwise specified. Any additional cleanliness requirements for the intended service shall be specified by the Purchaser.

S.4.5.2 When welding is completed, flux residue and weld spatter shall be removed mechanically using stainless steel tools.

S.4.5.3 Removal of excess weld metal, if required, shall be done with a grinding wheel or belt that has not been previously used on other metals.

S.4.5.4 Chemical cleaners used shall not have a detrimental effect on the stainless steel and welded joints and shall be disposed of in accordance with laws and regulations governing the disposal of such chemicals. The use of chemical cleaners shall always be followed by thorough rinsing with water and drying (see S.4.9).

S.4.6 Blast Cleaning

If blast cleaning is necessary, it shall be done with sharp acicular grains of sand or grit containing not more than 2 % by weight iron as free iron or iron oxide. Steel shot or sand used previously to clean nonstainless steel is not permitted.

S.4.7 Pickling

If pickling of a sensitized stainless steel is necessary, an acid mixture of nitric and hydrofluoric acids shall not be used. After pickling, the stainless steel shall be thoroughly rinsed with water and dried.

S.4.8 Passivation or Iron Freeing

When passivation or iron freeing is specified by the Purchaser, it may be achieved by treatment with nitric or citric acid. The use of hydrofluoric acid mixtures for passivation purposes is prohibited for sensitized stainless.

S.4.9 Rinsing

S.4.9.1 When cleaning and pickling or passivation is required, these operations shall be followed immediately by rinsing, not allowing the surfaces to dry between operations.

S.4.9.2 Rinse water shall be potable and shall not contain more than 200 parts per million chloride at temperatures below 40 °C (100 °F), or no more than 100 parts per million chloride at temperatures above 40 °C (100 °F) and below 65 °C (150 °F), unless specified otherwise by the Purchaser.

S.4.9.3 Following final rinsing, the equipment shall be completely dried.

S.4.10 Hydrostatic Testing

S.4.10.1 The rules of 7.3.5 apply to hydrostatic testing except that the penetrating oil test in 7.3.5(2) shall be replaced with liquid penetrant examination conducted by applying the penetrant on one side and developer on the opposite side of the welds. The dwell time must be at least one hour.

S.4.10.2 The materials used in the construction of stainless steel tanks may be subject to severe pitting, cracking, or rusting if they are exposed to contaminated test water for extended periods of time. The Purchaser shall specify a minimum quality of test water that conforms to the following requirements:

a) Unless otherwise specified by the Purchaser, water used for hydrostatic testing of tanks shall be potable and treated, containing at least 0.2 parts per million free chlorine.

b) Water shall be substantially clean and clear.

c) Water shall have no objectionable odor (that is, no hydrogen sulfide).

d) Water pH shall be between 6 and 8.3.

e) Water temperature shall be below 50 °C (120 °F).

f) The chloride content of the water shall be below 50 parts per million, unless specified otherwise by the Purchaser.

S.4.10.3 When testing with potable water, the exposure time shall not exceed 21 days, unless specified otherwise by the Purchaser.

S.4.10.4 When testing with other fresh waters, the exposure time shall not exceed 7 days.

S.4.10.5 Upon completion of the hydrostatic test, water shall be completely drained. Wetted surfaces shall be washed with potable water when nonpotable water is used for the test and completely dried. Particular attention shall be given to low spots, crevices, and similar areas. Hot air drying is not permitted.

S.4.11 Welding

S.4.11.1 Tanks and their structural attachments shall be welded by any of the processes permitted in 7.2.1.1 or by the plasma arc process. Galvanized components or components coated with zinc-rich coating shall not be welded directly to stainless steel.

S.4.11.2 Weld procedure qualifications for stainless steel alloys shall demonstrate strength matching the base metals joined (i.e. 3XX stainless shall be welded with a matching E3XX or ER3XX filler metal).

S.4.11.3 For the 300 series stainless steel materials, the filler metal mechanical properties and chemistry shall both match the type of base metals joined (i.e. 3XX stainless shall be welded with a matching E3XX or ER3XX filler metal).

S.4.11.4 For the 200 series stainless steel materials, filler metals of matching composition are not available. The Manufacturer, with approval of the Purchaser, shall select the appropriate filler metal, taking into account the corrosion resistance and mechanical properties required for the joint.

S.4.11.5 Dissimilar material welds (stainless steels to carbon steels) shall use filler metals of E309/ER309 or higher alloy content.

S.4.11.6 Two stainless steel plates identical in material type may be welded together prior to erection in order to form a single shell plate subassembly. Plates welded together shall have thicknesses within 1.6 mm ($^1/_{16}$ in.) of each other with the maximum plate thickness being 13 mm ($^1/_2$ in.). No more than two plates shall be used to form one subassembly. Vertical edges of the pair of plates comprising a subassembly shall be aligned. The vertical joint offset requirement of 5.1.5.2 (b) shall be applied only between the subassembly and plates above and below it. The subassembly shall conform to the dimensional tolerances contained in Section 7 and shall be subjected to inspection requirements contained in Section 8. At least 25 % of vertical spot radiographs shall be made at the subassembly horizontal weld to field vertical weld intersection. All welding procedure specifications shall be in accordance with Section 9.

S.4.12 Welding Procedure and Welder Qualifications

Impact tests are not required for austenitic stainless steel weld metal and heat-affected zones.

S.4.13 Postweld Heat Treatment

Postweld heat treatment of austenitic stainless steel materials need not be performed unless specified by the Purchaser.

S.4.14 Examination of Welds

S.4.14.1 Radiographic Examination of Butt-Welds

Radiographic examination of butt-welds shall be in accordance with 8.1 and Table S.4.

S.4.14.2 Examination of Welds by Liquid Penetrant Method

The following component welds shall be examined by the liquid penetrant method before the hydrostatic test of the tank:

a) the shell-to-bottom inside attachment weld;

b) all welds of opening connections in tank shell that are not completely radiographed, including nozzle and manhole neck welds and neck-to-flange welds;

c) all welds of attachments to shells, such as stiffeners, compression rings, clips, and other nonpressure parts for which the thickness of both parts joined is greater than 19 mm ($^3/_4$ in.);

d) all butt-welded joints in tank annular plates on which backing strips are to remain.

S.5 Marking

Brazing shall be deleted from 10.1.2.

S.6 Annexes

The following Annexes are modified for use with austenitic stainless steel storage tanks.

a) Annex A is not applicable to tanks built to this Annex, except for the radiography requirements of A.5.3 subject to the joint efficiency used.

b) Annex C may be used; however, the Purchaser shall identify all materials of construction.

c) Annex F is modified as outlined in S.3.5 of this Annex.

d) Annex J may be used, except the nominal shell thickness for all tank diameters shall not be less than 5 mm ($^3/_{16}$ in.).

e) Annex K is not applicable to tanks built to this Annex.

f) Annex M is modified as outlined in S.3.6 of this Annex.

g) Annex N is not applicable.

h) Annex O may be used; however, the structural members of Table O.1a and Table O.1b shall be of an acceptable grade of material.

i) All other Annexes may be used without modifications.

Annex SC
(normative)

Stainless and Carbon Steel Mixed Materials Storage Tanks

SC.1 Scope

SC.1.1 This Annex covers materials, design, fabrication, erection, and testing requirements for vertical, cylindrical, aboveground, closed- and open-top, welded, storage tanks constructed with stainless steel and carbon steel. Generally, in this Annex the term stainless steel includes austenitic or duplex unless noted otherwise. Stainless steel and carbon steel may be used in the same tank for shell rings, bottom plates, roof structure and other parts of a tank to provide product storage for conditions that require only certain portions of the tanks to provide added corrosion resistance. These tanks are mixed material tanks. Stainless steel and carbon steel plates may be mixed in the bottom, roof or within any shell course. This Annex does not cover stainless steel clad plate or strip lined construction.

SC.1.2 This Annex applies to tanks in non-refrigerated services with a maximum design temperature not exceeding 260 °C (500 °F). For the purposes of this Annex, the design temperature shall be the maximum design temperature as specified by the Purchaser. It is cautioned that exothermic reactions occurring inside unheated storage tanks can produce temperatures exceeding 40 °C (100 °F).

SC.1.3 This Annex states only the requirements that differ from the basic rules in this standard. For requirements not stated, the basic rules must be followed including Annex S and Annex X as applicable. References to paragraphs in this Annex shall be to the basic document unless stipulated otherwise.

SC.1.4 For limitations due to thermal effects see S.3.6 and X.3.7.

SC.1.5 The nameplate of the tank shall indicate that the tank is in accordance with this Annex by the addition of Annex SC to the information required by 10.1.1. In addition, the nameplate shall be marked with the maximum design temperature in the space indicated in Figure 10.1.

SC.2 Materials

SC.2.1 Materials shall be in accordance with Section 4, Annex S, and Annex X.

• **SC.2.2** Selection of the type/grade of stainless steel and carbon steel for mixed material tanks depends on the service and environment to which it will be exposed and the effects of fabrication processes. (S.4.3.2, S.4.4.3, and X.2.1.1) The Purchaser shall select the type/grade. The Purchaser shall also specify which components shall be stainless steel.

SC.2.3 Components of a tank including shell, roof, bottom or bottom openings and their reinforcement may be carbon steels meeting the requirements of Section 4, provided they are protected from corrosion and the design and details consider the dissimilar properties of the materials used. Carbon steel attachments (e.g., clips for scaffolding) shall not be welded directly to any internal stainless steel tank surface.

SC.2.4 Impact tests are not required for austenitic stainless steel base metals. See X.2.3.2 for impact testing requirements for duplex stainless steel. Carbon steels in a mixed material tank shall require impact testing in accordance with the basic document.

SC.2.5 Welding of stainless steel to carbon steel shall use stainless steel electrodes appropriate for the type/grade of stainless steel used and the welding process employed.

--`,,`,,`,`,,`,,,,,,`,`,,`-`-`,,`,,`,`,,`---

SC.3 Design

A structural analysis of the entire tank structure is required to adequately predict stresses due to differential movements if item a and either items b or c also apply:

a) austenitic stainless steel is joined to either carbon steel or duplex stainless steel components such as bottom to first shell course, adjacent shell courses, and roof to top shell course;

b) the design temperature exceeds 40 °C (100 °F) and the diameter exceeds 30 m (100 ft); or

c) the design temperature exceeds 93 °C (200 °F).

The structural analysis required above shall include all material properties that affect differential component expansion and necessary for adequate stress prediction.

The material combination of this paragraph applies to all other sub-paragraphs in Section SC.3. No analysis of stresses from differential movements is required for duplex stainless steel joined to carbon steel.

SC.3.1 Bottom

SC.3.1.1 When the bottom plate and first shell course are of different materials, the design shall account for differential component expansion.

SC.3.1.2 When the annular plate and first shell course are of different materials and the design temperature is greater than 40 °C (100 °F), the design shall account for differential shell component expansion. When the first shell course is carbon steel and the annular plate is stainless steel, the requirements of 5.5.1 shall apply.

SC.3.2 Shell Design

SC.3.2.1 The variable point design method shall not be used for design of mixed material tank shells.

SC.3.2.2 Austenitic stainless steel insert plates shall not be used in carbon steel or duplex stainless steel plates and carbon steel or duplex stainless steel insert plates shall not be used in austenitic stainless steel plates except when an evaluation for differential movement due to temperature is performed.

SC.3.2.3 Where adjacent shell courses are of different materials and the design temperature is greater than 40 °C (100 °F), the design shall account for differential shell course expansion with regard to out of plane bending in the carbon steel plates. Use of stiffeners or thicker carbon steel plates may be required.

SC.3.2.4 The required nominal shell thickness shall not be less than the greatest of the design shell thickness plus corrosion allowance, hydrostatic test shell thickness, or the nominal plate thickness listed in 5.6.1.1 (note 4 does not apply to the first shell courses made of stainless steel material).

SC.3.3 When the roof and shell are of different materials and the operating temperature is greater than 40 °C (100 °F), the design shall account for differential component expansion. Use of stiffeners or thicker component members may be required.

SC.3.4 Nozzles and Manways

SC.3.4.1 Reinforcement requirements of 5.7 must be maintained except insert plates shall comply with SC.3.2.2.

- **SC.3.4.2** Nozzles and manways shall be of the same material as the shell course unless otherwise specified by the Purchaser.

SC.3.4.3 Reinforcing plates for shell penetrations shall be carbon steel to carbon steel and stainless steel to stainless steel even if the nozzle material differs from the shell material.

SC.4 Miscellaneous Requirements

SC.4.1 Chemical cleaners and pickling solutions used shall not have a detrimental effect on the stainless steel or carbon steel in mixed material tanks and their welded joints. Chemical cleaners and pickling solutions shall be disposed of in accordance with laws and regulations governing the disposal of such chemicals. The use of chemical cleaners shall always be followed by thorough rinsing with potable water and drying (see S.4.9 and X.4.5).

SC.4.2 Impact tests are not required for austenitic stainless steel weld metals and heat-affected zones. Impact tests of the carbon steel or duplex stainless steel heat affected zone shall be performed when required by the basic document or Annex X.

• **SC.4.3** Postweld heat treatment of austenitic stainless steel and duplex stainless steel materials need not be performed unless specified by the Purchaser. PWHT of carbon steel components shall be performed when required by the basic document. For mixed material nozzle assemblies, the PWHT requirements of 5.7.4 are not mandatory except when specified by the Purchaser. The Purchaser is cautioned that mixed material nozzles with duplex stainless steel should not be PWHT due to the potential damaging effects of high temperature on the duplex material. The Purchaser is advised to discuss with a materials consultant or mill representative to determine what PWHT can be done for the specific material/chemistry/configuration.

SC.4.4 Surfaces of carbon steel plates shall be free of rust and scale prior to welding to stainless steel plates.

SC.4.5 At butt welds between stainless and carbon steel, at least one side of the joint shall be beveled with land not to exceed $t/3$ in order to prevent excessive weld metal dilution.

SC.4.6 Internal galvanic corrosion will occur by using mixed material construction and additional mitigation such as appropriate localized coatings should be considered.

SC.4.7 Where substantial quantities of uncoated stainless steel are welded to coated carbon steel, accelerated corrosion rates are possible at holidays in the carbon steel coating.

Annex T
(informative)

NDE Requirements Summary

Process	Welds Requiring Inspection	Reference Section
Air Test	Reinforcement plate welds inside and outside to 100 kPa (15 lbf/in.^{2}).	7.3.4
Air Test	Roofs designed to be airtight if roof seams are not vacuum-box tested.	7.3.7.1a
Air Test	Annex F roofs during hydro-test of tanks.	F.4.4
Air Test	Aluminum dome roofs if required to be gas-tight.	G.10.1.2
Air Test	Shop built tanks if not tested per 7.3.2 through 7.3.7.	J.4.2.2
Air Test	Shop fabricated compartments (pontoons). Test in shop and field.	H.6.4
Hydro	Tank shell.	7.3.6
MT	Flush-type shell connections: Nozzle-to-tank shell, Repad welds, shell-to-bottom reinforcing pad welds on the root pass, each 12.5 mm ($^1/_2$ in.) of weld, and completed weld. After stress relieving before hydro-test.	5.7.8.11
MT	Permanent attachment welds and temporary weld removal areas on Group IV, IVA, V, and VI materials.	7.2.3.5
MT	Completed welds of stress relieved assemblies before hydro-test.	7.2.3.6
MT	First pass of the internal shell-to-bottom weld unless examined by penetrating oil or PT or VB. Not required if the final weld is tested by pressure (see 7.3.4.2) or if agreed to by Purchaser and the final weld is tested by MT, PT or VB.	7.2.4.1a
MT	Final shell-to-bottom welds, inside and outside instead of MT, PT, pen. oil, or VB of the initial inside pass.	7.2.4.3c
MT	Shell-to-bottom fillet welds including the root pass, 20 mm ($^1/_2$ in.), and final surface of Annex M tanks for which the stress concentration factor of K = 2.0 is used.	M.4.2
MT	Non-structural small attachments such as insulation clips (not supports) studs and pins not welded by capacitor discharge. Unless tested by liquid penetrant.	7.2.1.11
Pen. Oil	All seams of internal floating roofs exposed to liquid or vapors unless VB tested.	H.6.2
Pen. Oil	First pass of the internal shell-to-bottom weld if approved instead of MT or PT.	7.2.4.1d
Pen. Oil	Tank shell if no water for hydrostatic test.	7.3.5
Pen. Oil	Deck seams of external floating roofs.	C.4.2
Pen. Oil	Welded shell joints above the hydrostatic test water level unless vacuum-box tested.	7.3.6.1
Pen. Oil	Compartment welds of external floating roofs not tested with internal pressure or VB.	C.3.6
PT	Permanent attachment welds and temporary weld removal areas on Group IV, IVA, V, VI materials instead of MT if approved.	7.2.3.5
PT	Welds attaching nozzles, manways, and clean out openings instead of MT if approved.	7.2.3.6
PT	First pass of the internal shell-to-bottom weld if approved instead of MT.	7.2.4.1b or c

Process	Welds Requiring Inspection	Reference Section
PT	Final shell-to-bottom welds, inside and outside instead of MT, PT, pen. oil, or VB of the initial inside pass.	7.2.4.3c
PT	All aluminum structural welds and components joined by welding.	G.11.3
PT	Stainless steel tank shell-to-bottom welds, opening connections not radiographed all welds of attachments to shells, and all butt welds of annular plates on which backing strips are to remain.	S.4.14.2
PT	Non-structural small attachments such as insulation clips (not supports) studs and pins not welded by capacitor discharge. Unless tested by magnetic particle.	7.2.1.11
RT	Shell plate butt welds unless examined by UT with Purchaser approval. RT is not required for Annex A, J, and S tanks where the Joint Efficiency of 0.7 is used.	7.3.2.1, A.5.3, S.4.14.1
RT	Butt welds of annular plates that are required by 7.5.1 or M.4.1.	8.1.2.9
RT	Flush-type shell connections: 100 % of all longitudinal butt welds in the nozzle neck and transition piece, if any, and the first circumferential butt weld in the neck closest to the shell, excluding the neck-to-flange weld.	5.7.8.11
RT	Shell vertical and horizontal welds which have intersecting openings and repads—100 % over weld length 3 times the diameter of the opening.	5.7.3.4
Tracer Gas	Entire length of bottom weld joints as an alternative to vacuum-box testing.	7.3.3.b
UT	Shell plate butt welds if approved by Purchaser.	7.3.2.1
VB	First pass of the internal shell-to-bottom weld if approved instead of MT, PT, or Pen. Oil.	7.2.4.1e
VB	Bottom welds.	7.3.4a
VB	Welds of roofs designed to be gas-tight if not air tested.	7.3.7.1
VB	All seams of internal floating roofs exposed to liquid or vapors if not tested by penetrating oil.	H.6.2
VB	Seams of flexible membrane liners for leak protection.	I.6.2
VB	Welded shell joints above the hydrostatic test water level unless tested with penetrating oil.	7.3.6.1
VB	Shell-to-bottom weld joints.	7.2.4.3c
VE	Flush type shell connections: Nozzle-to-tank shell, repad welds, shell-to-bottom reinforcing pad welds on the root pass, each 20 mm ($1/2$ in.) of weld, and completed weld. After stress relieving before hydro-test.	5.7.8.11
VE	Tack of shell butt welds left in place.	7.2.1.8
VE	Permanent attachment welds and temporary weld removal areas on Group IV, IVA, V, and VI materials.	7.2.3.5
VE	Completed welds of stress relieved assemblies before hydro-test.	7.2.3.6
VE	First pass and final weld inside and outside of the internal shell-to-bottom weld.	7.2.4.1, 7.2.4.2, 7.2.4.3
VE	All shell plate butt welds.	7.3.2.1
VE	All fillet welds including roof plate welds.	7.3.2.2

Process	Welds Requiring Inspection	Reference Section
VE	Upper side of the upper deck welds of pontoon and double deck floating roofs.	C.4.4
VE	All aluminum structural welds and components joined by welding.	G.11.3
VE	Joint fit-up of butt welds of bottoms supported by grillage and each weld pass.	I.7.4
VE	Non-structural small attachments such as insulation clips (not supports) studs and pins including those welded by capacitor discharge.	7.2.1.11
VE	Leak barrier, leak barrier penetrations, attachments to ringwalls and other appurtenances.	I.6.1
VE	Bottom welds.	7.3.3
VE	Roof welds not designed to be gas-tight.	7.3.7.2
Water	Bottom welds if not vacuum-box or tracer gas tested.	7.3.3c
Water	External floating roofs—flotation test.	C.4.3
Water	External floating roof drain pipe and hose systems with pressure.	C.4.5
Water	Aluminum dome roofs after completion.	G.10.1.1
Water	Internal floating roofs flotation test.	H.7.3

Definitions:

MT = Magnetic Particle Examination

Pen Oil = Penetrating Oil Test

PT = Liquid Penetrant Examination

RT = Radiographic Testing

VB = Vacuum-Box Testing

VE = Visual Examination

Acceptance Standards:

MT: ASME Section VIII, Annex 6 (Paragraphs 6-3, 6-4, 6-5)

PT: ASME Section VIII, Annex 8, (Paragraphs 8-3, 8-4, 8-5)

RT: ASME Section VIII, Paragraph UW-51(b)

Tracer Gas: API Standard 650, Section 8.6.11

UT: For welds examined by UT in lieu of RT, acceptance standards are in Annex U. For UT when RT is used for the requirements of 7.3.2.1, the acceptance standard is as agreed upon by the Manufacturer and Purchaser.

VB: API Standard 650, Section 8.6

VE: API Standard 650, Section 8.5

Examiner Qualifications:

MT: API Standard 650, Section 8.2.3.

PT: API Standard 650, Section 8.2.3

RT: ASNT SNT-TC-1A Level II or III. Level-I personnel may be used under the supervision of a Level II or Level III with a written procedure in accordance with ASME Section V, Article 2.

Tracer Gas: None

UT: For welds examined by UT in lieu of RT, the examiner must be ASNT-TC-1A or CP-189 Level II or Level III. For UT when RT is used for the requirements of 7.3.2.1, the required qualifications are ASNT-TC-1A Level II or Level III. A Level I may be used with restrictions—see API 650, Section 8.3.2.

VB: None

VE: None

Procedure Requirements:

MT: ASME Section V, Article 7

PT: ASME Section V, Article 6

RT: A procedure is not required. However, the examination method must comply with ASME Section V, Article 2. Acceptance standards shall be in accordance with ASME Section VIII, Paragraph UW-51(b).

UT: For shell welds examined by UT in lieu or RT, ASME, Section V, Article 4 and U.3.5. For welds when RT is used for the requirements of 7.3.2.1, ASME Section V.

VB: None

VE: None

Tracer Gas: API 650, Section 8.6.11.a.

Annex U
(normative)

Ultrasonic Examination in Lieu of Radiography

U.1 General

U.1.1 Purpose

This Annex provides detailed rules for the use of the ultrasonic examination (UT) method for the examination of tank seams as permitted by 7.3.2.1. This alternative is limited to joints where the thickness of the thinner of the two members joined is greater than or equal to 10 mm ($^3/_8$ in.).

U.1.2 Application and Extent

The provisions of 8.1 governing:

a) when adjacent plates may be regarded as the same thickness;

b) application (see 8.1.1); and

c) number and Locations (see 8.1.2);

shall apply to this ultrasonic method. When these sections refer to radiography, for purposes of this Annex, they shall be read as applied to UT.

U.2 Definitions

U.2.1
documenting
Preparation of text and/or and figures.

U.2.2
evaluation
All activities required in U.6.3 through U.6.6 to determine the acceptability of a flaw.

U.2.3
flaw
A reflector that is not geometric or metallurgical in origin that may be detectable by nondestructive examination but is not necessarily rejectable.

U.2.4
flaw categorization
Whether a flaw is a surface flaw or is a subsurface flaw (see U.6.4). Note that a flaw need not be surface-breaking to be categorized as a surface flaw.

U.2.5
flaw characterization
The process of quantifying the size, location and shape of a flaw. See U.6.3 for size and location. The only shape characterization required by this Annex is applied to the results of supplemental surface examination by MT or PT (see U.6.6.2).

U.2.6
indication
That which marks or denotes the presence of a reflector.

U.2.7
interpretation
The determination of whether an indication is relevant or non-relevant. i.e. whether it originates from a geometric or metallurgical feature or conversely originates from a flaw (see U.6.2).

U.2.8
investigation
Activities required to determine the interpretation of an indication (see U.6.1 and U.6.2).

U.2.9
recording
The writing of ultrasonic data onto an appropriate electronic medium.

U.2.10
reflector
An interface at which an ultrasonic beam encounters a change in acoustic impedance and at which at least part of the energy is reflected.

U.3 Technique

- **U.3.1** The UT volume shall include the weld metal, plus the lesser of 25 mm (1 in.) or t of adjoining base metal on each side of the weld unless otherwise agreed upon by the Purchaser and the Manufacturer.

U.3.2 UT for the detection of flaws shall be performed using automated, computer-based data acquisition except that scanning of adjacent base metal for flaws that can interfere with the examination may be performed manually. UT for sizing of flaws shall be performed as described in U.6.3.1

- **U.3.3** A documented examination strategy or scan plan shall be provided showing transducer placement, movement, and component coverage that provides a standardized and repeatable methodology for weld acceptance. The scan plan shall also include ultrasonic beam angle to be used, beam directions with respect to weld centerline, and tank material volume examined for each weld. The documentation shall be made available to the Owner upon request.

U.3.4 Data from the examination volume, per U.3.1, shall be recorded and/or documented as follows:

a) For automated computer-based scans, data shall be recorded using the same system essential variables, specified value or range of values, used for the demonstration of the procedure per U.4.3.

b) For manual scans, results shall be documented in a written report.

- **U.3.5** The UT shall be performed in accordance with a written procedure which has been reviewed and approved by the Purchaser and conforms to the requirements of Section V, Article 4, except that:

a) the calibration block shown in Figure T-434.2.1 of Section V, Article 4 shall be used, and

b) for examination techniques that provide plate quality information (e.g. TOFD), the initial base material straight-beam examination need not be performed.

U.3.6 The examination methodology (including U.6.6) shall be demonstrated to be effective over the full weld volume. It is recognized that Time of Flight Diffraction (TOFD) may have limitations in detection of flaws at the surface

such that it may be necessary to supplement TOFD with pulse-echo techniques suitable for the detection of near-field and far-field flaws. The variety of surface and sub-surface category flaws in the test plate mandated by U.4.3a are intended to ensure that any such limitations are adequately addressed.

U.4 Personnel Qualifications and Training

U.4.1 Personnel Qualifications—Personnel performing and evaluating UT examinations shall be qualified and certified in accordance with their employer's written practice. ASNT SNT-TC-IA or CP-189 shall be used as a guideline. Only Level-II or Level-III personnel shall perform UT examinations, analyze the data, or interpret the results.

U.4.2 Qualification Records—Qualification records of certified personnel shall be approved by the Manufacturer and maintained by their employer.

• **U.4.3 Personnel Testing**—Personnel who acquire and analyze UT data shall be trained using the equipment of U.3.2, and the procedure of U.3.5 above. Additionally, they shall pass a practical examination based on the technique on a blind test plate. The testing program details shall be by agreement between the Purchaser and the inspection company but shall in any case include the following elements as a minimum.

a) The test plate shall contain a variety of surface and sub-surface category flaws including multiple flaws described in U.6.5. Some of the flaws shall be acceptable and others unacceptable per the applicable criteria of Table U.1a or Table U.1b.

b) The practical examination should cover detection, interpretation, sizing, plotting, categorization, grouping, and characterization that is sufficient to cover the cases outlined in U.6.

c) Criteria for passing the test shall include limits on the number of miscalls, both of rejectable flaws missed or accepted and acceptable regions rejected.

d) Testing shall be facilitated by a third-party or by the Purchaser.

U.5 Level III Review

U.5.1 The final data package shall be reviewed by a UT Level-III individual qualified in accordance with U.4.1 and U.4.3 above. The review shall include the following.

a) The ultrasonic data record.

b) Data interpretations.

c) Evaluations of indications performed by another qualified Level-II or Level-III individual. The data review may be performed by another individual from the same organization.

U.5.2 Alternatively, the review may be achieved by arranging for a data acquisition and initial interpretation by a Level-II individual qualified in accordance with. U.4.1 and U.4.3 above, and a final interpretation and evaluation shall be performed by a Level-III individual qualified per U.5.1.

U.6 Interpretation and Evaluation

U.6.1 Investigation Criteria—Reflectors that produce a response greater than 20 % of the reference level shall be investigated. Alternatively, for methods or techniques that do not use amplitude recording levels, sized reflectors longer than 40 % of the acceptable surface or subsurface flaws in Table U.1a and Table U.1b shall be investigated. The investigation shall interpret whether the indication originates from a flaw or is a geometric indication in

accordance with U.6.2 below. When the reflector is determined to be a flaw, the flaw shall be evaluated and acceptance criteria of Table U.1a and Table U.1b as applicable shall apply.

U.6.2 Interpretation as Geometric/Metallurgical—Ultrasonic indications of geometric and metallurgical origin shall be interpreted as follows:

U.6.2.1 Indications that are determined to originate from the surface configurations (such as weld reinforcement or root geometry) or variations in metallurgical structure of materials may be interpreted as geometric indications, and

a) need not be sized or categorized in accordance with U.6.3 and U.6.4 below;

b) need not be compared to the allowable flaw acceptance criteria of Table U.1a and Table U.2b; and

c) the maximum indication amplitude (if applicable) and location shall be documented, for example: internal attachments, 200 % DAC maximum amplitude, 1 in. above the weld centerline, on the inside surface, from 90° to 95°.

U.6.2.2 The following steps shall be taken to classify an indication as geometric.

a) Interpret the area containing the indication in accordance with the applicable examination procedure.

b) Plot and verify the indication's coordinates, provide a cross-sectional display showing the indication's position and any surface conditions such as root or counter-bore.

c) Review fabrication or weld prep drawings.

U.6.2.3 Alternatively, other NDE methods or techniques may be applied to interpret an indication as geometric (e.g., alternative UT beam angles, radiography, ID and/or OD profiling).

U.6.3 Flaw Sizing

U.6.3.1 Flaws shall be sized using automated, computer-based data acquisition or by a supplemental manual technique that has been demonstrated to perform acceptably per U.4.3.

U.6.3.2 The dimensions of the flaw shall be defined by the rectangle that fully contains the area of the flaw. The length (l) of the flaw shall be drawn parallel to the inside pressure-retaining surface of the component. The height (h) of the flaw shall be drawn normal to the inside pressure-retaining surface.

U.6.4 Flaw Categorization

If the space between the surface and the flaw in the through-thickness direction is less than one-half the measured height of the flaw, then the flaw shall be categorized as a surface flaw with flaw height extending to the surface of the material.

U.6.5 Grouping of Multiple Flaws

U.6.5.1 Discontinuous flaws that are oriented primarily in parallel planes shall be considered to lie in a single plane if the distance between the adjacent planes is equal to or less than 13 mm ($^1/_2$ in.).

U.6.5.2 If the space between two flaws aligned along the axis of weld is less than the length of the longer of the two, the two flaws shall be considered a single flaw.

U.6.5.3 If the space between two flaws aligned in the through-thickness direction is less than the height of the flaw of greater height, the two flaws shall be considered a single flaw.

U.6.6 Flaw Acceptance Criteria

U.6.6.1 Acceptance Criteria Tables—Flaw dimensions resulting after the application of the rules of U.6.3, U.6.4, and U.6.5 shall be evaluated for acceptance using the criteria of Table U.1a and Table U.1b.

U.6.6.2 Surface Examination—Flaws categorized as surface flaws during the UT examination may or may not be surface-connected. Therefore, unless the UT data analysis confirms that the flaw is not surface-connected, a supplemental surface examination (MT or PT) shall be performed in accordance with 8.2 or 8.4 as applicable for all surface flaws. Any flaws which are detected by MT or PT and characterized as planar are unacceptable regardless of length.

U.7 Repairs

All repaired areas, plus the lesser of 25 mm (1 in.) or t of the adjoining weld on each side of the repair, shall be reinspected per this Annex.

U.8 Flaw Documentation

In addition to the data record prescribed by U.3.4, written documentation shall be produced for each unacceptable flaw and those acceptable flaws that either exceed 50 % of reference level for amplitude based techniques or exceed 75 % of the acceptable length for non-amplitude techniques.

Table U.1a—Flaw Acceptance Criteria for UT Indications May be Used for All Materials (SI)

All dimensions in mm

Thickness at Weld (t)[a]	ACCEPTABLE FLAW LENGTHS—(l)							
	For Surface Flaw[b] With Height, (h)			For SubSurface Flaw With Height, (h)				
	2	2.5	3	2	3	4	5	6
10 to <13	8	8	4	14	5	4	Not allowed	Not allowed
13 to < 19	8	8	4	38	8	5	4	3
19 to < 25	8	8	4	75	13	8	6	5
25 to < 32	9	8	4	100	20	9	8	6
32 to < 40	9	8	4	125	30	10	8	8
40 to < 44	9	8	4	150	38	10	9	8

[a] t = thickness of the weld excluding any allowable reinforcement. For a butt weld joining members having different thickness at the weld, t is the thinner of the two.

[b] Any surface flaw, to be deemed acceptable, must satisfy both the size limitations of this table and additionally satisfy the MT/PT characterization limitations of U.6.6.2

Table U.1b—Flaw Acceptance Criteria for UT Indications May be Used for All Materials (USC)

All dimensions in inches

Thickness at Weld (t)[a]	ACCEPTABLE FLAW LENGTHS—(l)							
	For Surface Flaw[b] With Height, (h)			For SubSurface Flaw With Height, (h)				
	0.08	**0.10**	**0.12**	**0.08**	**0.12**	**0.16**	**0.2**	**0.24**
0.375 to < 0.50	0.30	0.30	0.15	0.55	0.20	0.15	Not allowed	Not allowed
0.50 to < 0.75	0.30	0.30	0.15	1.50	0.30	0.20	0.15	0.10
0.75 to < 1.0	0.30	0.30	0.15	3.00	0.50	0.30	0.25	0.20
1.0 to < 1.25	0.35	0.30	0.15	4.00	0.80	0.35	0.30	0.25
1.25 to < 1.50	0.35	0.30	0.15	5.00	1.20	0.40	0.30	0.30
1.50 to < 1.75	0.35	0.30	0.15	6.00	1.50	0.40	0.35	0.30

[a] t = thickness of the weld excluding any allowable reinforcement. For a butt weld joining members having different thickness at the weld, t is the thinner of the two.

[b] Any surface flaw, to be deemed acceptable, must satisfy both the size limitations of this table and additionally satisfy the MT/PT characterization limitations of U.6.6.2.

Annex V
(normative)

Design of Storage Tanks for External Pressure

• V.1 Scope

This Annex provides minimum requirements that may be specified by the Purchaser for tanks that are designed to operate with external pressure (vacuum) loading as a normal operating condition. This Annex is intended to apply to tanks for which the normal operating external pressure exceeds 0.25 kPa (0.036 lbf/in.^{2}) but does not exceed 6.9 kPa (1.0 lbf/in.^{2}). This Annex is intended for use with tanks subject to uniform external pressure. The requirements in this Annex represent accepted practice for application to flat-bottom tanks. However, the Purchaser may specify other procedures or additional requirements. Any deviation from the requirements of this Annex must be by agreement between the Purchaser and the Manufacturer. See V.11 for a discussion of the technical basis for this Annex.

V.2 General

The design procedures presented in this Annex are intended to allow the user to evaluate the design of the bottom, shell and fixed roof of tanks that operate under partial vacuum conditions. See 5.2.2 for requirements for combining external pressure loads with other design loads. The requirements of this Annex are not intended to supersede the requirements of other Annexes of this standard that may be specified. For Annex AL, M, S, and SC tanks, the variables in the equations prescribed in this Annex shall be modified in accordance with the requirements of Annex AL, Annex M, Annex S, and Annex SC, respectively.

V.3 Nomenclature and Definitions

V.3.1 Nomenclature

θ is the angle between a horizontal plane and the surface of the roof plate, in degrees;

A_{reqd} is the total required cross-sectional area of the stiffener region, in mm^2 (in.^{2});

A_{stiff} is the required cross-sectional area of stiffener, mm^2 (in.^{2}) Note: A_{stiff} must be at least $^1/_2 \times A_{\text{total}}$;

D is the nominal tank diameter, in m (ft);

D_L is the dead load, the weight of the tank or tank component calculated using nominal thickness unless otherwise specified, in kPa (lb/ft^2);

E is the modulus of elasticity of the roof plate material, in MPa, (lb/in.^{2});

f is the smallest of the allowable tensile stresses (see Table 5.2a and Table 5.2b) of the roof plate material, shell plate material or stiffener ring material at the maximum operating temperature, in MPa (lb/in.^{2});

f_c is the smallest of the allowable compressive stresses of the roof plate material, shell plate material, bottom plate material or stiffener ring material at the maximum operating temperature, in MPa (lb/in.^{2}). f_c = $0.4F_y$ of components considered for the intermediate and bottom stiffener regions. However, f_c need not be less than 103 MPa (15,000 lb/in.^{2}). f_c = $0.6F_y$ of components considered for the top end stiffener region. However, f_c need not be less than 140 MPa (20,000 lb/in.^{2}).

F_y is the yield strength of the component at the maximum operating temperature, in MPa (lb/in.^{2});

G_{in} is the unit weight of liquid inside tank, in kg/m^3 (lb/ ft^3);

G_{out} is the unit weight of flood liquid, in kg/m^3 (lb/ ft^3) (1000 kg/m^3 [62.4 lb/ ft^3] for water);

H is the shell height, in m (ft);

$h_1, h_2 \ldots h_n$ is the height of shell courses 1, 2, 3, through n, respectively, in m (ft);

H_{in} is the height or depth of liquid inside tank, in m (ft);

H_{safe} is the maximum height of unstiffened shell permitted, based on t_{smin}, in m (ft);

HTS is the Transformed height of tank shell, in m (ft);

I_{act} is the The actual moment of inertia of the stiffener ring region, in cm^4 (in.^{4});

I_{reqd} is the required moment of inertia of the stiffener ring, in cm^4 (in.^{4});

L_1, L_2 is the distances between adjacent intermediate stiffeners or intermediate stiffener and top of shell or bottom of shell, respectively, in m (ft);

L_r is the minimum roof live load on horizontal projected area of the roof, kPa (lb/ft^2) = 1.0kPa (20 lb/ft^2);

L_s equals (L_1 + L_2)/2, in m (ft);

N is the number of waves into which a shell will buckle under external pressure;

N_s is the number of intermediate stiffeners;

P_e is the specified external pressure, in kPa (lb/ft^2);

P_r is the total design external pressure for design of roof, in kPa (lb/ft^2);

P_s is the total design external pressure for design of shell, in kPa (lb/ft^2). P_s = the greater of 1) the specified design external pressure, P_e, excluding wind or 2) W + 0.4P_e (see 5.2.2 for an important consideration);

ψ is the stability factor (see V.8.1 for values);

Q is the radial load imposed on the intermediate stiffener by the shell, in N/m (lb/in.);

q_s is the first moment of area of stiffener for design of stiffener attachment weld, in cm^3 (in.^{3});

R is the roof dish radius, in m (ft);

S is the specified snow load, in kPa (lb/ft^2);

S_d is the allowable design stress, in MPa, (lb/in.^{2});

t is the nominal shell thickness, mm (in.);

t_b is the nominal thickness of bottom plate under the shell, in mm (in.);

t_{cone} is the required nominal thickness of cone roof plate, in mm (in.). Maximum corroded thickness shall be 12.5 mm (0.5 in.);

t_{dome} is the required nominal thickness of dome roof plate, in mm (in.). Maximum corroded thickness shall be 12.5 mm (0.5 in.);

$t_{s1}, t_{s2} \ldots t_{sn}$ is the nominal thickness of cylindrical shell course 1, 2…n, in mm (in.), where the subscript numbering is from top to bottom of the shell;

NOTE The subscript 1 denotes the top shell course and *n* denotes the lowest shell course;

t_{shell} is the nominal thickness of shell at level under consideration, in mm (in.);

t_{smin} is the nominal thickness of thinnest shell course, in mm (in.);

V_1 is the radial load imposed on the stiffener by the shell, in N/m (lb/in.);

V_{s1} is the radial pressure load imposed on the stiffener from the shell for sizing the stiffener attachment weld, in N/m (lb/ft);

v_s is the radial shear load on stiffener for sizing the stiffener attachment weld, in N (lb);

V_{s2} is the weld shear flow load imposed for sizing the stiffener attachment weld, in N/m (lb/ft);

W is the maximum wind pressure consistent with the specified design wind velocity, in kPa (lb/ft^2). The maximum wind pressure shall be calculated as follows (see 5.9.7.1, Note 2):

In SI units:

$$W = 1.48\left(\frac{V}{190}\right)^2$$

In USC units:

$$W = 31\left(\frac{V}{120}\right)^2$$

where

V is the specified design wind velocity (3-sec gust), in kph (mph);

W_{bott} is the weight of bottom plate, in kg/m^2 (lb/ft^2);

w_{shell} is the contributing width of shell on each side of intermediate stiffener, in mm (in.);

X_{btm} is the length of bottom plate within tension/compression ring region, in mm (in.). X_{btm} = 16 t_b;

X_{cone} is the length of cone roof within tension/compression ring region, in mm (in.);

X_{dome} is the length of umbrella or dome roof within tension/compression ring region, in mm (in.);

X_{shell} is the length of shell within tension/compression ring region, in mm (in.).

V.3.2 Definitions

V.3.2.1

specified external pressure
External pressure specified on the tank data sheet (see Annex L) by the Purchaser. This specified value excludes any external pressure due to wind.

V.3.2.2

total design external pressure for the roof (P_r)
Sum of the specified external pressure and the roof live load or snow load and the dead load as provided in V.7.1.

V.3.2.3

total design external pressure for the shell (P_s)
Sum of the specified external pressure and the external pressure due to wind as combined in V.8.1.2.

V.4 Construction Tolerances

The procedures prescribed in this Annex are only valid for tanks that satisfy the construction tolerances of 7.5.

V.5 Corrosion Allowance

Unless specified otherwise by the Purchaser, the evaluation of tanks in accordance with the requirements of this Annex may be based on the nominal thickness of the pressure-resisting components. If the nature of the tank service conditions is such that corrosion will result in a uniform loss of thickness of the affected components, the Purchaser should specify that corrosion allowance be deducted from the nominal thickness used in the evaluation.

V.6 Testing

Testing of the tank design for external pressure is not required by this Annex, but may be performed if specified by the Purchaser.

V.7 Fixed Roof

The total design external pressure loading, P_r, on the roof is determined by the following equation:

$$P_r = \text{the greater of } D_L + (L_r \text{ or } S) + 0.4\,P_e \text{ or } D_L + P_e + 0.4\,(L_r \text{ or } S)$$

V.7.1 Column-Supported Cone Roof

Column-supported cone roofs may be used on tanks designed for external pressure, providing the design and construction satisfy the following requirements.

V.7.1.1 The roof plate spanning between support rafters may be designed as a simple beam spanning several supports, or as a catenary beam spanning between supports, or as a diaphragm, by agreement between the Purchaser and the Manufacturer. Regardless of the design method selected, the following considerations shall be addressed in the design:

a) allowable stress for both membrane and bending;

b) joint efficiency of welds joining the roof plates together;

c) assumed end fixity conditions for plate (beam) span;

d) allowable deflection criteria.

If the roof plate is designed as a catenary beam, the following additional considerations shall be addressed in the design.

e) Possibility of stress reversal and fatigue loading of welds at and between supports of the roof plate.

V.7.1.2 Additional guidance on the design of supported cone roof plates for pressure loading may be found in Reference 8 and Reference 9, for example, and in other published texts.

V.7.2 Self-Supporting Cone Roof

V.7.2.1 The required thickness of the roof plate is determined by the following equation. However, the thickness shall not be less than that required by 5.10.5.1.

In SI units:

$$t_{\text{cone}} = \frac{83D}{\sin\theta}\sqrt{\frac{P_r}{1.72E}}$$

In USC units:

$$t_{\text{cone}} = \frac{D}{\sin\theta}\sqrt{\frac{P_r}{0.248E}}$$

V.7.2.2 The total required cross-sectional area in the cone roof-to-shell joint region for external pressure on the roof is determined by the following equation.

In SI units:

$$A_{\text{reqd}} = \frac{125P_rD^2}{\text{f}\tan\theta}$$

In USC units:

$$A_{\text{reqd}} = \frac{P_rD^2}{8\ \text{f}\tan\theta}$$

V.7.2.3 The length of cone roof considered to be within the top tension/compression ring region is determined by the following equation (see Figure V.1a):

In SI units:

$$X_{\text{cone}} = 13.4\sqrt{\frac{Dt_{\text{cone}}}{\sin\theta}}$$

In USC units:

$$X_{\text{cone}} = 1.47\sqrt{\frac{Dt_{\text{cone}}}{\sin\theta}}$$

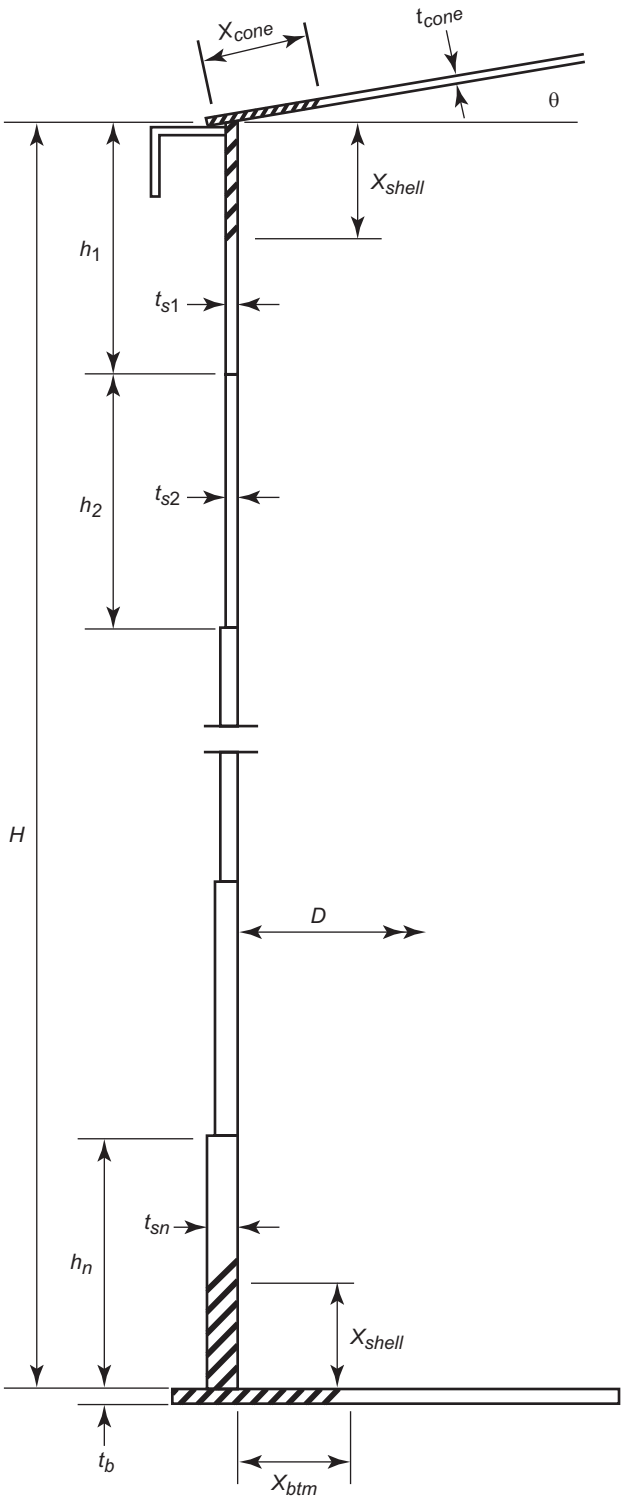

NOTE See Appendix F, Figure F-2 for alternative configurations and associated limitations on structural section used for top stiffener.

Figure V.1a—Dimensions for Self-Supporting Cone Roof

V.7.2.4 The vertical dimension measured from the top of the shell or top angle considered to be within the tension/compression ring region is determined by the following equation (see Figure V.1a):

In SI units:

For the top tension/compression region: For the bottom tension/compression region:

$$X_{\text{shell}} = 13.4\sqrt{Dt_{sl}} \qquad X_{\text{shell}} = 13.4\sqrt{Dt_{sn}}$$

In USC units:

For the top tension/compression region: For the bottom tension/compression region:

$$X_{\text{shell}} = 1.47\sqrt{Dt_{sl}} \qquad X_{\text{shell}} = 1.47\sqrt{Dt_{sn}}$$

V.7.2.5 The required cross-sectional area of the top stiffener structural shape is determined by the following equation:

$$A_{\text{stiff}} = A_{\text{reqd}} - t_{s1}\, X_{\text{shell}} - t_{\text{cone}} X_{\text{cone}}$$

V.7.3 Self-Supporting Dome or Umbrella Roof

V.7.3.1 The required thickness of the roof plate is determined by the following equations. However, the thickness shall not be less than that required by 5.10.6.1. (Note that design in accordance with API 620 is permitted for dished dome roofs meeting the requirements of API 620, 5.10.5.1.)

In SI units:

$$t_{\text{dome}} = 141R\sqrt{\frac{P_r}{E}} \text{ (for umbrella and dome roofs)}$$

In USC units:

$$t_{\text{dome}} = 4.47R\sqrt{\frac{P_r}{E}} \text{ (for umbrella and dome roofs)}$$

V.7.3.2 The total required cross-sectional area in the dome or umbrella roof-to-shell joint region for external pressure on the roof is determined by the following equation. However, the area shall not be less than that required by 5.10.6.2.

In SI units:

$$A_{\text{reqd}} = \frac{300P_rRD}{f}$$

In USC units:

$$A_{\text{reqd}} = \frac{P_rRD}{3.375f}$$

V.7.3.3 The length of dome or umbrella roof considered to be within the top tension/compression ring region is determined by the following equation:

In SI units:

$$X_{\text{dome}} = 19.0\sqrt{RT_{\text{dome}}}$$

In USC units:

$$X_{\text{dome}} = 2.1\sqrt{RT_{\text{dome}}}$$

V.7.3.4 The length of shell considered to be within the top tension/compression ring region is determined by the following equation (see Figure V.1b):

In SI units:

$$X_{\text{shell}} = 13.4\sqrt{Dt_{s1}}$$

In USC units:

$$X_{\text{shell}} = 1.47\sqrt{Dt_{s1}}$$

V.7.3.5 The required cross-sectional area of the top stiffener structural shape is determined by the following equation:

$$A_{\text{stiff}} = A_{\text{reqd}} - t_{s1}X_{\text{shell}} - t_{\text{dome}}X_{\text{dome}}$$

$$A_{\text{stiff}} = 7.21 - (0.3125)(7.21) - (0.529)(11.7)$$

$$A_{\text{stiff}} = -1.23 \text{ in.}^2$$

NOTE This value should be recalculated, if necessary, after selection of final shell thickness.

V.8 Shell

• V.8.1 Unstiffened Shells

The procedure utilizes the nominal thickness of thinnest shell course and the transformed shell method to establish intermediate stiffener number and locations. The equations in V.8.1.2 and V.8.1.3 contain variables for a stability factor, ψ, that is dependent upon the magnitude of the vacuum pressure. The equations also include a 0.8 "knockdown" factor for imperfections in the cylindrical shell geometry. Shells shall be checked for two conditions: 1) the combined wind plus vacuum, and 2) for vacuum pressure alone. Each condition shall be checked using the appropriate stability factor, ψ, as follows.

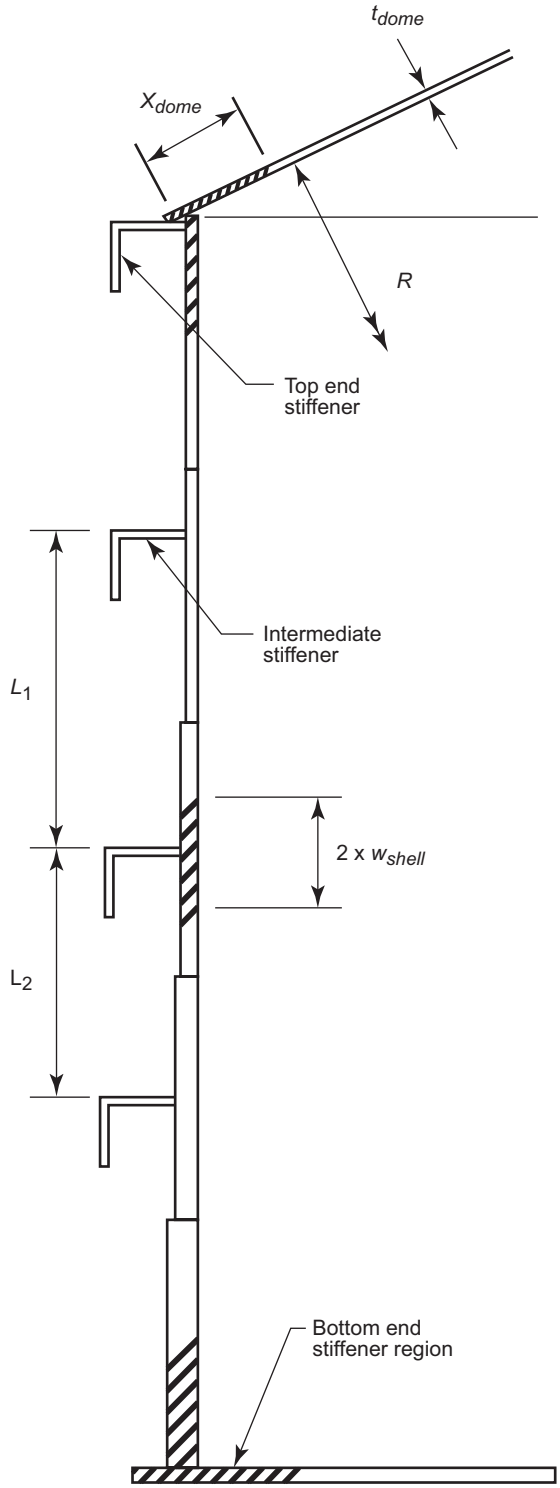

NOTE See Appendix F, Figure F-2 for alternative configurations and associated limitations on structural section used for top stiffener.

Figure V.1b—Dimensions for Self-Supporting Dome Roof

In SI Units:

Condition 1—Wind plus specified external (vacuum) pressure

ψ = 1.0 for wind plus vacuum pressure [when vacuum pressure (Pe) is less than or equal to 0.25 kPa]. For this case, Annex V is not mandatory.

ψ = [Pe + 0.70]/0.95 for wind plus vacuum pressure [when vacuum pressure (Pe) is greater than 0.25 kPa but less than or equal to 0.70 kPa].

ψ = [Pe/0.48] for wind plus vacuum pressure [when vacuum pressure (Pe) is greater than 0.70 kPa; however, ψ need not exceed 2.5.

Condition 2—Specified external (vacuum) pressure only

ψ = 3.0

In USC Units:

Condition 1—Wind plus specified external (vacuum) pressure

ψ = 1.0 for wind plus vacuum pressure [when vacuum pressure (Pe) is less than or equal to 5.2 psf]. For this case, Annex V is not mandatory.

ψ = [Pe + 15]/20 for wind plus vacuum pressure [when vacuum pressure (Pe) is greater than 5.2 psf but less than or equal to 15 psf].

ψ = [Pe/10] for wind plus vacuum pressure [when vacuum pressure (Pe) is greater than 15 psf; however, ψ need not exceed 2.5.

Condition 2—Specified external (vacuum) pressure only

ψ = 3.0

V.8.1.1 For an unstiffened tank shell subjected to external pressure sufficient to cause buckling, buckling will occur elastically if the following criterion (see note below) is satisfied. Note that this criterion will typically be satisfied except for very small, exceptionally thick tanks. If this criterion is not satisfied, external pressure effects should be evaluated in accordance with the requirements of the ASME *Boiler and Pressure Vessel Code*, Section VIII, Division 1.

NOTE 1 Source is The Structural Research Council (SSRC) text, "Guide to Stability Design Criteria for Metal Structures," Section 14.3.5.

In SI units:

$$\left(\frac{D}{t_{s\min}}\right)^{0.75}\left[\left(\frac{H_{TS}}{D}\right)\left(\frac{F_y}{E}\right)^{0.5}\right] \geq 0.00675$$

In USC units:

$$\left(\frac{D}{t_{s\min}}\right)^{0.75}\left[\left(\frac{H_{TS}}{D}\right)\left(\frac{F_y}{E}\right)^{0.5}\right] \geq 0.19$$

The equations in the following sections are applicable, providing the shell satisfies the criterion of this section.

V.8.1.2 The design external pressure (using the appropriate ψ from V.8.1.1) and the specified external (vacuum) pressure (using $\psi = 3.0$) shall not exceed for an unstiffened tank:

In SI units:

$$P_s \text{ or } P_e \leq \frac{E}{15{,}203\psi\left(\frac{H_{TS}}{D}\right)\left(\frac{D}{t_{s\min}}\right)^{2.5}}$$

In USC units:

$$P_s \text{ or } P_e \leq \frac{0.6E}{\psi\left(\frac{H_{TS}}{D}\right)\left(\frac{D}{t_{s\min}}\right)^{2.5}}$$

V.8.1.3 The equation in V.8.1.2 can be rewritten to calculate the nominal thickness of the thinnest shell course required for a specified design external pressure as:

In SI units:

$$t_{s\min} \geq \frac{47.07(\psi H_{TS} P_s)^{0.4}\ D^{0.6}}{(E)^{0.4}}$$

In USC units:

$$t_{s\min} \geq \frac{1.23(\psi H_{TS} P_s)^{0.4}\ D^{0.6}}{(E)^{0.4}}$$

V.8.1.4 For tanks with shell courses of varying thickness, the transformed shell height, H_{TS}, for the tank shell is determined in accordance with the following procedure:

a) The transformed height of the shell is calculated as the sum of the transformed widths of the individual shell courses as described in Item b.

b) The transformed width of each individual shell course is calculated by multiplying the actual shell height by the ratio $(t_{s1}/t_{\text{act}})^{2.5}$. Note that $t_{s1} = t_{\text{act}}$ for the top shell course.

The transformed shell height is determined from the following equation:

$$H_{TS} = h_1\left(\frac{t_{s1}}{t_{s1}}\right)^{2.5} + h_2\left(\frac{t_{s1}}{t_{s2}}\right)^{2.5} + \ldots h_n\left(\frac{t_{s1}}{t_{sn}}\right)^{2.5}$$

The transformed shell height is an analytical model of the actual tank. The transformed shell has a uniform thickness equal to the topmost shell thickness and a height equal to the transformed height. This analytical model of the actual tank will have essentially an equivalent resistance to buckling from external pressure as the actual tank.

V.8.2 Circumferentially Stiffened Shells

Tank shells may be strengthened with circumferential stiffeners to increase the resistance to buckling under external pressure loading. When circumferential stiffeners are used to strengthen the cylindrical shell to resist buckling due to external pressure, the design of the stiffeners shall meet the following requirements.

V.8.2.1 Number and Spacing of Intermediate Stiffener Rings

V.8.2.1.1 Calculate the transformed shell height in accordance with V.8.1.4. (See V.10 for a numerical example of the calculation of the transformed shell height.)

V.8.2.1.2 Calculate the maximum spacing of intermediate stiffeners. The equation in V.8.1.3 can be rearranged to solve for a "safe height" of shell, H_{safe}, as follows. H_{safe} is the maximum height of unstiffened shell permitted, based on the transformed shell thickness (t_{s1}).

In SI units:

$$H_{\text{safe}} = \frac{(t_{s\min})^{2.5}(E)}{15{,}203 D^{1.5}(P_s)\psi}$$

In USC units:

$$H_{\text{safe}} = \frac{0.6(t_{s\min})^{2.5}(E)}{D^{1.5}(P_s)\psi}$$

V.8.2.1.3 Calculate the number of intermediate stiffeners required, N_s, based on H_{safe}, in accordance with the following equation. A zero or negative value of N_s means that no intermediate stiffeners are required. Round up the calculated value of N_s to the nearest integer for use in subsequent calculations.

$$N_s + 1 = \frac{H_{TS}}{H_{\text{Safe}}}$$

V.8.2.1.4 Maximum stiffener spacing for each shell thickness shall be:

$$L_X = H_{\text{Safe}}\left[\frac{t_{sx}}{t_{s\min}}\right]^{2.5}$$

where

L_x is the stiffener spacing for a given shell thickness;

t_{sx} is the thickness of the shell in question.

V.8.2.2 Intermediate Stiffener Ring Design

V.8.2.2.1 The number of waves, N, into which a shell will theoretically buckle under uniform external pressure is determined in accordance with the following equation:

In SI units:

$$N^2 = \sqrt{\frac{445D^3}{t_{s\min} H_{TS}^2}} \leq 100$$

In USC units:

$$N^2 = \sqrt{\frac{5.33D^3}{t_{s\min} H_{TS}^2}} \leq 100$$

For design purposes, the minimum value of N is 2 and the maximum value of N is 10. Use the same N^2 for intermediate and end stiffeners.

V.8.2.2.2 The distance between adjacent intermediate stiffeners on the actual shell for shells of non-uniform thickness is determined in accordance with the following procedures.

a) Maximum spacing, L_s, on minimum shell thickness, $t_{s\min}$, = H_{Safe}.

b) Maximum spacing, L_s on other shell thicknesses = $(H_{Safe})(t_{sx}/t_{smin})^{2.5}$, where t_{sx} is the individual shell thickness.

c) Where the spacing between stiffeners includes different shell thicknesses, adjust the actual spacing using the transformed shell spacings adjusted accordingly. See V.10 for a numerical example of this procedure.

V.8.2.2.3 The radial load imposed on the stiffener by the shell is determined in accordance with the following equation:

In SI units:

$$Q = 1000 P_s L_s$$

In USC units:

$$Q = \frac{P_s L_s}{12}$$

The stiffener should be located at $H_{TS} / (N_s + 1)$ spacing where N_s is number of intermediate stiffeners on the transformed shell.

V.8.2.2.4 The actual moment of inertia of the intermediate stiffener region, I_{act} shall be greater than or equal to the total required moment of inertia of this region, I_{reqd}, where:

I_{act} is the actual moment of inertia of the intermediate stiffener ring region, consisting of the combined moment of inertia of the intermediate stiffener and the shell within a contributing distance on each side of the intermediate stiffener. The contributing distance is determined in accordance with the following equation:

In SI units:

$w_{shell} = 13.4\sqrt{Dt_{shell}}$ on each side of stiffener

In USC units:

$w_{shell} = 1.47\sqrt{Dt_{shell}}$ on each side of stiffener

where

t_{shell} is the actual thickness of the shell plate on which the stiffener is located.

V.8.2.2.5 The required moment of inertia of the intermediate stiffener region, I_{reqd} is determined in accordance with the following equation:

In SI units

$$I_{\text{reqd}} = \frac{37.5QD^3}{E(N^2-1)}$$

In USC units:

$$I_{\text{reqd}} = \frac{648QD^3}{E(N^2-1)}$$

V.8.2.2.6 In addition to the moment of inertia requirements stated above, the intermediate stiffener region shall satisfy the following area requirements.

V.8.2.2.6.1 The total required cross-sectional area of the intermediate stiffener region, A_{reqd}, is determined in accordance with the following equation:

In SI units:

$$A_{\text{reqd}} = \frac{QD}{2f_c}$$

In USC units:

$$A_{\text{reqd}} = \frac{6QD}{f_c}$$

V.8.2.2.6.2 The required cross-sectional area of the intermediate stiffener structural shape alone, A_{stiff}, is determined in accordance with the following equation:

In SI units:

$$A_{\text{stiff}} = A_{\text{reqd}} - 26.84t_{\text{shell}}\sqrt{Dt_{\text{shell}}}$$

In USC units:

$$A_{\text{stiff}} = A_{\text{reqd}} - 2.94t_{\text{shell}}\sqrt{Dt_{\text{shell}}}$$

A_{stiff} (actual) must be greater than or equal to A_{stiff} required.

A_{stiff} (actual) must also be greater than or equal to 0.5 A_{reqd}.

V.8.2.3 End Stiffeners

The actual moment of inertia of the end stiffener region, I_{act} must be greater than or equal to the total required moment of inertia of this region, I_{reqd}, where:

I_{act} is the actual moment of inertia of the end stiffener ring region, consisting of the combined moment of inertia of the end stiffener and the shell within a contributing distance on one side of the end stiffener. No credit shall be taken for the roof portion in this region, however credit may be taken for a portion of the bottom plate. The width of bottom plate considered effective as an end stiffener shall be not more than $16t_b$, where t_b is the thickness of the bottom or annular plates, unless a detailed stress analysis demonstrates that a greater width may be used. The contributing distance on one side of the stiffener is determined in accordance with the following equation:

In SI units:

For the top end stiffener:

$$w_{\text{shell}} = 13.4\sqrt{Dt_{sl}}$$

For the bottom end stiffener:

$$w_{\text{shell}} = 13.4\sqrt{Dt_{sn}}$$

In USC units:

For the top end stiffener:

$$w_{\text{shell}} = 1.47\sqrt{Dt_{sl}}$$

For the bottom end stiffener:

$$w_{\text{shell}} = 1.47\sqrt{Dt_{sn}}$$

V.8.2.3.1 The radial load imposed on the end stiffener by the shell is determined in accordance with the following equation:

In SI units:

$$V_1 = 250P_sH$$

In USC units:

$$V_1 = \frac{P_sH}{48}$$

V.8.2.3.2 The required moment of inertia of the end stiffener region, I_{reqd} is determined in accordance with the following equation:

In SI units

$$I_{\text{reqd}} = \frac{37.5V_1D^3}{E(N^2-1)}$$

In USC units:

$$I_{\text{reqd}} = \frac{684V_1D^3}{E(N^2-1)}$$

V.8.2.3.3 In addition to the moment of inertia requirements stated above, the end stiffener region shall satisfy the following area requirements.

V.8.2.3.3.1 The total required cross-sectional area of the end stiffener region, A_{reqd}, is determined in accordance with the following equation:

In SI units:

$$A_{\text{reqd}} = \frac{V_1 D}{2f}$$

In USC units:

$$A_{\text{reqd}} = \frac{6V_1 D}{f}$$

V.8.2.3.3.2 The required cross-sectional area of the end stiffener structural shape alone, A_{stiff}, is determined in accordance with the following equation:

For cone roof top end stiffener:

$$A_{\text{stiff}} = A_{\text{reqd}} - t_{\text{cone}} X_{\text{cone}} - t_{s1} X_{\text{shell}}$$

For dome or umbrella roof top end stiffener:

$$A_{\text{stiff}} = A_{\text{reqd}} - t_{s1} X_{\text{shell}} - t_{\text{dome}} X_{\text{dome}}$$

For bottom end stiffener:

$$A_{\text{stiff}} = A_{\text{reqd}} - t_b X_{\text{btm}} - t_{sn} X_{\text{shell}}$$

A_{stiff} (actual) must be greater than or equal to A_{stiff} (required).

V.8.2.4 Strength of Stiffener Attachment Weld

Stiffening ring attachment welds shall be sized to resist the full radial pressure load from the shell between stiffeners, and shear loads acting radially across the stiffener caused by external design loads carried by the stiffener (if any) and a computed radial shear equal to 2 % of the stiffening ring's compressive load.

V.8.2.4.1 The radial pressure load from the shell shall be determined in accordance with the following formula:

In SI units:

$$V_{s1} = 1000\, P_s L_s$$

In USC units:

$$V_{s1} = P_s L_s$$

V.8.2.4.2 The radial shear load shall be determined in accordance with the following formula:

In SI units:

$$v_s = 10\, P_s L_s D$$

In USC units:

$$v_s = 0.01\, P_s L_s D$$

V.8.2.4.3 The weld shear flow due to the radial shear load shall be determined in accordance with the following formula:

In SI units:

$$V_{s2} = 100\, v_s q_s / I_{act}$$

In USC units:

$$V_{s2} = 12\, v_s q_s / I_{act}$$

where

q_s is the first moment of area of the stiffener.

V.8.2.4.4 The combined load for the design of the weld shall be determined in accordance with the following formula:

$$W_w = (V_{s1}^2 + V_{s2}^2)^{1/2}$$

V.8.2.4.5 The minimum fillet weld leg size shall be the smallest of the shell thickness at the location of the stiffener, the stiffener thickness at the weld location, or 6 mm ($^1/_4$ in.).

V.8.2.5 Lateral Bracing of Stiffener

The projecting part of a stiffening ring without an outer vertical flange need not be braced if the width of the projecting part in a radial vertical plane does not exceed 16 times its thickness. When this condition is not satisfied, the stiffening ring shall be laterally braced in accordance with the requirements of API 620, 5.12.5.8.

V.9 Bottom

- **V.9.1** The bottom of the tank shall be evaluated for external pressure loading if either of the following conditions is applicable. These conditions do not need to be considered simultaneously unless specified by the Purchaser.

  1) If the total design external pressure force on the bottom plate exceeds the sum of the weight of the bottom plates plus the weight of any product required by the Purchaser to remain in the tank when external pressure is acting, membrane stresses in the bottom must be evaluated.

  2) If the area around the tank will be subject to flooding with liquid, provisions should be included in the design of the tank and its operating procedures to ensure that the tank contains sufficient liquid to counteract bottom uplift resulting from external flooding conditions. If the tank cannot be filled with liquid of sufficient depth to counteract the uplift from the liquid pressure under the bottom of the tank, membrane stresses in the bottom must be evaluated.

V.9.2 In both of the above cases, the bottom may be evaluated as a membrane subjected to uniform loading and restrained by the compression ring characteristics of the bottom-to-shell junction. For column-supported roofs, the design of the columns shall consider the additional axial loading due to external pressure.

V.9.3 The following provisions apply when Condition 2 in V.9.1 exists.

V.9.3.1 Calculation of external (flooding) pressure:

The calculation of the hydrostatic external pressure due to flooding is performed using the equation:

$$P = G_{\text{out}} H$$

Rule 1:

When flooding of the area surrounding a tank is possible, the most effective way to prevent damage to the shell or bottom is to maintain an equivalent or higher level of liquid inside the tank whenever flooding occurs. The required minimum level of liquid to be maintained inside the tank is calculated as follows:

$$(G_{\text{in}} \times H_{\text{in}}) + W_{\text{bott}} \;/\; (\text{p} \times R^2) \;^3\; G_{\text{out}} \times H_{\text{out}}$$

Rule 2:

When it is not possible to satisfy the equation in Rule 1, the tank and anchorage, if used, shall be designed to safely resist the unbalanced pressure resulting from flood liquid. As a minimum, the following components shall be evaluated:

V.9.3.2 allowable stress: Unless otherwise specified, the flooding described above may be considered a temporary loading and the allowable stress increased accordingly. However, the increase in allowable stress shall not exceed 33 % of the basic allowable stress for the subject component when evaluating the component for flood loading.

V.9.3.3 anchorage: For tanks that are mechanically anchored, the anchorage devices shall be adequate to resist the uplift and shear forces resulting from the pressure due to external flood liquid. If the tank is not mechanically anchored, provisions should be made to guide the tank back into its original position when the flooding conditions recede.

V.9.3.4 attached piping and sump: Piping and other components connecting the tank to the ground or another structure shall be capable of withstanding, without damage or failure, loads and movements due to any unbalanced pressures resulting from flooding of the area around the tank. If a sump is used, the design of the sump shall consider the possibility of the sump floating out of its pit during a flooding event.

V.9.3.5 bottom plate: Under the pressure of external flood liquid without counterbalancing internal liquid, the bottom plate will tend to deform or "balloon" upwards. As the bottom deforms and is subject to additional unbalanced pressure, membrane stresses increase in the bottom plate. The bottom plate shall be capable of withstanding this deformation without overstress of the plate or the attaching welds.

V.9.3.6 corner joint: As the bottom plate deforms upwards, compressive stresses and bending stresses in the shell-to-bottom joint increase. The shell plate and bottom plate components of the shell-to-bottom joint within the effective compression ring limits shall be proportioned to maintain combined stresses within the yield strength corresponding to the weaker of the two components.

V.10 Example Calculations

The following example calculations illustrate, in US Customary units, the use of this Annex.

V.10.1 Data

Tank diameter = 75 ft-0 in.

Tank shell height = 48 ft-0 in.

Design liquid level = 48 ft-0 in.

Specific gravity of liquid = 1.0

Allowable design stress, S_d = 23,200 lb/in.^{2}

Allowable stress in tension ring, f = 21,600 lb/in.^{2}

Minimum yield strength of all steel = 36,000 lb/in.^{2}

Specified corrosion allowance = None

Tank bottom plate thickness = $^3/_8$ in.

Design external pressure = 0.6 lb/in.^{2}g (86.4 lb/ft^2)

Design wind velocity (3-sec gust) = 120 mph (Maximum wind pressure, W = 31 lb/ft^2)

Design snow load = 0 lb/ft^2

Roof design live load = 25 lb/ft^2

Modulus of Elasticity, E = 30,000,000 lb/in.^{2}

Shell course heights and thicknesses calculated by the one-foot method are as follows:

Course Number	(H – 1) (ft)	Required Thickness (in.)	Minimum Thickness (in.)
1	7	0.059	$^5/_{16}$*
2	15	0.126	$^5/_{16}$*
3	23	0.193	$^5/_{16}$*
4	31	0.261	$^5/_{16}$*
5	39	0.328	0.328
6	47	0.395	0.395

* The thicknesses of the upper four shell courses were increased from those required for hydrostatic pressure to eliminate need for an intermediate wind girder.

V.10.2 External Pressure Calculations

1) Select roof type: Try a self-supporting cone roof with a 20-degree slope from horizontal.

From V.7,

$$P_r = \text{The greater of } D_L + (L_r \text{ or } S) + 0.4P_e \text{ or } D_L + P_e + 0.4\ (L_r \text{ or } S),$$

where:

D_L = 20.4 lb/ft^2 (Estimated assuming $^1/_2$–in. roof plate),

L_r = 25 lb/ft^2,

S = 0 lb/ft^2,

P_e = 0.6 lb/in.^{2} = 86.4 lb/ft^2,

P_r = 20.4 + 25 + 0.4 (86.4) = 80.0 lb/ft^2, or,

P_r = 20.4 + 86.4 + 0.4 (25) = 116.8 lb/ft^2 (Governs).

The required nominal thickness of the cone roof plate is calculated from V.7.2.1, as follows:

$$t_{\text{cone}} = \frac{D}{\sin\phi}\sqrt{\frac{P_r}{0.248E}}$$

$$t_{\text{cone}} = \frac{75}{0.342}\sqrt{\frac{116.8}{7{,}440{,}000}}$$

$t_{\text{cone}} = 0.869$ in., this thickness is not practical. Consider a supported cone roof or a self-supporting dome roof.

Try a lap-welded dome roof with a dish radius of 1.0 × D = 1.0 × 75 = 75 ft. Assuming the plate weight does not change significantly, the required thickness of the dome plate is calculated from V.7.3.1 as follows:

$$t_{\text{dome}} = 4.47R\sqrt{\frac{P_r}{E}}$$

$$t_{\text{dome}} = 4.47(75)\sqrt{\frac{116.8}{30{,}000{,}000}}$$

$t_{\text{dome}} = 0.661$ in., this thickness is not practical for lap-welding.

Consider a butt-welded dome roof with a dish radius of 0.8 × D = 0.8 × 75 = 60 ft-0 in. Again assuming the plate weight does not change significantly, the required thickness of the dome plate is calculated from V.7.3.1 as follows:

$$t_{\text{dome}} = 4.47R\sqrt{\frac{P_r}{E}}$$

$$t_{\text{dome}} = 4.47(60)\sqrt{\frac{116.8}{30{,}000{,}000}}$$

$t_{\text{dome}} = 0.529$ in., this thickness is practical for butt-welding. (Alternatively, a supported cone roof could be used.)

2) Calculate the roof tension ring area required at the junction of the roof and cylindrical shell:

From V.7.3.2, the required tension ring area is calculated as follows:

$$A_{\text{reqd}} = \frac{P_r RD}{3.375f}$$

$$A_{\text{reqd}} = \frac{116.8(60)(75)}{3.375(21{,}600)}$$

$A_{\text{reqd}} = 7.21$ sq. in.

From V.7.3.3, the length of effective roof plate contributing to the tension ring area is calculated as follows:

$$X_{\text{dome}} = 2.1\sqrt{RT_{\text{dome}}}$$

$$X_{\text{dome}} = 2.1\sqrt{60(0.529)}$$

$X_{\text{dome}} = 11.7$ in.

From V.7.3.4, the length of effective shell plate contributing to the tension ring area is calculated as follows:

$$X_{\text{shell}} = 1.47\sqrt{Dt_{s1}}$$

$$X_{\text{shell}} = 1.47\sqrt{75(0.3125)}$$

$X_{\text{shell}} = 7.21$ in. (Note: This value should be recalculated, if necessary, after selection of final shell thickness.)

From V.7.3.5, the required area of the stiffener is calculated as follows:

$$A_{\text{stiff}} = A_{\text{reqd}} - t_{s1}X_{\text{shell}} - t_{\text{dome}}X_{\text{dome}}$$

$$A_{\text{stiff}} = 7.21 - (0.3125)(7.21) - (0.529)(11.7)$$

$A_{\text{stiff}} = -1.23$ sq. in., Stiffener is not required

Note: This value should be recalculated, if necessary, after selection of final shell thickness.)

3) Check that buckling will occur elastically in the unstiffened cylindrical shell:

From V.8.1.1, elastic buckling will occur if the following equation is satisfied:

$$\left(\frac{D}{t_{s\min}}\right)^{0.75}\left[\left(\frac{H_{TS}}{D}\right)\left(\frac{F_y}{E}\right)^{0.5}\right] \geq 0.00675$$

$\left(\frac{75}{0.3125}\right)^{0.75}\left[\left(\frac{43.54}{75}\right)\left(\frac{36}{30{,}000}\right)^{0.5}\right] = 1.23 \geq 0.19$, thus buckling will be elastic.

NOTE This value should be recalculated, if necessary, after selection of final shell thickness.

4) Calculate the minimum shell thickness required for the combined loading from design external pressure and wind:

From V.8.1.3, the required minimum shell thickness is calculated as follows:

$$t_{s\min} \geq \frac{1.23(\psi H_{TS}P_s)^{0.4}\ D^{0.6}}{(E)^{0.4}}$$

where

P_s is the greater of 1) the specified design external pressure excluding wind or 2) W + 0.4P_e, where W is the specified design wind pressure, lb/ft^2;

P_s = 0.6 lb/in^2 = 86.4 lb/ft^2 or 31 + 0.4 (86.4) = 65.6 lb/ft^2.

$$t_{s\min} \geq \frac{1.23(3 \times 43.54 \times 86.4)^{0.4}\,75^{0.6}}{(30{,}000{,}000)^{0.4}} = 1.35 \text{ in.}$$

$t_{s\min} \geq 0.698$ in.

$\psi = 3.0$

5) Calculate the transformed shell height:

Course Number	Actual Shell Course Height (ft)	Thickness (in.)	Transformed Shell Course Height * (ft)
1	8	0.3125	8.00
2	8	0.3125	8.00
3	8	0.3125	8.00
4	8	0.3125	8.00
5	8	0.328	7.09
6	8	0.395	4.45
Sum =	48 ft	Sum =	43.54 ft

* For example, the transformed height of No. 5 shell course = $(0.3125/.328)^{2.5}(8) = 7.09$ ft (see V.8.1.4.b)

The required minimum thickness is greater than the available thickness and the shell must be stiffened.

6) Calculate the maximum spacing of intermediate stiffeners:

From V.8.2.1.2,

$$H_{Safe} = \frac{0.6(t_{smin})^{2.5}(E)}{\psi D^{1.5}(P_s)}$$

$$H_{Safe} = \frac{0.6(0.3125)^{2.5}(30{,}000{,}000)}{3(75)^{1.5}(86.4)}$$

$H_{Safe} = 5.84$ ft

7) Calculate the number of intermediate stiffeners required, N_s, based on H_{Safe}:

From V.8.2.1.3,

$N_s + 1 = H_{TS} / H_{Safe}$

$N_s + 1 = 43.54 / 5.84 = 7.46$

$N_s = 7$

Transposed spacing for 7 equally spaced stiffeners = 43.54 / 8 = 5.44 ft

8) Calculate the intermediate stiffener spacing for the non-uniform shell thickness:

From V.8.2.2.2,

Intermediate stiffener spacing on 0.3125-in. shell plate is,

$L_s = H_{Safe} = 5.84$ ft

Intermediate stiffener spacings on 0.328 in. and 0.395 in. shell plate are,

$L_s = [H_{\text{Safe}}](t_{sx}/t_{smin})^{2.5}$

$L_s = [5.84](0.328/0.3125)^{2.5} = 6.59$ ft

$L_s = [5.84](0.395/0.3125)^{2.5} = 10.49$ ft

For equal transposed width we would like to locate 5 stiffeners on 0.3125 in. shell at spacing = 5.44 ft. However, this causes the 3rd stiffener (location = 5.44 ft × 3 = 16.32 ft) to be closer to the horizontal shell seam than we would prefer. Therefore, we will try to locate the 5 stiffeners on the 0.3125 in. shell at spacing = 5.75 ft (must be less than or equal to L_S = 5.84 ft).

Locate the 6th stiffener as follows:

Available 0.3125-in. shell plate = (4 × 8 ft) – (5 × 5.75 ft) = 3.25 ft

Maximum length of 0.328-in. shell = (5.84 – 3.25) × (0.328 / 0.3125)$^{2.5}$ = 2.92 ft

6th stiffener must be located no more than 2.92 ft on 0.328-in. shell. Stiffener can be located 1.5 ft on 0.328-in. shell

Location of 6th stiffener = 32 + 1.5 = 33.5 ft from top of tank

Locate the 7th stiffener as follows:

Available 0.328-in. shell = (5 × 8) – 33.5 = 6.5 ft

Maximum spacing on 0.328-in. shell = L_s = 6.59 ft

To keep stiffener away from horizontal shell seam, locate stiffener less than 6.59 ft.

Location of 7th stiffener = 33.5 + 5.75 = 39.25 ft

Check the remaining unstiffened shell:

Difference between actual and transformed shell height = 48 – 53.55 = 4.45 ft

Length of 0.328-in. shell below stiffener = 40 – 39.25 = 0.75 ft

Transformed shell stiffener spacing = 0.75 × (0.3125/0.328)$^{2.5}$ + 8.0 × (0.3125/0.395)$^{2.5}$ = 5.12 ft. Must be less than or equal to 5.84 ft (H_{Safe}) - OK

9) If fewer stiffeners and thicker shell plates is a more economical solution, the design can be adjusted as follows:

Assume, for this example, a uniform shell thickness equal to the thickness of the lowest shell course, i.e. t_{avg} = 0.395 in.

H_{safe} is then calculated as follows:

$$H_{\text{safe}} = \frac{0.6(0.395)^{2.5}(30{,}000{,}000)}{3(75)^{1.5}(733.36)(86.4)}$$

$H_{\text{safe}} = 10.48$ ft

For t_{avg} = 0.395 in., H_{TS} is recalculated to be equal to 48 ft.

The number of stiffeners required is:

$$N_s + 1 = 48 / 10.48 = 4.58;\ N_s = 4$$

Actual spacing for 4 stiffeners = 48 / 5 = 9.6 ft

10) Calculate the number of buckling waves:

From V.8.2.2.1,

$$N^2 = \sqrt{\frac{5.33D^3}{t_{s\min}L_s^2}} \le 100;\ L_s = (L_1 + L_2)/2 = (9.6 + 9.6)/2 = 9.6\,\text{ft}$$

$$N^2 = \sqrt{\frac{5.33(75)^3}{(0.395)(9.6)^2}} = 249 > 100;\ N = > 10, \text{ therefore use } 10$$

11) Calculate the radial load on a circumferential stiffener placed 9.6 ft from the top of the shell.

From V.8.2.2.3, the radial load is calculated as follows:

$$Q = \frac{P_s L_s}{12};\ \text{where } P_s = 86.4\ \text{lb/ft}^2$$

$$Q = \frac{(86.4)(9.6)}{12} = 69.1\ \text{lb/in.}$$

12) Calculate the total contributing shell width acting with the intermediate stiffener:

From V.8.2.2.4,

$$2 \times w_{\text{shell}} = 2 \times 1.47\sqrt{Dt_{\text{shell}}};\ \text{where } t_{shell} = 0.395\ \text{in.}$$

$$2 \times 1.47\sqrt{(75)(0.395)};\ 16.0\ \text{in.}$$

13) Calculate the required moment of inertia of the intermediate stiffener region:

From V.8.2.2.5, the required moment of inertia is calculated as follows:

$$I_{\text{reqd}} = \frac{648QD^3}{E(N^2 - 1)}$$

$$I_{\text{reqd}} = \frac{648(69.1)(75)^3}{30{,}000{,}000(100 - 1)}$$

$$I_{\text{reqd}} = 6.36\ \text{in.}^4$$

14) Calculate the total area required in the intermediate stiffener region:

From V.8.2.2.6.1, the required area is calculated as follows:

$$A_{\text{reqd}} = \frac{6QD}{f}$$

$$A_{\text{reqd}} = \frac{6(69.1)(75)}{(14,400)}$$

$$A_{\text{reqd}} = 2.16 \text{ in.}^2$$

15) Calculate the required area of the stiffener section:

From V.8.2.2.6.2, the required area is calculated as follows:

$$A_{\text{stiff}} = A_{\text{reqd}} - 2.94 t_{\text{shell}} \sqrt{D t_{\text{shell}}}$$

$$A_{\text{stiff}} = 2.16 - 2.94(0.395)\sqrt{(75)(0.395)}$$

$A_{\text{stiff}} = -4.2$ in.^{2}; the stiffener section area must be ≥ 1.08 sq. in. ($= {}^1/_2 \times A_{\text{reqd}}$)

Select a rolled section that will satisfy the area and inertia requirements. By inspection, since the stiffener spacing is constant, the section selected is adequate for all 4 stiffeners.

16) Calculate the required properties of the top stiffener:

From V.8.2.3, the contributing distance of the cylindrical shell is calculated as follows:

$$W_{\text{shell}} = 1.47\sqrt{D t_{s1}}$$

$$W_{\text{shell}} = 1.47\sqrt{(75)(0.395)}$$

$$W_{\text{shell}} = 8.0 \text{ in.}$$

From V.8.2.3.1, the radial load on the top stiffener is calculated as follows:

$$V_1 = \frac{P_s H}{48}$$

$$V_1 = \frac{86.4(48)}{48}$$

$$V_1 = 86.4 \text{ lb/in.}$$

From V.8.2.3.2, the required moment of inertia of the top stiffener is calculated as follows:

$$I_{\text{reqd}} = \frac{684 V_1 D^3}{E(N^2 - 1)}$$

$$I_{\text{reqd}} = \frac{684(86.4)(75)^3}{30{,}000{,}000(99)}$$

$$I_{\text{reqd}} = 8.39 \text{ in.}^4$$

From V.8.2.3.3.1, the required area of the top stiffener region is calculated as follows:

$$A_{\text{reqd}} = \frac{6 V_1 D}{f}$$

$$A_{\text{reqd}} = \frac{6(86.4)(75)}{21{,}600}$$

$$A_{\text{reqd}} = 1.80 \text{ sq. in.}$$

From **V.8.2.3.3.2**, the required area of the top stiffener section is calculated as follows:

$$A_{\text{stiff}} = A_{\text{reqd}} - t_{s1} X_{\text{shell}} - t_{\text{dome}} X_{\text{dome}}$$

$A_{\text{stiff}} = 1.80 - (0.395)(8.0) - (0.529)(11.7) = -7.55$ in.

The stiffener section area must be ≥ 0.90 sq. in. ($= {}^1/_2 \times A_{\text{total}}$)

Select a rolled section that will satisfy the area and inertia requirements.

17) Calculate the required properties of the bottom stiffener region:

From V.8.2.3, the contributing distance of the cylindrical shell is calculated as follows:

$$W_{\text{shell}} = 1.47\sqrt{D t_{sn}}$$

$$W_{\text{shell}} = 1.47\sqrt{(75)(0.395)}$$

$$W_{\text{shell}} = 8.0 \text{ in.}$$

From V.8.2.3.2, the required moment of inertia of the bottom stiffener is calculated as follows:

$$I_{\text{reqd}} = \frac{684 V_1 D^3}{E(N^2 - 1)}$$

$$I_{\text{reqd}} = \frac{684(86.4)(75)^3}{30{,}000{,}000(99)}$$

$$I_{\text{reqd}} = 8.39 \text{ in.}^4$$

From V.8.2.3.3.1, the required area of the bottom stiffener region is calculated as follows:

$$A_{\text{reqd}} = \frac{6V_1D}{f}$$

$$A_{\text{reqd}} = \frac{6(86.4)(75)}{21{,}600}$$

$$A_{\text{reqd}} = 1.80 \text{ sq. in.}$$

From V.8.2.3.3.2, the required area of the bottom stiffener section is calculated as follows:

$$A_{\text{stiff}} = A_{\text{reqd}} - t_{sn}X_{\text{shell}} - t_bX_{\text{btm}}$$

$$A_{\text{stiff}} = 1.80 - (0.395)(8.0) - (0.375)(6.0) = -3.61 \text{ in.}$$

The contributing portion of the shell-to-bottom joint has a calculated moment of inertia of 20.2 in.^{4} and will satisfy the area and inertia requirements. Thus, an additional stiffener is not necessary.

V.11 Technical Basis of This Annex

The organization of this Annex was modeled after a proprietary DuPont Standard SG 11.4 S. API appreciates DuPont's consent to utilize their standard as a model without any restriction or reservation to develop this Annex. The equations prescribed in this Annex were generally extracted from the same proprietary standard and are based on the same fundamental equations from various public domain references used to develop the proprietary standard. However, where appropriate, the nomenclature was changed to be consistent with API 650. Some equations have been modified from the proprietary standard to be consistent with API 650 safety factors or other design considerations. For example, some equations have been modified to be consistent with Reference 2. Where necessary, equations have been added for consistency with API 650 design principles, such as incorporation of the transformed shell method.

V.12 Annex V References

[1] DuPont Corporate Engineering Standard SG11.4S, *Field Erected Storage Tank Design Procedures*, Section 5, External Pressure Design.

[2] API Publication, *Stability of API Standard 650 Tank Shells*, Raymund V. McGrath.

[3] The Structural Research Council (SSRC), *Guide to Stability Design Criteria for Metal Structures*, Section 14.3.5.

[4] Code Case 2286, "Alternative Rules for Determining Allowable Compressive Stresses for Cylinders, Cones, Spheres and Formed Heads," Cases of ASME *Boiler and Pressure Vessel Code*.

[5] Welding Research Council Bulletin 406, "Proposed Rules for Determining Allowable Compressive Stresses for Cylinders, Cones, Spheres and Formed Heads," C. D. Miller and K. Mokhtarian.

[6] American Society of Mechanical Engineers (ASME) *Boiler and Pressure Vessel Code*, Section VIII, Division 1.

[7] American Iron & Steel Institute (AISI) Publication, *Steel Plate Engineering Data, Volume 2*.

[8] ASME Paper 65-MET-15, “Theoretical and Experimental Study of Steel Panels in Which Membrane Tension is Developed,” by J. S. McDermott.

[9] Machine Design Magazine, December 9, 1976, “Stress Analysis of Pressurized Panels,” by J. A. Martinelli.

--`,,```,,,,````,,,,`,,,,,,,,```,,,,-`-`,,`,,`,`,,`---

Annex W
(normative)

Commercial and Documentation Recommendations

This annex provides a number of design options requiring decisions by the Purchaser; standard requirements; recommendations; and information that supplements the basic standard. This annex becomes a requirement only when the Purchaser specifies an option covered by this annex or specifies the entire annex.

- The following commercial and documentation recommendations apply to all tanks when specified by the Purchaser on the Data Sheet.

• W.1 Document Submittals and Review

• W.1.1 General

1) Technical documents listed below shall be submitted by the Manufacturer for review by the Purchaser at specified times during a project. Additional documents may be required and shall be a matter of agreement between the Purchaser and the Manufacturer. Submittals and reviews shall be in accordance with contractual schedule agreements. All documents shall be in reproducible form agreeable to the Purchaser.

2) Unless specified otherwise by the Purchaser, the minimum required content of the technical documentation packages shall be as described in this Annex.

• W.1.2 Quotation or Bid Document Package

1) All quotations shall be submitted in accordance with this standard and Purchaser's requirements listed in the Data Sheet. In addition, a second quotation containing alternates to Purchaser's requirements may be quoted for Purchaser's consideration provided the alternates are clearly marked as such and are completely described in that bid.

2) The Manufacturer shall mark and return the Purchaser's previously prepared Data Sheet. Some entries will not be determined until completion of negotiations and/or completion of the detailed design. Such entries may remain blank for this submittal. The bid shall include the design wind speed and design snow load that will be used in the design by the Manufacturer.

3) The Manufacturer shall provide a list of all engineered accessories being purchased from suppliers, indicating the Manufacturer, and model or part number. Alternatively, when a specific Manufacturer is not known at the time of bidding, a list of Manufacturer-approved suppliers may be submitted. Excluded from the list requirement are commodities such as plate, pipe, flanges, and bolts. Included in the list are items such as floating roofs, dome roofs, roof seals, pressure vents, gauges, and instrumentation. Also, see C.1.1.

• W.1.3 Design Review Document Packages

Unless specified otherwise, a Purchaser's review of Manufacturer's design calculations and general arrangement drawings is required before the order of materials. Unless specified otherwise, the Purchaser's review of the documents listed in Items 3 through 7 below is required prior to the start of fabrication. Work may begin following conclusion of any negotiations generated by the review process. A copy of the review packages with any annotations including nozzle size, orientations, projections, placement and elevations of ladders, platforms, stairs, and attachments, etc., shall be returned to the Manufacturer. The Manufacturer shall promptly revise/update the drawings, calculations, and information on the **Data Sheet** showing all review-generated changes and shall submit copies to the Purchaser. The Design Review Document shall consist of at least the following.

1) Manufacturer's design calculations as described in W.2 and structural loads for foundation design.

2) General arrangement drawings with complete material specification.

3) Detailed fabrication drawings.

4) Welding procedure specifications (WPSs) and procedure qualification records (PQRs). This shall include weld hardness criteria when required by the Purchaser. Review of duplicate weld procedures for multiple tanks is not required when written permission is received from the Purchaser.

5) Heat treatment procedures (if required).

6) Nondestructive examination procedures and testing procedures.

7) Description of proposed test gaskets (see 4.9), including material properties, dimensions, and design characteristics.

W.1.4 Interim Documents During Construction

The Manufacturer shall promptly submit revised documents describing any design or construction changes to the Purchaser. Copies of Material Test Reports applicable to components listed in 4.2.10.1 shall be forwarded to the Purchaser upon receipt of the reports.

W.1.5 Post-Construction Document Package

Upon completion of construction and testing, copies of a Manufacturer's data book shall be supplied in the quantities specified in the contract. Each copy shall contain at least the documents listed below.

1) Final general arrangement and detail fabrication drawings, marked "as-built" by the Manufacturer, complete with dimensions and data, with complete materials specification and parts list.

2) Design calculations described in W.2.

3) Copies of Material Test Reports applicable to shell plates and annular plates.

4) Reports of the results of all tests including weld hardness (when weld hardness criteria are specified), and reports of all nondestructive examinations. Radiographic films shall also be included. For tank pressure test data, include results and duration of pressure test(s), test water level, fill rate, imposed pneumatic pressure, hold times, drain rate, etc.

5) Shell and bottom elevation measurements for hydro-test.

6) Nameplate facsimile.

7) Manufacturer's certification per Figure 10.2.

8) The **Data Sheet** reflecting as-built conditions.

9) A drawing that lists the following for each shell course:

a) the required shell thicknesses for both the design condition (including corrosion allowance) and the hydrostatic test condition;

b) the nominal thickness used;

c) the material specification;

d) the allowable stresses.

10) Nominal thicknesses used for materials other than shell plates.

11) Handling criteria and rigging instructions (for shop-built tanks only).

W.2 Manufacturer's Calculations

All manual calculations shall include relevant formulas and source paragraphs in this standard or in other specifications or engineering practices, values used in the formulas, calculated results, and acceptance criteria used. Where a computer program performs design calculations, a program description shall be given, including name and version of the program, program limitations and assumptions used, and a brief description of what the program does. These calculations and/or computer programs shall address at least the following.

1) Determination of design thicknesses for all pressure boundary elements to satisfy all specified loading conditions, which may include contents, pressure, partial vacuum, dead loads, live loads, snow loads, rain loads, roof flotation, dike or flood plain partial submergence, wind, and seismic activity.

2) Overturning check and anchorage due to wind forces, seismic forces, and internal pressure, if applicable.

3) Seismic design requirements (e.g. base shear, longitudinal compression, sliding friction resistance checks, overturning moment checks, and anchorage), if applicable.

4) Shell stability checks to determine whether shell stiffeners or increased shell course thicknesses will be required.

• 5) Unless specified otherwise by the Purchaser, whenever the tank diameter exceeds 36 m (120 ft), shell stiffness coefficients, maximum unrestrained radial deflection, angle of rotation of bottom course shell nozzles, and the nomographs for moments and forces that these nozzles can safely sustain from connected piping shall be provided in accordance with provisions of Annex P. Alternate analysis techniques, such as the finite element method, may also be used to satisfy this requirement.

• 6) Any additional calculations specified by the Purchaser to show compliance with this standard and any Annexes invoked.

W.3 Manufacturer's Drawing Contents

All Manufacturer's drawings shall be thoroughly checked for accuracy and completeness before sending for Purchaser review. Manufacturer's drawing(s) shall show, as a minimum, the following information.

1) An updated list of drawings for each tank shall be resubmitted each time drawings are revised and reissued.

• 2) Identification of the storage tank as designated by the Purchaser.

3) Reference to applicable practices, standards, specifications, details, and associated drawings and sketches.

4) Materials of construction, designated corrosion allowance(s), and gasket specifications.

5) Extent of postweld heat treatments.

6) Extent of radiography to be applied to bottom, shell, and roof butt-welds.

7) Shell design joint efficiencies, for Annex A, Annex J, and Annex S.

8) Complete details and dimensions of the tank, including external and internal attachments and appurtenances supplied by Manufacturer and sub-contractors.

9) Bottom slope.

10) Nominal plate thicknesses for shell, roof, reinforcement, and bottom.

11) Location of all welded seams. All welds shall be either pictorially detailed or identified by use of the standard welding symbols of ANSI/AWS A2.4. Welding procedures shall be listed for each weld. A “weld map” may be used if it clearly indicates the weld procedure specification used for every joint.

12) For flanges other than those conforming to ASME B16.5 or ASME B16.47, and marked accordingly, show all dimensions and finish of flange face.

13) Facsimile of nameplate with data to be stamped thereon with location and details of fabrication of nameplate bracket.

14) Empty, operating, and test weight of tank.

15) Loads on foundation as also shown on the **Data Sheet**, Line 13.

16) Foundation plans and construction details (if supplied by the Manufacturer or the sub-contractor).

W.4 Bids for Floating Roofs

• **W.4.1** Bids for tanks having floating roofs shall contain sufficient engineering data, including material specifications for both metallic and non-metallic components, nominal thicknesses, and sufficient information (see C.3.4.1 and C.3.4.2 or H.2.1, as applicable) to enable the Purchaser to verify that the bidder has considered all specified design requirements.

W.4.2 Manufacturer shall list in the quotation all roof accessories furnished and included in the base price of the roof. If any accessories are purchased from other suppliers, the Manufacturer shall provide that supplier’s name and the model or part number.

W.4.3 Manufacturer shall state the lowest and highest operating level of roof in the quotation.

W.4.4 Manufacturer shall clearly describe the extent of electrical grounding and shunts included as a part of the floating roof design.

W.4.5 Manufacturer shall provide a cross-section of all seals showing materials and complete details of construction with the bid.

W.4.6 The Manufacturer shall submit with the bid the minimum and the maximum allowable annular space between the roof and shell, as well as the maximum and minimum annular space the proposed roof seal system can accommodate.

W.4.7 Manufacturer shall specify size, number, and type of drains with the quotation (external roof only).

W.4.8 The bid shall state if a wind skirt, a top-shell extension, or overflows will be required for proper functioning of the roof seal (external roof only).

W.4.9 The Manufacturer of the external floating roof shall prepare and submit to the Purchaser the following calculations.

- **W.4.9.1** Calculations showing that the roof design complies with the buoyancy requirements of C.3.4.1a, for both single-deck and double-deck roofs using the smaller of the specific gravity in C.3.4.1 (0.7), or the minimum specific gravity of the product specified on the Data Sheet, Line 5.

W.4.9.2 Calculations showing that the roof design complies with the punctured compartment loading condition for single-deck pontoon roofs and for double deck roofs as specified in C.3.4.1b.

W.4.9.3 Calculations showing that the design of the roof and roof supports satisfies C.3.10.2.

W.4.10 The Manufacturer of the internal floating roof shall prepare and submit to the Purchaser the following calculations, considering internal floating roof deflections and stresses for each of the load conditions required by Annex H. All calculations for the floating condition shall be based upon the design specific gravity (per H.4.2.1.1).

W.4.10.1 Calculations showing that the roof design complies with the buoyancy requirements of H.4.2.1.

W.4.10.2 Calculations showing that the roof design complies with the punctured compartment loading condition for single-deck pontoon roofs and for double deck roofs as specified in H.4.2.3.

W.4.10.3 Calculations showing that the design of the roof and roof supports in the landed condition satisfies H.4.2.2.2.

W.4.11 The internal floating roof Manufacturer shall specify the internal floating roof weight and total flotation displacement provided based on a flotation level for design specific gravity per H.4.2.1.

• W.5 Jobsite Responsibilities

Unless otherwise specified by the Purchaser, the Manufacturer shall furnish all labor, tools, equipment, supplies, materials, utilities (including power for welding), storage, and personnel services necessary for, and reasonably incidental to, the delivery of materials to the site, the construction of the tank(s), and the removal of surplus and scrap materials from the job site. See the **Data Sheet** (see Line 14) for the Manufacturer's additional post-hydro-test responsibilities. The Purchaser shall furnish and dispose of the water for hydro-testing the tank from the tie-in points as designated on the Data Sheet, Line 14.

Annex X
(normative)

Duplex Stainless Steel Storage Tanks

X.1 Scope

X.1.1 This Annex covers materials, design, fabrication, erection, and testing requirements for vertical, cylindrical, aboveground, closed- and open-top, welded, duplex stainless steel storage tanks constructed of material grades 2205 (UNS S31803), 2003 (UNS S32003), 2101 (UNS S32101), 2202 (UNS S32202), 2205 (UNS S32205), 2304 (UNS S32304), 255 (UNS S32550), 255+ (UNS S32520), 2507 (UNS S32750), and Z100 (UNS S32760). This Annex does not cover stainless steel clad plate or strip lined construction.

X.1.2 This Annex applies only to tanks in non-refrigerated services with a maximum design temperature not exceeding 260 °C (500 °F) and a design metal temperature of –40 °C (–40 °F). Ambient temperature tanks (non-heated) shall have a design temperature of 40 °C (100 °F). It is cautioned that exothermic reactions occurring inside unheated storage tanks can produce temperatures exceeding 40 °C (100 °F).

X.1.3 The minimum thicknesses specified in this Annex are corroded thicknesses unless otherwise stated.

X.1.4 This Annex states only the requirements that differ from the basic rules in this standard. For requirements not stated, the basic rules must be followed.

X.2 Materials

X.2.1 Selection and Ordering

X.2.1.1 Materials shall be in accordance with Table X.1.

• **X.2.1.2** Selection of the type/grade of duplex stainless steel depends on the service and environment to which it will be exposed. The Purchaser shall specify the type/grade.

X.2.1.3 External structural attachments may be carbon steels meeting the requirements of Section 4 of this standard, providing any permanent attachments are protected from corrosion. (This does not include shell, roof, or bottom openings and their reinforcement.) Carbon steel attachments (e.g. clips for scaffolding) shall not be welded directly to any internal surface of the tank.

X.2.2 packaging

Packaging duplex stainless steel for shipment is important to maintain its corrosion resistance. Precautions to protect the surface of the material depend on the surface finish supplied and may vary among Manufacturers. Standard packaging methods may not be sufficient to protect the material from normal shipping damage. If the intended service requires special precautions, the Purchaser shall specify special instructions.

X.2.3 Qualification Testing

• **X.2.3.1** Tests for detecting detrimental intermetallic phases for ASTM A923 are required from one plate per heat treat lot as follows:

UNS S32205/S31803	Methods B & C
UNS S32202	Method B[1]
UNS S32304	Method B[1]

Table X.1—ASTM Materials for Duplex Stainless Steel Components

	UNS S31803	UNS S32003	UNS S32101	UNS S32202	UNS S32205	UNS S32304	UNS S32550	UNS S32520	UNS S32750	UNS S32760
	2205	2003	2101	2202	2205	2304	255	255+	2507	Z100
Plates and Structural Members										
A240	X	X	X	X	X	X	X	X	X	X
A276	X		X	X	X	X	X			X
Tube or Pipe Seamless and Welded										
A789	X			X	X	X	X		X	X
A790	X			X	X	X	X		X	X
A928	X			X	X	X	X	X	X	X
Forgings and Fittings										
A182	X			X	X				X	X
A815	X			X	X					X
Bolting and Bars										
A479	X		X	X	X		X		X	X

NOTE 1 Unless otherwise specified by the purchaser, plate, sheet, or strip shall be furnished with a No. 1 finish and shall be hot-rolled, annealed, and descaled.

NOTE 2 Carbon steel flanges and/or stub ends may be used by agreement between the purchaser and manufacturer, providing the design and details consider the dissimilar properties of the materials used and are suitable for the intended service.

NOTE 3 Castings shall not be used unless specified by the purchaser. If specified, castings shall meet ASTM A890 and shall be inspected in accordance with ASME Boiler and Pressure Vessel Code, Section VIII, Division 1, Appendix 7.

NOTE 4 All bars in contact with the product shall be furnished in the hot-rolled, annealed, and descaled condition.

NOTE 5 Other bolting materials may be used by agreement between the purchaser and manufacturer.

UNS S32101	Method B[2]
UNS S32003	Method B[1]
UNS S32750	Method B[1] & C
UNS S32550/S32520	Method B[1] & C
UNS S32760	Method B[1] & C[3]

[1]B test values to be agreed upon between Purchaser and Manufacturer but not less than 54J (40 ft-lbf).

[2]B test values to be agreed upon between Purchaser and Manufacturer but not less than 27J (20 ft-lbf)

[3]C test values to be agreed upon between Purchaser and Manufacturer.

X.2.3.2 Charpy Impact testing per ASME UHA-51 at design metal temperature is required for:

a) components named in 4.2.10.1 in all thicknesses, when the design temperature is between –29 °C and –40°C (–20 °F and –40 °F); and

b) components named in 4.2.10.1 that have thickness greater than 10 mm ($^3/_8$ in.) for all temperatures.

ASTM A923 Practice B test results may be used to fulfill these requirements provided the lateral expansion is measured and reported.

X.3 Design

• X.3.1 Bottom Plates

All bottom plates shall have a nominal corroded thickness of not less than 5 mm ($^3/_{16}$ in.). Unless otherwise approved by the Purchaser, all rectangular and sketch plates (bottom plates on which the shell rests that have one end rectangular) shall have a nominal width of not less than1200 mm (48 in.).

X.3.2 Annular Bottom Plates

Butt-welded annular bottom plates meeting the requirements of 5.5.2 through 5.5.5 are required when either the bottom shell course maximum product stress is greater than 160 MPa (23,200 lbf/in.^{2}) or the bottom shell course maximum test stress is greater than 172 MPa (24,900 lbf/in.^{2}).

X.3.3 Shell Design

X.3.3.1 Shell Minimum Thickness

The required nominal shell thickness shall not be less than the greatest of the design shell thickness plus corrosion allowance, hydrostatic test shell thickness, or the nominal thickness listed in 5.6.1.1 (note 4 does not apply).

• X.3.3.2 Minimum Plate Widths

Unless otherwise approved by the Purchaser, the shell plates shall have a minimum width of 1200 mm (48 in.).

X.3.3.3 Shell Thickness Calculation

The requirements of 5.6 shall be followed except as modified in X.3.3.3.1 through X.3.3.3.3.

X.3.3.3.1 Allowable stresses for all shell thickness calculation methods are provided in Table X.2a and Table X.2b.

X.3.3.3.2 Annex A is not applicable.

• **X.3.3.3.3** The following formulas for design shell thickness and test shell thickness may alternatively be used for tanks 60 m (200 ft) in diameter and smaller.

In SI units:

$$t_d = (4.9D(H - 0.3)G)/((S_d)(E)) + CA$$

$$t_t = 4.9D(H - 0.3))/((S_t)(E))$$

where

t_d is the design shell thickness, in mm;

t_t is the hydrostatic test shell thickness, in mm;

D is the nominal diameter of tank, in m (see 5.6.1.1);

H is the design liquid level, in m (see 5.6.3.2);

• G is the specific gravity of the liquid to be stored, as specified by the Purchaser;

--```,,,``````,`,,,`,,,,,```,`,,-`-`,,`,,`,`,,`---

E is the joint efficiency, 1.0, 0.85, or 0.70 (see Table X.3);

CA is the corrosion allowance, in mm, as specified by the Purchaser (see 5.3.2);

S_d is the allowable stress for the design condition, in MPa (see Table X.2a and Table X.2b);

S_t is the allowable stress for hydrostatic test condition, in MPa (see Table X.2a and Table X.2b).

In USC units:

$$t_d = (2.6D(H-1)G)/((S_d)(E)) + CA$$

$$t_t = (2.6D(H-1))/((S_t)(E))$$

where

t_d is the design shell thickness, in inches.

t_t is the hydrostatic test shell thickness, in inches.

D is the nominal diameter of tank, in ft (see 5.6.1.1).

H is the design liquid level, in ft (see 5.6.3.2).

G is the specific gravity of the liquid to be stored, as specified by the Purchaser.

E is the joint efficiency, 1.0, 0.85, or 0.70 (see Table X.3).

CA is the corrosion allowance, in inches, as specified by the Purchaser (see 5.3.2).

S_d is the allowable stress for the design condition, in lbf/in.^{2} (see Tables X.2a and X.2b).

S_t is the allowable stress for hydrostatic test condition, in lbf/in.^{2} (see Tables X.2a and X.2b).

X.3.4 Shell Openings

X.3.4.1 The minimum nominal thickness of connections and openings shall be as follows:

Size of Nozzle	Minimum Nominal Neck Thickness
NPS 2 and less	Schedule 80S
NPS 3 and NPS 4	Schedule 40S
Over NPS 4	Schedule 40S but need not be greater than the shell thickness

NOTE Reinforcement requirements of 5.7 must be maintained.

X.3.4.2 Thermal stress relief requirements of 5.7.4 are not applicable.

X.3.4.3 Shell manholes shall be in conformance with 5.7.5.

X.3.4.4 As an alternative to X.3.4.3, plate ring flanges may be designed in accordance with API 620 rules using the allowable stresses given in Table X.2a and Table X.2b.

Table X.2a—Allowable Stresses for Tank Shells (SI)

Alloy	Min Yield	Min Ten	Allowable Stress MPa for Design Temp Not Exceeding (*Sts*)					
	MPa	MPa	40 °C	90 °C	150 °C	200 °C	260 °C	*Si* ambient
S31803	450	620	248	248	239	230	225	266
S32003	450	655	262	231	218	215	212	281
S32101	450	650	260	234	223	215	212	278
S32202	450	655	262	258	226	214	209	281
S32205	450	655	262	234	225	208	191	281
S32304	400	600	240	229	213	205	200	257
S32550	550	760	303	302	285	279	272	325
S32520	550	770	308	270	265	256	251	331
S32750	550	795	318	319	298	279	268	343
S32760	550	750	298	314	259	256	256	319

NOTE 1 *Sts* may be interpolated between temperatures.

NOTE 2 The design stress shall be the lesser of 2/5 of the minimum tensile strength or 2/3 of the minimum yield strength.

NOTE 3 The hydrotest stress shall be the lesser of 3/7 of the minimum tensile strength or 3/4 of the minimum yield strength.

NOTE 4 For dual certified materials, S31803/S32205 and S32550/S32520, use the allowable stress of the grade specified by the purchaser.

Table X.2b—Allowable Stresses for Tank Shells (USC)

Alloy	Min Yld	Min Ten	Allowable Stress PSI for Design Temp Not Exceeding (*Sts*)					
	lbf/in^2	lbf/in^2	100 °F	200 °F	300 °F	400 °F	500 °F	*Si* ambient
S31803	65,000	90,000	36,000	36,000	34,700	33,400	32,600	38,600
S32003	65,000	95,000	38,000	33,600	33,600	31,200	30,700	40,800
S32101	65,000	94,000	37,600	34,000	32,400	31,200	30,700	40,300
S32202	65,000	94,000	38,000	37,000	32,900	31,000	30,300	40,700
S32205	65,000	95,000	38,000	34,000	32,700	30,000	28,700	40,800
S32304	58,000	87,000	34,800	33,200	30,900	29,700	29,000	37,300
S32550	80,000	110,000	44,000	43,800	41,400	40,400	39,400	47,200
S32520	80,000	112,000	44,800	39,200	38,400	37,200	36,400	48,000
S32750	80,000	116,000	46,400	46,200	43,200	40,500	38,900	49,800
S32760	80,000	108,000	43,200	39,200	37,600	37,200	37,200	46,300

NOTE 1 *Sts* may be interpolated between temperatures.

NOTE 2 The design stress shall be the lesser of 2/5 of the minimum tensile strength or 2/3 of the minimum yield strength.

NOTE 3 The hydrotest stress shall be the lesser of 3/7 of the minimum tensile strength or 3/4 of the minimum yield strength.

NOTE 4 For dual certified materials, S31803/S32205 and S32550/S32520, use the allowable stress of the grade specified by the purchaser.

Table X.3—Joint Efficiencies

Joint Efficiency	Radiographic Requirements
1	Radiograph per 8.1.2
0.85	Radiograph per X.4.14.1.1
0.7	No radiography required

X.3.4.5 Allowable weld stresses for shell openings shall conform to 5.7.2.7 except S_d = the maximum allowable design stress (the lesser value of the base materials joined) permitted by Table X.2a and Table X.2b.

X.3.5 Roof Manholes

All duplex stainless steel components of the roof manhole shall have a nominal thickness of not less than 5 mm ($^3/_{16}$ in.).

X.3.6 Annex F—Modifications

In F.2, the shell thickness shall be as specified in X.3.3 except that the pressure P [in kPa (in. of water)] divided by 9.8G (12G) shall be added to the design liquid height in meters (ft).

X.3.7 Annex M—Modifications

X.3.7.1 Annex M requirements shall be met for duplex stainless steel tanks with design temperatures over 40 °C (100 °F) as modified by X.3.7.2 through X.3.7.7.

X.3.7.2 Allowable shell stress shall be in accordance with Table X.2a and Table X.2b.

X.3.7.3 In M.3.6, the duplex stainless steel structural allowable stress shall be multiplied by the ratio of the material yield strength at the design temperature to the material yield strength at 40 °C (100 °F). (See Table X.4a and Table X.4b for yield strength.)

X.3.7.4 In M.5.1, the requirements of 5.10.5.1 and 5.10.6.1 which are applicable to self supporting roof plate thickness shall be multiplied by the ratio of the material modulus of elasticity at 40 °C (100 °F) to the material modulus of elasticity at the design temperature. (See Table X.5a and Table X.5b for modulus of elasticity.)

X.3.7.5 In M.6 (the equation for the maximum height of unstiffened shell in 5.9.7.1), the maximum height shall be multiplied by the ratio of the material modulus of elasticity at the design temperature to the material modulus of elasticity at 40 °C (100 °F).

X.4 Fabrication and Construction

X.4.1 General

Special precautions must be observed to minimize the risk of loss of the corrosion resistance and toughness of duplex stainless steel. Duplex stainless steel shall be handled so as to minimize contact with iron or other types of steel during all phases of fabrication, shipping, and construction.

The thermal history of the material must also be controlled. The following sections describe the major precautions that should be observed during fabrication, and handling.

Table X.4a—Yield Strength Values in MPa

Alloy	Yield Strength MPa for Design Temp Not Exceeding				
	40 °C	90 °C	150 °C	200 °C	260 °C
S31803	450	396	370	353	342
S32003	450	386	352	331	317
S32101	450	379	351	324	317
S32202	448	387	339	321	314
S32205	450	358	338	319	286
S32304	400	343	319	307	299
S32550	550	484	443	421	407
S32520	550	448	421	400	379
S32750	550	486	446	418	402
S32760	550	455	428	414	400

NOTE 1 Interpolate between temperatures.

NOTE 2 Reference: Table Y-1 of ASME Section II, Part D. or manufacturers' data sheets.

Table X.4b—Yield Strength Values in PSI

Alloy	Yield Strength lbf/in^2 for Design Temp Not Exceeding				
	100 °F	200 °F	300 °F	400 °F	500 °F
S31803	65,000	57,500	51,000	48,000	46,000
S32003	65,000	56,000	51,000	47,000	46,000
S32101	65,000	55,000	49,000	45,000	43,000
S32202	65,000	55,500	49,300	46,500	45,500
S32205	65,000	52,000	49,000	45,000	43,000
S32304	58,000	49,800	46,300	44,500	43,400
S32550	80,000	70,200	64,300	61,000	59,000
S32520	80,000	65,000	61,000	58,000	55,000
S32750	80,000	70,500	64,700	60,700	58,300
S32760	80,000	66,000	62,000	60,000	58,000

NOTE 1 Interpolate between temperatures.

NOTE 2 Reference: Table Y-1 of ASME Section II, Part D. or manufacturers' data sheets.

Table X.5a—Modulus of Elasticity at the Maximum Design Temperature (SI)

Alloy	Modulus of Elasticity in MPa for Design Temperatures Not Exceeding				
	40 °C	90 °C	150 °C	200 °C	260 °C
S31803	198,000	190,000	185,000	180,000	174,000
S32003	209,000	205,000	201,000	197,000	192,000
S32101	198,000	194,000	190,000	185,000	182,000
S32202	198,000	195,000	190,000	186,000	182,000
S32205	198,000	190,000	185,000	180,000	174,000
S32304	198,000	190,000	185,000	180,000	174,000
S32550	209,000	206,000	202,000	198,000	194,000
S32520	209,000	206,000	202,000	198,000	180,000
S32750	202,000	194,000	188,000	180,000	175,000
S32760	199,000	193,000	190,000	185,000	182,000

NOTE 1 Interpolate between temperatures.

Table X.5b—Modulus of Elasticity at the Maximum Design Temperature (USC)

Alloy	Modulus of Elasticity (x 10^6 PSI) for Design Temperatures Not Exceeding				
	100 °F	200 °F	300 °F	400 °F	500 °F
S31803	28.7	27.6	26.8	26.1	25.3
S32300	30.3	29.8	29.2	28.6	27.9
S32101	28.7	28.1	27.5	26.9	26.4
S32202	28.2	28.2	27.5	26.4	26.0
S32205	28.7	27.6	26.8	26.1	25.3
S32304	28.7	27.6	26.8	26.1	25.3
S32550	30.3	29.9	29.3	28.7	28.1
S32520	30.3	29.9	29.3	28.7	26.1
S32750	29.3	28.1	27.2	26.2	25.4
S32760	28.8	28.0	27.6	26.9	26.4

NOTE 1 Interpolate between temperatures.

X.4.2 Storage

Storage should be under cover and well removed from shop dirt and fumes from pickling operations. If outside storage is necessary, provisions should be made for rainwater to drain and allow the material to dry. Duplex stainless steel should not be stored in contact with carbon steel. Materials containing chlorides, including foods, beverages, oils, cleaners and greases, should not come in contact with duplex stainless steel.

X.4.3 Thermal Cutting

X.4.3.1 Thermal cutting of duplex stainless steel shall be by the plasma-arc method or by laser cutting.

• **X.4.3.2** Thermal cutting of duplex stainless steel may leave a heat-affected zone with intermetallic precipitates. This heat-affected zone may have reduced corrosion resistance and toughness unless removed by machining or grinding. Normally the HAZ from thermal cutting is thin enough to be removed by edge preparation machining and adjacent base metal melting during welding. The Purchaser shall specify if the heat-affected zone is to be removed.

X.4.4 Forming

X.4.4.1 Duplex stainless steels shall be formed by a cold or hot forming procedure that is not injurious to the material.

X.4.4.2 Duplex stainless steels may be cold formed. The maximum strain produced by such cold forming shall not exceed 10 % and control of forming spring-back is provided in the forming procedure.

X.4.4.3 Hot forming, if required, may be performed within a temperature range shown in Table X.6a and Table X.6b.

Forming at temperatures between 600 °F (315 °C) and the minimum temperature shown in Table X.6a and Table X.6b is not permitted.

Table X.6a—Hot Forming Temperatures (SI)

Alloy	°C Max	°C Min	°C Min Soaking
S31803	1230	950	1040
S32003	1100	950	1010
S32101	1100	900	980
S32202	1100	1000	1080
S32205	1230	950	1040
S32304	1100	950	980
S32550	1230	1000	1080
S32520	1230	1000	1080
S32750	1230	1025	1050
S32760	1230	1000	1100

Table X.6b—Hot Forming Temperatures (USC)

Alloy	°F Max	°F Min	°F Min Soaking
S31803	2250	1740	1900
S32003	2010	1740	1850
S32101	2010	1650	1800
S32202	2010	1830	1975
S32205	2250	1740	1900
S32304	2010	1740	1800
S32550	2250	1830	1975
S32520	2250	1830	1975
S32750	2250	1875	1920
S32760	2250	1830	2010

X.4.5 Cleaning

X.4.5.1 When the Purchaser requires cleaning to remove surface contaminants that may impair the normal corrosion resistance; it shall be done in accordance with ASTM A380, unless otherwise specified. The Purchaser shall specify any additional cleanliness requirements for the intended service.

X.4.5.2 When welding is completed; flux residues and weld spatter shall be removed mechanically using stainless steel tools.

X.4.5.3 Removal of excess weld metal, if required, shall be done with a grinding wheel or belt that has not been previously used on other metals.

X.4.5.4 Removal of weld heat tint, if required, shall be done using an appropriate pickling product and pickling procedure.

X.4.5.5 Chemical cleaners and pickling solutions used shall not have a detrimental effect on the duplex stainless steel or welded joints and shall be disposed of in accordance with laws and regulations governing the disposal of such chemicals. Thorough rinsing with water and drying shall always follow the use of any chemical cleaners or pickling solutions (see X.4.9).

X.4.6 Blast Cleaning

If blast cleaning is necessary, it shall be done with sharp acicular grains of sand or grit containing not more than 1% by weight iron as free iron or iron oxide. Steel shot or sand previously used to clean non stainless steel materials is not permitted.

X.4.7 Pickling

If pickling of a duplex stainless steel is necessary, an acid mixture of nitric and hydrofluoric acids shall be used. After pickling, the stainless steel shall be thoroughly rinsed with water and dried.

X.4.8 Passivation or Surface Iron Removal

When the Purchaser specifies passivation or surface iron removal, cleaning may be achieved by treatment with nitric or citric acid. Nitric hydrofluoric acid shall be used to remove embedded iron.

X.4.9 Rinsing

X.4.9.1 When cleaning, pickling, or passivation is required, these operations shall be followed immediately by rinsing, not allowing the surfaces to dry between operations. Pickling solutions may require a neutralization treatment before rinsing.

X.4.9.2 Rinse water shall be potable and shall not contain more than 200 parts per million chloride at temperatures below 40 °C (100 °F), or no more than 100 parts per million chloride at temperatures above 40 °C (100 °F) and below 65 °C (150 °F), unless specifically allowed by the Purchaser.

X.4.9.3 Following final rinsing, the equipment shall be completely dried.

X.4.10 Hydrostatic Testing

X.4.10.1 The rules of 7.3.5 apply to hydrostatic testing except that the penetrating oil test in 7.3.5(2) shall be replaced with liquid penetrant examination conducted by applying the penetrant on one side and developer on the opposite side of the welds. The penetrant dwell time must be at least one hour.

X.4.10.2 The materials used in the construction of duplex stainless steel tanks may be subject to pitting, or general corrosion if they are exposed to contaminated test water for extended periods of time. The Purchaser shall specify a minimum quality of test water that conforms to the following requirements.

a) Unless otherwise specified by the Purchaser, water used for hydrostatic testing of tanks shall be potable and treated, containing at least 0.2 parts per million free chlorine.

b) Water shall be substantially clean and clear.

c) Water shall have no objectionable odor (that is, no hydrogen sulfide).

d) Water pH shall be between 6 and 8.3.

e) Water temperature shall be below 50 °C (120 °F).

f) The chloride content of the water shall be below 50 parts per million, unless otherwise allowed by the Purchaser.

X.4.10.3 When testing with potable water, the exposure time shall not exceed 21 days, unless otherwise specified by the Purchaser.

X.4.10.4 When testing with other fresh waters, the exposure time shall not exceed 7 days.

X.4.10.5 Upon completion of the hydrostatic test, water shall be completely drained. Wetted surfaces shall be washed with potable water when non-potable water is used for the test, and completely dried. Particular attention shall be given to low spots, crevices, and similar areas. Hot air drying is not permitted.

X.4.11 Welding

X.4.11.1 Tanks and their structural attachments shall be welded by any of the processes permitted in 7.2.1.1. Galvanized components or components coated with zinc-rich coating shall not be welded directly to duplex stainless steel.

X.4.11.2 Filler metal chemistry shall be as specified by the Purchaser. Proper filler metal selection may be discussed with the materials manufacturer. Dissimilar welds to carbon steels shall use filler metals of E309L or higher alloy content.

X.4.12 Welding Procedure and Welder Qualifications

X.4.12.1 Welding Procedure and Welder Qualification requirements shall be as specified in Section 9. In addition, procedures shall meet the requirements of ASTM A923 Method B and when specified by Purchaser also Method C. Welding Procedure Qualification Records shall document the results of tests required both by Section 9 and by ASTM A923.

X.4.12.2 For any material that has not been assigned a P-number in Table QW-422 of Section IX of the ASME Code, the Welding Procedure and the Welder Qualification shall be developed for that specific material.

X.4.13 Postweld Heat Treatment

Post weld heat treatment of duplex stainless steel materials shall not be performed.

X.4.14 Examination of Welds

X.4.14.1 Radiographic Examination of Butt-Welds

X.4.14.1.1 Radiographic examination of butt-welds shall be in accordance with 6.1 and Table X.3.

X.4.14.1.2 When shell designs use joint efficiency = 0.85, spot radiographs of vertical joints shall conform to 8.1.2.2, Item a, excluding the 10 mm ($^3/_8$ in.) shell-thickness limitation in Item a and excluding the additional random spot radiograph required by Item a.

X.4.14.2 Examination of Welds by Liquid Penetrant Method

The following component welds shall be examined by the liquid penetrant method before the hydrostatic test of the tank.

a) The shell-to-bottom inside attachment weld.

b) All welds of opening connections in tank shell that are not completely radiographed, including nozzle and manhole neck welds and neck-to-flange welds.

c) All welds of attachments to shells, such as stiffeners, compression rings, clips, and other nonpressure parts for which the thickness of both parts joined is greater than 19 mm ($^3/_4$ in.).

d) All butt-welded joints in tank annular plates on which backing strips are to remain.

X.5 Marking

Brazing shall be deleted from 10.1.2.

X.6 Annexes

The following Annexes are modified for use with duplex stainless steel storage tanks.

a) Annex A is not applicable to tanks built to this Annex.

b) Annex C may be used; however, the Purchaser shall identify all materials of construction. The nominal deck thickness using duplex stainless steel shall not be less than 2.5 mm (0.094 in.).

c) Annex F is modified as outlined in X.3.5 of this Annex.

d) Annex H may be used: however the Purchaser shall identify all materials of construction. The nominal deck thickness using duplex stainless steel shall not be less than 2.5 mm (0.094 in.).

e) Annex J may be used, except the nominal shell thickness for all tank diameters shall not be less than 5 mm ($^3/_{16}$ in.).

f) Annex K is not applicable to tanks built to this Annex.

g) Annex M is modified as outlined in X.3.6 of this Annex.

h) Annex N is not applicable.

i) Annex O may be used; however, the structural members of Tables O-1a and O-1b shall be of an acceptable grade of material.

j) All other Annexes may be used without modifications.

Annex Y
(informative)

API Monogram

Y.1 Introduction

The API Monogram Program allows an API Licensee to apply the API Monogram to products.

The use of the Monogram on products constitutes a representation and warranty by the Licensee to purchasers of the products that, on the date indicated, the products were produced in accordance with a verified quality management system and in accordance with an API product specification. The API Monogram Program delivers significant value to the international oil and gas industry by linking the verification of an organization's quality management system with the demonstrated ability to meet specific product specification requirements.

When used in conjunction with the requirements of the API License Agreement, API Specification Q1, including Annex A, defines the requirements for those organizations who wish to voluntarily obtain an API license to provide API monogrammed products in accordance with an API product specification.

API Monogram Program licenses are issued only after an on-site audit has verified that the Licensee conforms to the requirements described in API Q1 in total.

For information on becoming an API Monogram Licensee, please contact API, Certification Programs, 1220 L Street, NW, Washington, DC 20005 or call 202-682-8000 or by email at certification@api.org.

Y.2 API Monogram Marking Requirements

The following marking requirements apply only to those API Licensees wishing to mark their products with the API Monogram.

The complete API Monogram marking consists of the following:

— the letters “API 650”;

— the manufacturer’s API license number;

— the API Monogram;

— the date of manufacture (defined as the month and year when the Monogram is applied by the manufacturer).

THERE'S MORE WHERE THIS CAME FROM

REQUEST A QUOTATION
www.api.org/quote

API Monogram® Licensing Program
Sales: 877-562-5187
(Toll-free U.S. and Canada)
(+1) 202-682-8041
(Local and International)
Email: certification@api.org
Web: www.api.org/monogram

API Quality Registrar (APIQR®)
- ISO 9001
- ISO/TS 29001
- ISO 14001
- OHSAS 18001
- API Spec Q1®
- API Spec Q2®
- API Quality*Plus*®
- Dual Registration

Sales: 877-562-5187
(Toll-free U.S. and Canada)
(+1) 202-682-8041
(Local and International)
Email: certification@api.org
Web: www.api.org/apiqr

API Training Provider Certification Program (TPCP®)
Sales: 877-562-5187
(Toll-free U.S. and Canada)
(+1) 202-682-8041
(Local and International)
Email: tpcp@api.org
Web: www.api.org/tpcp

API Individual Certification Programs (ICP®)
Sales: 877-562-5187
(Toll-free U.S. and Canada)
(+1) 202-682-8041
(Local and International)
Email: icp@api.org
Web: www.api.org/icp

API Engine Oil Licensing and Certification System (EOLCS)
Sales: 877-562-5187
(Toll-free U.S. and Canada)
(+1) 202-682-8041
(Local and International)
Email: eolcs@api.org
Web: www.api.org/eolcs

Motor Oil Matters
Sales: 877-562-5187
(Toll-free U.S. and Canada)
(+1) 202-682-8041
(Local and International)
Email: motoroilmatters@api.org
Web: www.motoroilmatters.org

API Diesel Exhaust Fluid Certification Program
Sales: 877-562-5187
(Toll-free U.S. and Canada)
(+1) 202-682-8041
(Local and International)
Email: apidef@api.org
Web: www.apidef.org

API Perforator Design Registration Program
Sales: 877-562-5187
(Toll-free U.S. and Canada)
(+1) 202-682-8041
(Local and International)
Email: perfdesign@api.org
Web: www.api.org/perforators

API WorkSafe®
Sales: 877-562-5187
(Toll-free U.S. and Canada)
(+1) 202-682-8041
(Local and International)
Email: apiworksafe@api.org
Web: www.api.org/worksafe

API-U™
Sales: 877-562-5187
(Toll-free U.S. and Canada)
(+1) 202-682-8041
(Local and International)
Email: training@api.org
Web: www.api-u.org

API Data®
Sales: 877-562-5187
(Toll-free U.S. and Canada)
(+1) 202-682-8041
(Local and International)
Service: (+1) 202-682-8042
Email: data@api.org
Web: www.APIDataNow.org

API Publications
Phone: 1-800-854-7179
(Toll-free U.S. and Canada)
(+1) 303-397-7956
(Local and International)
Fax: (+1) 303-397-2740
Web: www.api.org/pubs
global.ihs.com

API Standards
Sales: 877-562-5187
(Toll-free U.S. and Canada)
(+1) 202-682-8041
(Local and International)
Email: standards@api.org
Web: www.api.org/standards

energy API®
AMERICAN PETROLEUM INSTITUTE

AMERICAN PETROLEUM INSTITUTE

1220 L Street, NW
Washington, DC 20005-4070
USA

202-682-8000

Additional copies are available online at www.api.org/pubs

Phone Orders:	1-800-854-7179	(Toll-free in the U.S. and Canada)
	303-397-7956	(Local and International)
Fax Orders:	303-397-2740	

Information about API publications, programs and services is available on the web at www.api.org.

Product No. C65012